EPRI

Flue Gas Desulfurization Equipment Issues Guidelines

Technical Report

Flue Gas Desulfurization Equipment Issues Guidelines

1004025

Final Report, October 2001

EPRI Project Managers
R. Rhudy
C. Dene

EPRI • 3412 Hillview Avenue, Palo Alto, California 94304 • PO Box 10412, Palo Alto, California 94303 • USA
800.313.3774 • 650.855.2121 • askepri@epri.com • www.epri.com

DISCLAIMER OF WARRANTIES AND LIMITATION OF LIABILITIES

THIS DOCUMENT WAS PREPARED BY THE ORGANIZATION(S) NAMED BELOW AS AN ACCOUNT OF WORK SPONSORED OR COSPONSORED BY THE ELECTRIC POWER RESEARCH INSTITUTE, INC. (EPRI). NEITHER EPRI, ANY MEMBER OF EPRI, ANY COSPONSOR, THE ORGANIZATION(S) BELOW, NOR ANY PERSON ACTING ON BEHALF OF ANY OF THEM:

(A) MAKES ANY WARRANTY OR REPRESENTATION WHATSOEVER, EXPRESS OR IMPLIED, (I) WITH RESPECT TO THE USE OF ANY INFORMATION, APPARATUS, METHOD, PROCESS, OR SIMILAR ITEM DISCLOSED IN THIS DOCUMENT, INCLUDING MERCHANTABILITY AND FITNESS FOR A PARTICULAR PURPOSE, OR (II) THAT SUCH USE DOES NOT INFRINGE ON OR INTERFERE WITH PRIVATELY OWNED RIGHTS, INCLUDING ANY PARTY'S INTELLECTUAL PROPERTY, OR (III) THAT THIS DOCUMENT IS SUITABLE TO ANY PARTICULAR USER'S CIRCUMSTANCE; OR

(B) ASSUMES RESPONSIBILITY FOR ANY DAMAGES OR OTHER LIABILITY WHATSOEVER (INCLUDING ANY CONSEQUENTIAL DAMAGES, EVEN IF EPRI OR ANY EPRI REPRESENTATIVE HAS BEEN ADVISED OF THE POSSIBILITY OF SUCH DAMAGES) RESULTING FROM YOUR SELECTION OR USE OF THIS DOCUMENT OR ANY INFORMATION, APPARATUS, METHOD, PROCESS, OR SIMILAR ITEM DISCLOSED IN THIS DOCUMENT.

ORGANIZATION(S) THAT PREPARED THIS DOCUMENT

URS Corporation

ORDERING INFORMATION

Requests for copies of this report should be directed to EPRI Customer Fulfillment, 1355 Willow Way, Suite 278, Concord, CA 94520, (800) 313-3774, press 2.

Electric Power Research Institute and EPRI are registered service marks of the Electric Power Research Institute, Inc. EPRI. ELECTRIFY THE WORLD is a service mark of the Electric Power Research Institute, Inc.

Copyright © 2001 Electric Power Research Institute, Inc. All rights reserved.

CITATIONS

This report was prepared by

URS Corporation
9400 Amberglen Boulevard
Austin, Texas 78729

Principal Investigator
G. Blythe

This report describes research sponsored by EPRI.

The report is a corporate document that should be cited in the literature in the following manner:

Flue Gas Desulfurization Equipment Issues Guidelines, EPRI, Palo Alto, CA: 2001. 1004025.

REPORT SUMMARY

As electric utilities enter a more competitive environment, every aspect of electric power generation is under scrutiny to determine where costs can be reduced. Because flue gas desulfurization (FGD) systems represent significant capital, operating, and maintenance expenses for many coal-fired power plants, identification and implementation of cost reduction options are crucial. This report documents successful approaches for determining the cost-effectiveness of key FGD optimization strategies.

Background

In 1998, EPRI developed the FGD Optimization Workbook (report TR-111118) to help utilities benchmark their system costs and identify potential cost-saving measures. However, of the 20 cost-saving approaches presented and discussed in the workbook, most address FGD process improvements such as using performance additives to lower costs, and relatively few address O&M cost reduction measures for individual equipment items such as pump impeller upgrades. As part of this project, EPRI sponsored a maintenance cost survey that identified high maintenance cost items for many FGD systems. The survey suggested that lessons learned from earlier FGD system experience have benefited the design and equipment specification for new systems installed in response to Phase I, Title IV of the 1990 Clean Air Act Amendments. The current phase of this project addressed equipment-specific maintenance issues.

Objective

To help utilities with coal-fired plants equipped with wet or spray dryer FGD systems lower maintenance costs by applying innovative solutions to high-maintenance equipment.

Approach

The project team followed up the maintenance cost survey conducted in 1997-98 with visits to nine utility stations, all employing wet FGD systems. These stations included 14 FGD systems, installed to treat flue gas from 20 individual units. The wet FGD systems visited represented a range of system ages, boiler fuel sulfur content, and FGD reagent types. In addition, the team conducted a number of telephone interviews with FGD engineers or supervisors, acquiring information on an additional eight FGD systems. The telephone interviews primarily focused on FGD reagent preparation equipment and on plants that have spray dryer FGD systems with rotary atomizers. Finally, they interviewed a number of FGD equipment vendors regarding efforts to lower maintenance requirements for several in-service equipment items. Equipment items covered in this report include wet FGD recycle slurry pumps, recycle slurry valves and piping, FGD inlet and outlet ductwork and dampers, reagent preparation equipment, reaction tank agitators for wet FGD systems, and rotary atomizers used in spray dryer FGD systems.

Results

The site visits and interviews documented equipment-specific issues as well as success stories in the design and maintenance of wet FGD systems. Key findings include the following

- Rubber-lined slurry pumps are the most frequently cited problem in wet FGD systems. Substitution of hard metal alloy materials for the impeller and some or all of the casing liner has dramatically increased pump life.
- While replacement with new valve designs has resolved many problems, some maintenance issues still arise in connection with pump isolation valves and reagent feed control valves. Most piping wear problems occur in the limestone ball mill recirculation loop due to oversized grit.
- Utilities have eliminated major problems with ductwork due to the extensive retrofit of nickel alloy wallpaper in these areas. A few FGD system operators are continuing to upgrade materials used in the wet/dry interface area due to pitting problems.
- Damper problems have become less frequent as absorber reliability increases and the need to isolate a module for on-line maintenance decreases. In fact, the single absorber module system has eliminated the need for isolation dampers.
- Increased availability of FGD systems and the need to maximize SO_2 removal have resulted in additional maintenance of limestone ball mills.
- Rotary atomizers represent the top maintenance labor and materials item in spray dryer FGD systems.

EPRI Perspective

Manufacturers continue to improve the design and materials used in FGD system components. Despite improvements, however, ongoing equipment problems have led FGD system operators to seek innovative methods for optimizing system performance. This report presents strategies for determining the cost-effectiveness of such methods. Furthermore, while some problems have been eliminated or greatly reduced through improved system design and reliability, increased demands have created new challenges in many instances. Clearly, the most important factor in optimizing FGD system availability is the incorporation of FGD systems into overall power plant maintenance management systems.

Keywords

Flue gas desulfurization
FGD equipment

ABSTRACT

Because flue gas desulfurization (FGD) systems represent a significant operating and maintenance expense for coal-fired power plants so equipped, identification and implementation of cost reduction options are important. The objective of this report is to help utilities with coal-fired plants equipped with wet FGD systems and spray dryer FGD systems lower maintenance costs by applying state-of-the art solutions to high-maintenance equipment. This objective is being facilitated by information transfer about equipment designs and/or changes that have been made by some utilities to lower maintenance costs in key areas of the FGD system. The report describes the results of a survey and of a number of plant visits and telephone interviews that were made to document "success stories" in the design and maintenance of wet FGD systems.

Equipment items covered in this report include wet FGD recycle slurry pumps, slurry piping and valves, FGD inlet and outlet ductwork and dampers, reagent preparation equipment, reaction tank agitators for wet FGD systems, and rotary atomizers used in spray dryer FGD systems.

ACKNOWLEDGMENTS

The authors and EPRI would like to thank the utilities that hosted the FGD site visits conducted as part of this project, and those that participated in telephone interviews. Those utilities provided us with access to key maintenance and engineering staff who shared the information collected for this report.

We would also like to thank the larger number of utilities that participated in FGD cost and maintenance surveys conducted as part of an earlier phase of this project. The information collected during those surveys provided the rationale for conducting the current phase of this project.

Finally, we would like to thank the U.S. Department of Energy's National Energy Technology Laboratory in Pittsburgh, who allowed us to reuse artwork in several figures included in Sections 3 through 8 of this report. This artwork was originally developed for their *Electric Utility Engineer's FGD Manual*, which was prepared under grant number DE-FG22-94PC94256 and published in May 1996.

CONTENTS

1 **INTRODUCTION 1-1**

Background 1-1

Report Organization 1-3

References 1-4

2 **MAINTENANCE SURVEY RESULTS 2-1**

Maintenance Item Rankings 2-1

Telephone Survey Results 2-3

Rubber-lined Slurry Pumps 2-3

Piping and Valves 2-3

Flue Gas Ductwork 2-4

Flue Gas Damper Drives and Seals 2-4

Limestone Ball Mills 2-4

Lime Slakers 2-5

Agitators 2-5

Mist Eliminators (MEs) 2-5

Air Sparger Piping 2-5

FGD Equipment Successes 2-6

Slurry Pumps 2-6

Materials of Construction 2-6

Hydrocyclones 2-6

Vacuum Filters 2-7

FGD System Maintenance Staffing 2-7

“Advanced” FGD Maintenance Practices 2-8

3 **RECYCLE PUMP MAINTENANCE ISSUES 3-1**

Pump Liner and Impeller Wear 3-1

Pump Shaft Seals 3-4

Packing Gland Seals 3-4
Mechanical Seals 3-6
Summary 3-7

4 SLURRY PIPING AND VALVE MAINTENANCE ISSUES 4-1
Slurry Piping 4-1
External (to the Absorber) Slurry Piping 4-1
Rubber-lined Piping 4-2
FRP Piping 4-3
HDPE Piping 4-3
Alloy Piping 4-4
Basalt-lined Piping 4-4
Internal (Spray Nozzle Header) Slurry Piping 4-4
Slurry Valves 4-5
Recycle Slurry Isolation Valves 4-5
Reagent Slurry Feed Control Valves 4-8
Fujikin Ceramic Ball Valve 4-9
Clarkson Series C Muscle Valve 4-9
Standard Pinch Valve 4-9
Knife Gate in Cycling Operation 4-11
Summary 4-11
References 4-12

5 DUCTWORK AND DAMPER MAINTENANCE ISSUES 5-1
Ductwork Maintenance Issues 5-1
FGD Inlet Ductwork 5-1
Outlet Ductwork 5-2
Flue Gas Damper Maintenance Issues 5-3
Louver-style Dampers 5-3
Butterfly Dampers 5-6
Guillotine Dampers 5-6
Seal Air Fans 5-8
Summary 5-8

6 REAGENT PREPARATION EQUIPMENT MAINTENANCE ISSUES 6-1
Limestone Grinding Systems 6-1
Background 6-3
Limestone Feed Chute 6-4
Bull Gear and Pinion Gear 6-5
Mill Shell Plates and Lifter Bars 6-5
Lime Slakers 6-7
Background 6-10
Lime Slaker Maintenance Issues 6-10
Summary 6-13

7 REACTION TANK AGITATOR MAINTENANCE ISSUES 7-1
Background 7-1
Agitator Shafts 7-4
Impellers 7-4
Shaft Seals 7-5
Summary 7-5
Reference 7-6

8 ROTARY ATOMIZER MAINTENANCE ISSUES 8-1
Introduction 8-1
Background 8-1
Rotary Atomizer Maintenance Issues 8-3
Atomizer Wheels 8-3
Atomizer Gearbox 8-4
Other Rotary Atomizer Maintenance Issues 8-4
Summary 8-4

LIST OF FIGURES

Figure 3-1 Horizontal Centrifugal Slurry Pump 3-2
Figure 3-2 Stuffing Box with Standard Gland Seal 3-5
Figure 3-3 Tapered Stuffing Box with RIS Mechanical Seal 3-7
Figure 4-1 Cross-section of a Packingless Knife Gate Valve 4-6
Figure 4-2 Knife Gate Valve 4-8
Figure 4-3 Clarkson Series C 4-10
Figure 5-1 Typical Guillotine Damper 5-4
Figure 5-2 Typical Two-Stage Louver Damper 5-5
Figure 5-3 Typical Guillotine Damper Seal Design 5-7
Figure 6-1 Horizontal Mill Grinding System 6-2
Figure 6-2 Typical Shell Plate Liner and Lifter Bar Arrangement 6-6
Figure 6-3 Cross-section View of a Poly-Met Lifter Bar 6-8
Figure 6-4 Cross-section View of a Double-Wave Shell Plate Liner 6-9
Figure 6-5 Simplified Flow Diagram for a Vertical Stirred Mill Lime Slaker 6-12
Figure 7-1 Top-entry Agitators 7-2
Figure 7-2 Side-entry Agitators 7-3
Figure 8-1 Rotary Atomizer Drive and Wheel Assembly 8-8

LIST OF TABLES

Table 1-1 Summary of FGD Systems Visited 1-3
Table 2-1 Summary of Top Five Maintenance Labor Items in Wet FGD Cost Survey..... 2-2
Table 2-2 Summary of Top Five Maintenance Material Items in Wet FGD Cost Survey 2-2

1
INTRODUCTION

The objective of this report is to help utilities with coal-fired plants equipped with wet flue gas desulfurization (FGD) systems and spray dryer FGD systems lower maintenance costs, by applying state of the art solutions to high-maintenance equipment. This objective is being facilitated by information transfer about equipment designs and/or changes that have been made by some utilities to lower maintenance costs in key areas of the FGD system. The report describes the results of a survey, and of a number of plant visits and telephone interviews that were made to document "success stories" in the design and maintenance of FGD systems. Equipment items covered in this report include wet FGD recycle slurry pumps, recycle slurry valves and piping, FGD ductwork and dampers, reagent preparation equipment, reaction tank agitators for wet FGD systems, and rotary atomizers used in spray dryer FGD systems. Much of the information included in this report was previously included in two interim reports published during the year 2000 [1,2].

Note that throughout this report, some equipment items used in FGD applications are identified by their manufacturers' names and model numbers. This information is included only to document the experiences reported by utilities in the plant visits and telephone interviews conducted as part of this project, and is not intended as an endorsement of any manufacturer or their equipment by either the authors or EPRI.

Background

As electric utilities enter a more competitive environment, every aspect of electric power generation is being scrutinized to determine where costs can be reduced. FGD systems represent a significant capital, operating, and maintenance expense for coal-fired power plants so equipped, and thus fall under such scrutiny.

During a previous phase of the current EPRI project (RP 1031-34), the *FGD Optimization Workbook* [3] was prepared to allow a utility engineer, FGD supervisor, or others to:

- Benchmark costs for their FGD system against costs reported by others with similar FGD system types;
- Determine which FGD operating and maintenance (O&M) cost categories represent the best potential for cost savings, and quantify that potential;
- Identify cost saving strategies that would be applicable to their FGD system, and calculate an approximate cost effectiveness for that strategy as applied to their system;
- Develop and implement a plan to develop system-specific data to better determine the cost effectiveness of several cost reduction strategies; and

- Identify EPRI publications and products, and other publications available to provide more information about the cost reduction strategies that hold the most promise.

The FGD Optimization Workbook is a useful tool for helping utility personnel responsible for FGD systems benchmark their system costs and identify potential cost saving measures. However, of the 20 cost saving approaches presented and discussed in the workbook, most address FGD process improvements (e.g., using performance additives) that can lower costs, and relatively few address O&M cost reduction measures for individual equipment items (e.g., pump impeller upgrades).

A maintenance cost survey was conducted as part of this project in late 1997 through early 1998. That survey identified some equipment, such as slurry recycle pumps, that remain high maintenance cost items for many FGD systems. The survey also suggested that lessons learned from earlier FGD system experience have benefited the design and equipment specification for new systems installed in response to Phase I of Title IV of the 1990 Clean Air Act Amendments.

The current phase of the project has addressed equipment-specific maintenance issues. Plant visits and telephone interviews were conducted to document equipment problems experienced by some systems and success stories at others. Documentation of these cases provides specific information to utilities with high maintenance costs on what others have done to lower O&M costs on these equipment items.

This report provides a summary of information that has been collected for six common high-maintenance areas in FGD systems:

- Wet FGD recycle slurry pumps;
- Recycle slurry valves and piping;
- FGD ductwork and dampers;
- Reagent preparation equipment;
- Reaction tank agitators for wet FGD systems; and
- Rotary atomizers used in spray dryer FGD systems.

Nine utility stations were visited, all with wet FGD systems. These stations include 14 FGD systems, installed to treat flue gas from 20 individual units. The stations selected for these visits were primarily those that participated in the cost survey conducted in late 1997 through early 1998. It was felt that the stations that previously participated in the earlier survey would be most likely to share information about maintenance issues. The wet FGD systems visited represent a range of FGD system ages, boiler fuel sulfur content, and FGD reagent types. However, these 14 systems may not capture all issues and fixes for the entire population of utility FGD systems in the U.S., in part because some utilities were not willing to participate in such information-sharing visits.

Table 1-1 summarizes some features of the 14 FGD systems visited. Of the 14 systems, two date to the 1970s, six from the 1980s, and six from the 1990s. Two use magnesium-enhanced lime reagent, and the rest use ground limestone. Nine are on units that fire a high-sulfur coal (>4.5 lb

SO_2 per million Btu heat input), three on units that fire low-sulfur coal (<2.25 lb SO_2 per million Btu heat input), and two on units that fire a coal with a medium sulfur content.

Table 1-1
Summary of FGD Systems Visited

Boiler Coal Sulfur Content	FGD Reagent	FGD Oxidation Mode	FGD System Vintage (Decade)
High	Mg-Lime	Natural	1970s
High	Mg-Lime	Natural	1980s
High	Limestone	Inhibited	1970s
High	Limestone	Inhibited	1980s
High	Limestone	Forced	1980s
High	Limestone	Forced	1990s
High	Limestone	Forced	1990s
High	Limestone	Forced	1990s
High	Limestone	Forced	1990s
Medium	Limestone	Inhibited	1980s
Medium	Limestone	Forced	1990s
Low	Limestone	Natural	1980s
Low	Limestone	Natural	1990s
Low	Limestone	Forced	1980s

In addition, a number of telephone interviews of FGD engineers or supervisors were conducted providing information from an additional eight FGD systems. The telephone interviews were primarily focused on FGD reagent preparation equipment, and on plants that have spray dryer FGD systems that employ rotary atomizers. Finally, a number of vendors of FGD equipment were interviewed regarding efforts to lower maintenance requirements for their equipment items when applied in FGD service.

Report Organization

Section 2 of this report provides a summary of the maintenance survey information collected in 1997/1998, while the remainder of the report covers information collected in the recent plant visits and telephone interviews. Section 3 covers recycle slurry pumps, Section 4 slurry piping and valves, and Section 5 covers flue gas ductwork and dampers. Section 6 covers reagent preparation equipment, Section 7 wet FGD reaction tank agitators, and Section 8 covers rotary atomizers used in spray dryer FGD systems.

References

1. FGD Equipment Issues Guidelines: Ductwork and Dampers, Pumps, Piping and Valves: Interim Report, June 2000, EPRI, Palo Alto, CA: 2000. 1000177.

2. FGD Equipment Issues Guidelines: Reagent Preparation Equipment, Agitators, and Spray Drying Atomizers: Second Interim Report, December 2000, EPRI, Palo Alto, CA: 2000. 1000573.

3. FGD Optimization Workbook, EPRI, Palo Alto, CA: 1998. TR-111118.

2
MAINTENANCE SURVEY RESULTS

Maintenance Item Rankings

The project-specific FGD O&M cost survey conducted in 1997/1998, as part of the preparation of the *FGD Optimization Workbook*, also asked the respondents what parts of their FGD systems required the most maintenance labor and maintenance materials. Although 80 survey requests were sent out, only 35 surveys were returned. Of those, not all were complete. The relatively low number of responses limited the ability to summarize and present information by system type.

Table 2-1 summarizes the top-five maintenance labor items for wet FGD systems among the responses received. It had been desired to categorize responses by reagent type, oxidation mode, and sulfur level. However, because of the limited number of total responses, there were not enough responses in each combination of reagent, oxidation mode and sulfur level to provide meaningful rankings. Instead, rankings are grouped for high-sulfur, wet limestone, forced oxidation systems, for all of the remaining high-sulfur systems (low oxidation, lime or limestone reagent), for all medium-sulfur systems, and for all low-sulfur systems.

The ranking was derived by listing the top-five items from each respondent in each FGD system grouping, then assigning 5 points for a number-one ranking, 4 points for a number-two ranking, etc. The FGD item that had the most points within a given FGD system type grouping was thus the number-one maintenance labor item, that with the second highest total was number two, etc.

Among the wet FGD systems for which this information was provided (26 systems), pumps were the number-one maintenance labor item, independent of sulfur level, reagent, or oxidation mode. Details of the pump maintenance issues are presented below.

Ductwork/dampers was the number-two item, and was reported as a top-five item across all system types. Piping and valve maintenance was reported as a top-five item for three of the four FGD system type groupings. All of the rest of the entries in the table (absorbers, agitators, ball mills, etc.) were less pervasive, only being reported in the top five for one or two FGD system groupings. Because of the relatively few total responses, one of these lower rankings may have resulted from a problem on a single FGD system.

Table 2-2 provides the same information for maintenance materials expenditures. Pumps and ductwork/dampers remain the two most commonly cited maintenance materials items across all FGD system types, but ball mills are also in the top five for all FGD types. As was the case for maintenance labor, piping and valves are cited as a top-five item for three of the four groupings of FGD system type.

Table 2-1
Summary of Top Five Maintenance Labor Items in Wet FGD Cost Survey

	High Sulfur, Wet Limestone/ Forced Oxidation	High Sulfur, Wet Lime or Limestone, Inhibited or Natural Oxidation	Medium Sulfur, Wet Lime or Limestone, All Oxidation Modes	Low Sulfur, Wet Lime or Limestone, All Oxidation Modes
Pumps	1	1	1	1
Ductwork/Dampers	2	2	3	4
Piping/Valves		5	2	2
Absorbers	3			
Agitators			4	5
Ball Mills	4	3		
Fans		4		
Mist Eliminators			5	
Reaction Tanks	5			
Reheaters				3

Table 2-2
Summary of Top Five Maintenance Material Items in Wet FGD Cost Survey

	High Sulfur, Wet Limestone/ Forced Oxidation	High Sulfur, Wet Lime or Limestone/ Inhibited or Natural Oxidation	Medium Sulfur, Wet Lime or Limestone, All Oxidation Modes	Low Sulfur, Wet Lime or Limestone, All Oxidation Modes
Pumps	1	1	1	1
Ductwork/Dampers	2	2	3	4
Piping/Valves		5	2	2
Absorbers	3			
Agitators				5
Ball Mills	4	3	5	3
Fans		4		
Mist Eliminators			4	
Reaction Tanks	5			

Telephone Survey Results

A telephone survey was conducted as a follow up to these tabulated responses. A total of 30 electric utilities representing 55 individual FGD systems were contacted. Of this number, more detailed maintenance data were obtained from 24 utilities and 42 FGD systems.

An observation during the survey was that utility personnel vary significantly in assessing whether or not the level of maintenance required by FGD components is "acceptable." Since FGD systems handle abrasive and/or corrosive slurries and flue gases, some level of maintenance and periodic equipment replacement is considered to be normal. The utility's acceptance of the required level of maintenance depended primarily on whether that maintenance affects the reliability of the FGD system and generating unit. Several utilities were resigned to a one-year component service life because the replacement could be performed during annual outages or on line using spare equipment. For example, "pumps" was the most commonly occurring equipment category in the top-five lists and, as will be discussed later, impellers and casing liners are the most frequently cited components requiring maintenance. Some utilities are resigned to completely rebuilding the pumps annually while others experience five or more years component life in similar service.

A second observation is that utilities continue to conduct extensive trials of new equipment and approaches. A frequent comment was "we used to have a problem with that, but since we ——, the problem has been resolved." This type of response was given for pump internals, agitator impellers, tank linings, isolation valves, and shaft seals.

In general, the utilities cited the following as continuing problems.

Rubber-lined Slurry Pumps

Rubber-lined slurry pumps were the most frequently cited problem. All of the utilities that completely rebuild their absorber recycle pumps annually were using natural-rubber-lined impellers and liners. Utilities that experience much longer pump life either had substituted hard-metal alloy materials for the impeller and, in some cases, all or portions of the casing liner, or had specified hard-metal alloy as original equipment. In most instances, this resulted in extending the pump's internal component life to four years or longer. A few utilities had extended lining and impeller life by substituting urethane for natural rubber. The urethane linings/impellers reportedly did not have the life of the metal alloy pumps but are less expensive than new alloy components.

Piping and Valves

Some FGD systems are still having problems with pump isolation valves and reagent feed control valves; however, most utilities reported that these problems had been resolved by replacement of the original equipment with valves of newer design. Likewise, most problems with slurry piping (both FRP and rubber-lined pipe) were attributed to a specific physical arrangement or condition rather than inadequate material performance. The most commonly cited piping wear problems were in the limestone ball mill recirculation loop, where abrasion by

over-sized grit contributes to accelerated wear, and in recycle slurry pump suction and discharge pipe diameter transition pieces and piping bends or tees.

Flue Gas Ductwork

A survey taken 10 or 15 years ago would likely have reported extensive problems with corrosion of the wet/dry interface of the inlet ductwork and all of the outlet ductwork. For the most part, the extensive retrofit of nickel-alloy wallpaper in these areas has greatly reduced the incidence of these problems. A few utilities are continuing to upgrade the materials used in the wet/dry interface area due to pitting problems. Alloys C-22®, C-276, C-2000®[1], and 59 were reportedly being used.

Flue Gas Damper Drives and Seals

Several utilities reported problems with guillotine damper drives: stretched chains, inadequate drive motors, etc. Most felt this was a mechanical problem with their particular installation rather than a major equipment deficiency.

Flue gas dampers use thin-gauge high-alloy seal strips. These are prone to physical damage and corrosion failure. The reported failure causes included initial use of inadequately corrosion-resistant alloys, poor (i.e., easily damaged) original seal design, or physical damage due to solids buildup on blades. Almost all utilities are now using alloy C-276 (or a similar very corrosion-resistant alloy) for their seal strips. Many have redesigned the seal to reduce physical damage and simplify replacement.

It appears that damper problems are of less concern to utilities as the reliability of the absorbers increase and the need to isolate a module for on-line maintenance decreases. Also, new FGD systems on up to 900 MW generating capacity can use a single absorber module and may not even use isolation dampers.

Limestone Ball Mills

Several utilities felt that the reason ball mills appear in a list of the top-five FGD system maintenance cost items is simply due to the nature of the equipment. Balls wear and must be continually replaced. The mill liner and ball lifters must also be inspected regularly and replaced periodically. The frequency and cost were not considered to be unreasonable at most of the facilities contacted (i.e., it is a significant annual cost but not a “maintenance problem” for most). Another cited reason for higher maintenance costs was that the improved availability of the FGD system and the need to maximize SO_2 removal had increased annual reagent throughput, resulting in increased reagent preparation maintenance costs.

[1] C-22® and C-2000® are registered trademark of Haynes International, Inc.

Lime Slakers

Some of the lime-based FGD systems continue to operate lime slaking equipment that would no longer be applied to new systems. Specifically, detention and paste slakers have problems with incomplete slaking and grit handling that are not experienced by horizontal or vertical ball mill slakers. Much of the erosion and plugging of reagent piping was related to these two problems.

Agitators

Agitators, especially side-entry agitators, appear to have been subject to "teething" problems. Several utilities reported startup problems with materials of construction and impeller mechanical problems. Almost all reported that maintenance problems involved the wetted end of the agitators. Some rubber-lined impellers have been replaced with alloy materials, some alloy impellers have been replaced with more corrosion resistant alloys, and even some corrosion-resistant alloys have experienced erosion problems.

All of the equipment items mentioned above are discussed in greater detail in Sections 3 through 8 of this report. In addition, two other maintenance issues were discussed in the interviews as described below.

Mist Eliminators (MEs)

Like ductwork, problems with MEs are greatly diminished from historical levels. This appears to be due to the use of better quality wash water, improved ME materials, and improved reagent utilization. The utilities who reported high ME maintenance costs are those with “teepee” style MEs that were supplied with one vendor’s design. For the most part, those have or will be replaced with more typical vertical gas flow MEs that have a fixed-grid wash system.

Air Sparger Piping

It is not intuitive that the oxidation air sparger piping used in forced-oxidation processes would be a major maintenance problem, as the sparger piping is always submersed in the reaction tank slurry and isolated from flue gas temperature excursions and high-velocity abrasive slurries. Several problems were identified with spargers, however. In some applications, the sparger orifices have eroded due to high air velocities. Second, anytime the air flow is disrupted, the slurry partially plugs the distribution header. In some systems, the openings in the header plug even with no air flow disruptions. It is not clear whether this plugging is due to merely to solids deposition, or due to gypsum scaling. The latter is possible because, even though the oxidation air is partially quenched in the header downstream of the compressors, the air is not completely saturated at the slurry operating temperature and some evaporation occurs as the air contacts the slurry. Finally, some systems have had problems with sparger piping coming loose and/or fatiguing due to the motion of the slurry, leading to sparger failures.

FGD Equipment Successes

As the follow-up survey was conducted, some FGD system equipment success stories became obvious, some by being mentioned as successful modifications or replacements and others by the fact that no one mentioned them as a problem.

Slurry Pumps

As discussed previously, hard-metal alloy slurry pump impellers and liners are providing extremely good service. Compared with rubber-lined casings and impellers, the metal versions are providing over four times the life. Less expensive urethane linings and impellers are in some cases providing double the life of rubber-lined equipment or better.

Utilities using mechanical shaft seals on slurry pumps are mostly very satisfied with their operation, although some had initial problems selecting the right design and face materials. Although mechanical shaft seals have a very high initial cost ($10,000 to $15,000 per pump), they are giving extremely good service with service lives in excess of five years. Some utilities would like to convert from a packed gland seal but can not justify the capital cost of the seal and required modification to the pump's gland arrangement. However, whenever new pumps are required, they are most commonly purchased with mechanical seals.

Few problems were reported with absorber recycle pump gear drives, bearings, or motors. This is probably attributable to the initial quality of the equipment and the fact that almost all of the utilities have initiated lube oil analyses for this equipment (as discussed below). Some slurry pump belt drive problems were reported, but none were reported as a serious maintenance concern.

Materials of Construction

The selection of appropriate but cost-effective materials of construction for the corrosive, erosive operating conditions in FGD systems has historically been a difficult task. However, only eight of the units in the survey listed tank or absorber linings in their top-five maintenance cost items. Several of the systems reported high ductwork maintenance costs, but indicated that the retrofit of corrosion-resistant alloy wallpaper was substantially reducing this problem. It appears that the industry has settled on a set of solutions: nickel-alloy plate or wallpaper for the inlet and outlet ducts and a wide range of materials for the absorber, depending on slurry chloride level and utility preference. It appears that if good construction quality assurance/quality control (QA/QC) is followed, stainless steel, nickel-alloy wallpaper or solid plate, organic lining, or rubber lining each can be used successfully. However, one utility reported that nickel-alloy wallpaper in the absorber resulted in leaks that are very difficult to locate, and would not recommend wallpaper on absorber walls.

Hydrocyclones

Not one of the units using hydrocyclones for primary dewatering mentioned maintenance to this equipment in their top-five list, while five other units cited problems with thickeners. This

comparison with thickeners is not quite fair, since hydrocyclones were used only in limestone/forced-oxidation FGD processes, which produce an easy to dewater byproduct, while thickeners were applied to all types of wet FGD processes. Nevertheless, where applied, hydrocyclones are performing well.

Vacuum Filters

Generally, both rotary drum and horizontal vacuum filters are performing well. Cloth blinding and cloth life were the two most frequently cited problems. However, one utility that uses an indexing horizontal vacuum filter feels this equipment has never performed adequately due to mechanical problems.

FGD System Maintenance Staffing

The utilities were asked to categorize the FGD maintenance staffing approach used at their station. In order of decreasing frequency, the staffing approaches cited were:

- Plant-wide station maintenance staff assigned by work order to FGD equipment (11)[2];
- Dedicated FGD maintenance staff (9);
- Plant-wide station maintenance staff rotating through a dedicated FGD staff assignment (6);
- FGD operator/maintenance team (2); and
- Outside maintenance contractor (1).

Where a common maintenance staff for the entire station is provide, the FGD system was considered to be no different from any other plant system. At these stations it was considered important that all of the maintenance staff be familiar with all of the plant equipment.

The use of a dedicated FGD maintenance staff was second most frequently cited; however, perhaps reflecting the reductions in FGD system maintenance problems, this staff was commonly combined with the rest of the "outside" station maintenance staff. The outside maintenance staff also has responsibility for the coal yard, particulate control equipment, ash handling, and cooling towers. In some cases, this was a relatively small staff and commonly supplemented by the plant-wide maintenance staff as required.

The use of a rotating maintenance staff was another method utilities used as a method of maintaining continuity yet ensuring the maintenance staff is familiar with all plant systems. Rotation durations of up to three years are being used. Two utilities had eliminated the distinction between FGD system operations and maintenance in a teaming arrangement. This team performs most of the daily maintenance but can be supplemented by the plant-wide maintenance staff.

[2] The total sums to more than the number surveyed because some stations use a combination of staffing concepts.

"Advanced" FGD Maintenance Practices

Every unit surveyed had a computerized maintenance management system (CMMS) in place, although three of them had only partial FGD system equipment coverage (e.g., major equipment only). All but eight of the utilities were using the CMMS to generate preventive maintenance work orders for all FGD equipment, and the remainder had at least the major equipment covered. In several instances, the use of preventive maintenance was cited as a major factor in the overall improvement in FGD system availability.

The use of the predictive maintenance techniques—especially vibration monitoring and lube oil analysis—was also widespread. Depending on the utility, vibration monitoring was conducted continuously by in-place equipment or intermittently by predictive maintenance teams. Lube oil analyses were used on absorber recirculation pump gear reducers, ball mill drives and booster fans. Some utilities conduct the analyses in-house; others use outside contractors.

Several utilities reported that the use of predictive maintenance techniques in the FGD system was part of the extension of such programs to many generating plant subsystems. Other predictive techniques being used include motor amp readings, laser alignment checks, and thermal imaging.

Only three utilities have instituted formal Reliability Centered Maintenance (RCM) programs. Three more had informal programs or are in the initial implementation stage. Several of the utility FGD personnel contacted were unfamiliar with the RCM concept and were unsure how it might be of benefit to them. Many felt that the foundation of this concept was already at work in their existing preventative/predictive maintenance programs.

3
RECYCLE PUMP MAINTENANCE ISSUES

The most prevalent configuration for recycle slurry pumps in newer FGD systems (designed and built in the 1990s) is to use rubber-lined pumps supplied by Warman, Georgia Iron Works, or others, with "high-chrome" white iron impellers, mechanical seals and in-line drives with gearboxes to reduce pump speed from the motor speed. In older FGD systems, a number of other pumps have been used, including Denver, Allen-Sherman-Hoff (ASH), Ingersoll-Rand, Worthington, Allis-Chalmers, and others. Belt drives were more prevalent, and packing glands were used for shaft seals. Most pumps in the older systems were originally supplied with all natural rubber casing liners and rubber-lined impellers.

The focus of these visits has been on chronic pump maintenance issues that were identified in the previous surveys that were described in Section 2. Pump maintenance issues addressed include wear and failure of the rubber in the casing liners and on impeller faces, and failure of packing or mechanical seals, which in some cases cause damage to shaft sleeves. Each of these issues is described below, and recent industry experiences in resolving these issues are discussed.

Other slurry pump problems identified appear to be less chronic. On belt drive units, belt replacement and adjustment represent ongoing maintenance requirements, but the labor and materials costs associated with these efforts are usually relatively minor. Some gear-driven pumps have experienced gearbox overheating and failure, but these have generally been isolated in nature and have not appeared to represent a pervasive maintenance problem.

Pump Liner and Impeller Wear

The discussions in this section will use the Warman International, Series A, Type L Slurry Pumps as an illustration. These pumps have been widely used in recent FGD recycle slurry applications. However, the discussions in this section can generally be applied to other lined slurry pumps, such as have been provided by Georgia Iron Works, ASH, Denver, Ingersoll-Rand, and others.

The larger Warman slurry pumps use a four-piece replaceable liner for the pump casing (see Figure 3-1) and a closed-face impeller. The four liner pieces include (starting from the motor side) a frame plate liner insert, a frame plate liner, a cover plate liner, and a throatbush (also commonly referred to as the front liner, or suction liner). In other manufacturers' pump designs, and even in other Warman sizes, the number of liner pieces used and the names of these pieces vary somewhat.

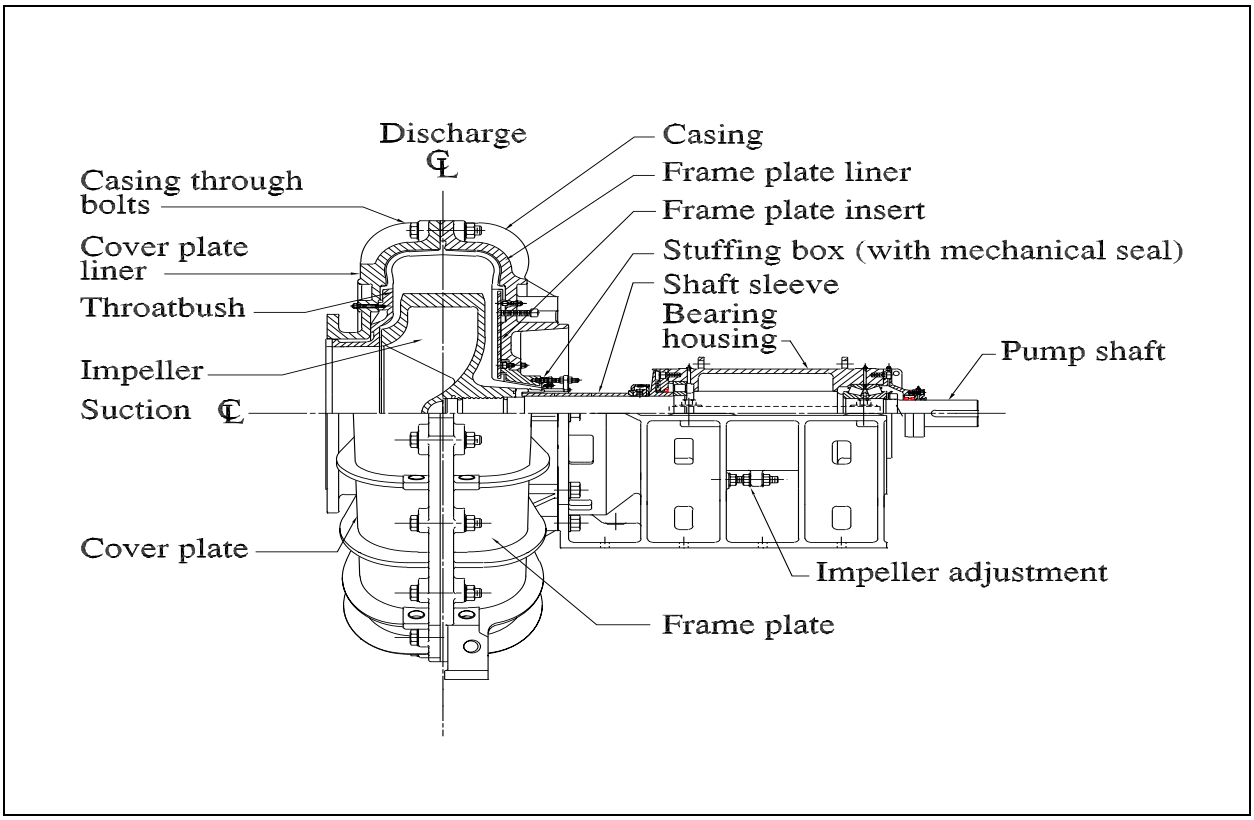

Figure 3-1
Horizontal Centrifugal Slurry Pump

Rubber liners are desirable for FGD applications because they are relatively impervious to high chloride levels (e.g., 50,000 ppm or greater) and are suitable for the normal range of temperature and pH. However, rubber components are susceptible to damage by oversize and/or sharp objects such as scale or nozzle parts entering the pump and making cuts, and to longer-term chemical degradation and erosion by the slurry.

A review of recent industry experience illustrates some shortcomings of all-rubber casing liners and impellers in recycle slurry service. Rubber impellers tend to lose material near the tips of the impeller with time, due to damage by tramp material, chemical degradation or erosive wear. When large pieces break off, they can collect in slurry nozzles and block slurry flow. One FGD system reports that impeller material loss appears to affect slurry flow patterns in the pump, and accelerates liner wear in isolated areas. If not caught soon enough, liners can wear through, resulting in erosion damage to the cast iron casing halves. The best external indicators of impeller/liner rubber loss are reduced pump discharge pressure and/or motor amperage, or increased pump vibration readings. Reduced scrubber performance may also result due to a resulting lower L/G ratio and reduced nozzle flow and atomization performance.

In the pump liners, throatbush or suction liner insert wear is most common, apparently due to the erosive action of the slurry as it enters the pump housing, and in the close clearance area between the impeller face and the liner. The suction liner insert is also susceptible to damage by tramp material. Some utilities have also experienced high wear on the frame plate liner insert.

The industry has employed a couple of approaches for reducing maintenance costs associated with impeller and liner wear. Warman's standard design for FGD recycle slurry service is to use "high chrome" cast alloys for impellers and for the throatbush or suction liner insert. Their standard high-chrome (nominally 27% chrome) alloy has a minimum hardness of 600/650 Brinell, and Warman recommends its use for up to 20,000 ppm of chloride in the recycle slurry. They offer an ULTRACHROME™[3] alloy (nominally 28% chrome and low carbon) for up to 50,000 ppm of chloride. Phase I plants (those started up in the 1994/1995 timeframe for compliance with Title IV of the 1990 Clean Air Act Amendments) that were originally specified with high chrome impellers and suction liner inserts have generally gotten good service out of these materials. Most of these have seen five plus years of service with all of the original wetted parts. One Phase I plant reported that they are just now (Fall 2001) planning to replace rubber liner parts in their Warman recycle slurry pumps after almost seven years of trouble-free service. Several Phase I plants that originally used rubber lined impellers and/or suction liners are in the process of converting to high chrome in these areas as the rubber-lined parts fail.

Another approach has been to use alternate polymeric materials to replace the natural rubber liners and impellers, either with alternate materials provided by the pump manufacturer or provided by a third party vendor. Townley Manufacturing Company is one third party vendor that provides replacement parts for utility FGD service. Townley and others can provide urethane liners that some utilities have found to provide longer service than natural rubber liners. Townley's urethane product is known as "TOWNIPRENE®[4]." Depending on the manufacturer and model of pump, these can be either bolt-in or bonded liners. Some utilities reported trying neoprene as a replacement for natural rubber, but most reported better success with urethane.

Not all of the utilities using urethane casing and impeller liners have experienced improved performance over natural rubber, though. One utility reported that, on average, urethane-lined impellers were lasting about the same period of time as rubber-lined impellers. Furthermore, they observed that the natural rubber lining tended to wear away gradually, while the urethane tended to fail by having large pieces break away. The latter is undesirable because the larger pieces can plug openings in slurry nozzles. This utility is converting to high chrome impellers, with a mixture of natural rubber and urethane casing liners.

Townley also offers alloy replacement impellers and liners for most pumps used in FGD service. Their standard "high-chrome" alloy is a 28% chromium, but they reportedly can offer other alloys as needed to account for fluoride and chloride levels, and particle abrasiveness at individual FGD systems. Other materials Townley has used include a "Super Chrome" alloy (>30% chromium) and a proprietary "SS400" alloy. Townley reports some alloy pump parts that have seen seven to nine years of service in FGD applications without significant wear. Many utilities have one or more pumps in a trial application of alloy impellers and/or liner pieces, with the intent of converting all of their pumps over time if the trials prove to be effective.

[3] ULTRACHROME™ is a trademark of Warman International Ltd.

[4] TOWNIPRENE® is a registered trademark of Townley Manufacturing Company, Inc.

For some pumps, Townley also offers complete replacement of all of the wetted parts in high chrome or other alloys. Instead of using replaceable liners, these parts replace the original pump casing with solid alloy pieces that bolt up to the original pump pedestals.

Pump Shaft Seals

The typical design in FGD systems installed in the 1970s and 1980s was to seal the pump drive shaft where it enters the casing with a packed gland seal. Most systems installed in the 1990s have used mechanical seals in this area.

Packing Gland Seals

In the packed gland seal type, there is a stuffing box in the annulus between the shaft and the casing that accepts multiple rings of a packing material. A typical stuffing box arrangement is illustrated in Figure 3-2. Often the packing comes on a spool, and is cut to length to match the shaft circumference. After the required number of packing rings has been inserted into the stuffing box, a gland is bolted up to compress the packing against the shaft. Water is fed to a lantern ring restrictor in the stuffing box to lubricate and cool the packing and to prevent slurry from flowing into the gland area when the pump is in service. Adjustment of the packing gland tightness and the seal water pressure and flow rate are used to control seal effectiveness, and also impact seal life. As an example of seal water requirements, on large Warman pumps used in FGD recycle slurry service, with their standard packing gland seal Warman recommends seal water flow rates in the range of 15 to 35 gpm per pump, at a pressure at least 5 psi above the pump discharge pressure.

Many early system designs used thickener overflow or pond return water as seal water. This water almost always contains a small fraction of solids, which tend to exacerbate seal and shaft sleeve wear. Most newer systems use fresh water in this application, and many of the earlier systems have converted to fresh water for use as seal water. However, as the seals wear, the seal water rate can become significant, and high seal water usage can adversely affect the FGD water balance in closed water loop systems.

With time, the packing wears to the point where it no longer is effective, and must be replaced. The mean time between failure (MTBF) for packing varies from system to system, but one reported an MTBF of only 5 weeks. This is an older (1970s vintage) FGD system that uses a reclaim water for seal water. Another system reported that in twelve years of operation, they had repacked their recycle pumps on average only twice. This system uses a fresh water supply for seal water and the seal water flow rate per pump is 15 gpm. They use a teflon-impregnated rope seal.

To repack a pump, it must be taken out of service and tagged out, then it can take anywhere from 4 to 12 hours to replace the packing and adjust the gland, depending on the number of rings required and the difficulty of access to the pump. If the pump is run for very long with failed packing, slurry leakage down the shaft during operation can lead to wear of the shaft sleeve, which must be replaced when the pump if repacked. Replacing the shaft sleeve requires a

significant additional manpower and materials expense beyond that for just replacing the packing.

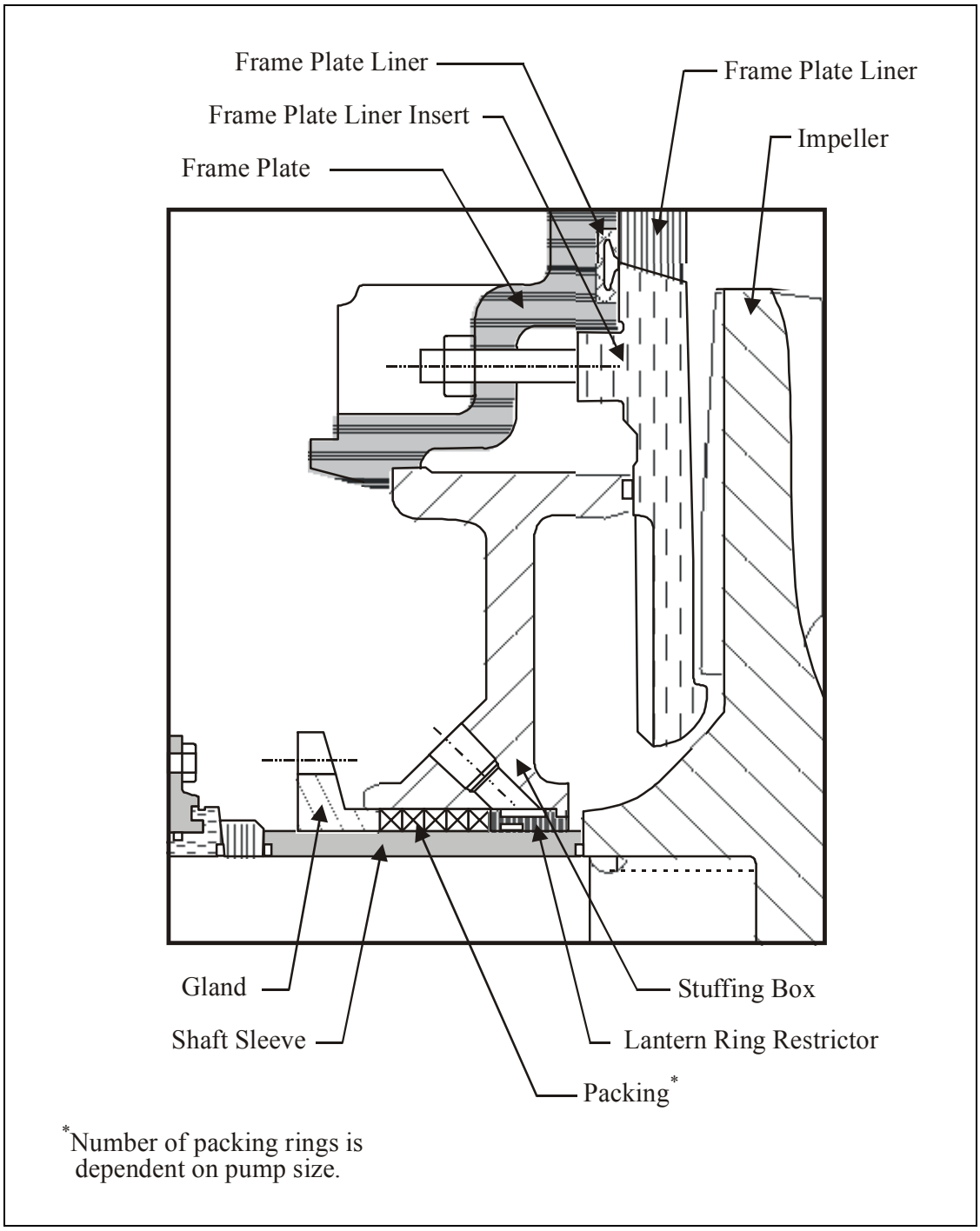

Figure 3-2
Stuffing Box with Standard Gland Seal

(Source: Warman International, Inc., Madison, Wisconsin)

Utilities have, in some cases, spent 20 years trying to optimize packed gland seal arrangements. Many have gone to higher alloys such as CD4-MCu in the stuffing boxes, and wear resistant materials such as Ni-Hard on shaft liners. One utility reportedly switched to RYTON™[5] lantern rings at the wetted end of the stuffing box as a means of eliminating electrochemical corrosion resulting from high chlorides in the recycle slurry. Choice of packing materials tends to be site specific, with each utility determining which materials provide the best compromise between seal life and shaft sleeve wear for their application. Some use cut-to-length packing, and some use pre-formed packing sets specific to their application.

Mechanical Seals

Many FGD systems are using one particular mechanical seal type for recycle pump applications. Nearly every Phase I FGD system installed in the mid-1990s uses the BW/IP International (now Flowserve) RIS mechanical seal in this application, as do a number of earlier systems that have retrofitted mechanical seals. This is a flushless seal (does not require any seal water) that uses a single, flexible rubber-in-shear element rather than springs or bellows to pre-load the seal surfaces. The use of rubber rather than springs or bellows reportedly makes the seal less likely to clog. The seal faces are either tungsten carbide or silicon carbide. The seal is cooled by slurry flow on the back side of the seal. Figure 3-3 illustrates a typical pump stuffing box equipped with an RIS mechanical seal.

Of the six Phase I or newer FGD systems visited as part of the current phase of the project, five used the BW/IP mechanical seals. The sixth used packing gland seals, as the new FGD system was designed to match an existing system on an older unit at that station. These five systems using the BW/IP mechanical seals include upwards of 50 recycle pumps in total, many of which have been in service for more than six years. Of those pumps, only one mechanical seal failure was reported. This one failure was reportedly a result of the pump mechanic inadvertently setting the seal clearances too tight during routine pump maintenance. The remainder of these seals had run virtually untouched over this time period. One site did report that they occasionally experience minor slurry leaks from their seals, which could be eliminated with a water flush of the seal.

In spite of this success on Phase I and newer plants, mechanical seals have seen only limited use in retrofit applications to pumps that originally used packing gland seals. Some utilities that were visited as part of this project cited the high initial cost of the seals (reportedly on the order of $10,000, depending on size, plus the cost of machining or replacing the existing stuffing box) as a limiting factor. Also, some older pumps tend to operate with high relative shaft movement, due to wear on the shaft bearing assemblies, which may be excessive for mechanical seal operation.

Several of these utilities have converted one pump in a trial application of the seal. These utilities may convert more pumps as they are rebuilt, depending on the success of their trial applications. Depending on the utility, they are looking at somewhere between two and five years for the average life of mechanical seals to make conversion cost effective. One utility has a problem with pump discharge valves not always opening on pump startup. They expect that the “dead

[5] RYTON™ is a trademark of the Phillips Chemical Company.

head" situation would blow out a mechanical seal, and do not want to extensively retrofit mechanical seals until they have implemented a solution to this problem.

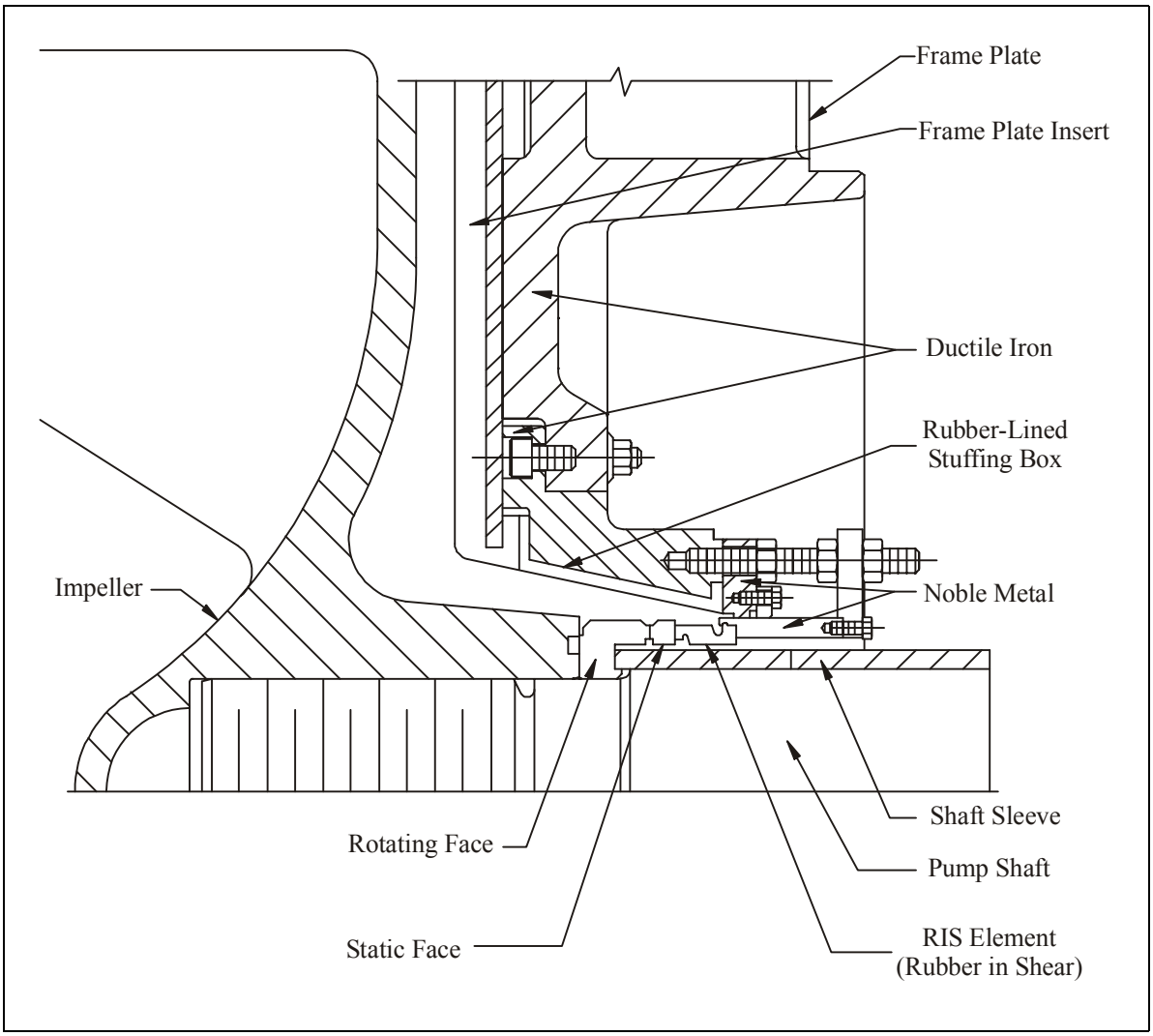

Figure 3-3
Tapered Stuffing Box with RIS Mechanical Seal

However, one utility visited has converted all of their Denver recycle slurry pumps from packing gland seals to BW/IP RIS mechanical seals, and reports few failures in 6 to 8 years of operation. Another utility has converted a belt-driven Denver pump to a mechanical seal configuration, but rather than using the BW/IP RIS seal, they are trying a Burgmann flushless seal. They did not have enough time on this retrofit to comment on the success of this seal design in FGD service.

Summary

A number of utility FGD systems, including most of the Phase I units, are demonstrating that slurry recycle pumps can be high reliability items, by using alloy impellers, alloy casing liners in

key wear areas, and rubber-in-shear mechanical seals. In some instances, utility FGD systems have made lesser improvements in pump reliability where they have found that urethane-lined impellers and urethane casing liners are providing better service than natural rubber pieces, at a lower purchase price than solid alloy pieces.

Older FGD systems (i.e., those that predate the Phase I retrofits) typically have to justify the expense of converting to solid alloy impellers, alloy suction liners, and/or mechanical seals through an anticipated savings in pump maintenance labor and materials dollars. Many utilities are piloting such conversions on one or more pumps in their FGD systems, in an attempt to gather data on actual maintenance savings. In many cases, the utility must determine the life of new, expensive pieces in their FGD environment to be able to justify conversions.

Such pilot conversions are certainly advisable before spending tens or hundreds of thousand dollars to upgrade pumps to the current state of the art. For example, one FGD system visited during this project had to pilot two different impeller alloys before finding an alloy that would provide a long life with their system chemistry.

However, utilities may need to look beyond pump maintenance costs alone in justifying system-wide conversions. For example, conversion from rubber-lined or urethane-lined impellers and/or suction liners to alloy parts can significantly reduce nozzle plugging in absorbers, particularly in systems that use nozzles with relatively small minimum passages. Reduced nozzle plugging can bring other cost benefits such as higher average SO_2 removal performance (considering the dollar value of SO_2 allowances) and reduced maintenance requirements during absorber outages for nozzle and header cleaning.

Similarly, conversion to mechanical seals might be considered in concert with a change in mist eliminator (ME) wash water source to include more fresh water, as fresh water currently used for packing gland seal water can instead be added with the wash. Such a change in the system water balance can result in improved cleanliness of the absorber mist eliminators, particularly if the plant is currently using a gypsum-saturated reclaim water for ME washing. Improved cleanliness in the mist eliminators can bring about other cost benefits, such as reduced time manually cleaning ME elements during absorber outages, reduced absorber pressure drop, the ability to treat more flue gas in each absorber, higher overall system SO_2 removal, etc.

4
SLURRY PIPING AND VALVE MAINTENANCE ISSUES

For the FGD systems that were visited in the current phase of this project, almost every system has a slurry piping problem they are trying to resolve. Even the Phase I designs are not immune to slurry piping problems, and after six years of operation several are dealing with the repair and/or replacement of high-wear piping sections. Valve problems were less widespread in the plants that have been visited.

Slurry Piping

Two maintenance issues were apparent in the site visits that were conducted. One is piping failures from the inside out due to erosion in the vicinity of concentric or eccentric reducers and expansions, elbows, and tees. Another is wear from the outside in on piping internal to absorbers, due to slurry spray impingement from nozzles on the next higher spray header level. The utilities visited have implemented or are implementing a wide range of solutions to these problems. There does not seem to be a universal "best solution" to slurry piping wear, but utilities have a pretty broad range of options to consider in choosing the best solution to their problems.

External (to the Absorber) Slurry Piping

This study has focused on large-diameter (approximately 8-inch to 42-inch-diameter) recycle slurry piping, although some data were collected on smaller-diameter piping (e.g., 2-inch to 6-inch diameter) such as reagent makeup and slurry blowdown. Most of the systems visited as part of this project have used rubber-lined carbon steel piping in recycle slurry applications. A lesser number use fiberglass-reinforced-plastic laminates (FRP, or commonly called fiberglass), one uses high-density polyethylene (HDPE) in some applications, and one converted their rubber-lined pipe to alloy piping.

Slurry piping is typically sized to result in bulk fluid velocities in the range of 5 to 8 ft/s (1.5 to 2.4 m/s) [1]. This produces heterogenous flow, where particles are suspended in the slurry, but the slurry density is higher in the lower quadrant of horizontal pipe runs and along the outer diameter of elbows. Operating slurry piping at significantly higher or lower velocity tends to increase slurry abrasiveness. Increased abrasiveness at lower velocity is generally along the bottom of the pipe, due to particles dropping out of the slurry and bouncing, rolling, or dragging along the bottom.

The choice of piping material can affect either the bulk velocity or required pipe diameter for a given slurry volumetric flow rate, due to differences in pipe wall thickness. For a given pipe outside diameter (O.D.), alloy and FRP pipe tend to have the least wall thickness and greatest effective pipe internal diameter. Rubber lined pipe tends to have less effective diameter due to

the ½-inch to 1-inch thickness of rubber inside the carbon steel pipe. HDPE tends to have an even lesser internal diameter, because of the significant wall thickness needed to achieve the pressure ratings required for FGD recycle slurry service. These differences become less significant as the pipe O.D. increases, though, since wall thickness begins to have a relatively small impact on internal cross-sectional area.

The following provides a discussion of experiences reported during the nine FGD site visits recently completed, for each recycle slurry piping type.

Rubber-lined Piping

Although rubber-lined pipe is often used in large-diameter, recycle slurry piping applications because of a low first cost, every system visited that uses rubber-lined pipe in this application was experiencing some sort of problem. Most common was wear of concentric or eccentric reducers used to transition from larger diameter recycle pump suction or discharge piping down to the diameter of the suction or discharge flange on the pump casing. The turbulence, bulk velocity increases, and the radial velocity component introduced in these transitions apparently leads to higher erosive wear in and around these sections than in straight runs of pipe. Most utilities experiencing wear in these areas have gone to a urethane lining rather than natural rubber, or have replaced these pieces with FRP components. Townley is a common vendor for urethane lining of these pieces, and Beetle, Ershigs, RPS (was ABCo), and Smith Fiberglass have supplied FRP pieces.

One Phase I system with rubber-lined recycle slurry pipe has an ongoing problem with wear of the rubber lining immediately above the transition piece on their recycle pump discharge piping. They previously replaced the rubber-lined transition pieces with urethane-lined components, but now the first few inches of the downstream, long vertical run are eroding away. They have tried various rubber patches, using alternate rubber formulations, with little success. They also tried a 1-inch thick urethane spacer immediately downstream of the transition, to take the brunt of the abrasion, with little success. It would be quite an effort to remove the entire pipe section to have it urethane coated, and with the rubber lining it would be difficult to do a field modification to cut down the length of rubber-lined piping to add a urethane-lined spool piece. They are currently have fabricated alloy “top hat” inserts that they will place over the high wear areas. These inserts duplicate the flange bolt pattern and fit just inside the internal diameter of the rubber lining, covering the first several inches of piping with the alloy. They are just starting a test of these inserts.

One utility with a 1970s vintage FGD system has taken a unique approach to solving their problem with wear in smaller-diameter (8 to 10-inch), rubber-lined piping transitions. They have replaced a number of transitions, “y’s” and piping bends with cast urethane pieces supplied by Creative Urethane. Not only is the urethane transition more abrasion resistant, the flexibility of these pieces allows the piping to flex some relative to the stationary components they are bolted to. However, because the cast urethane pieces are relatively flexible, they cannot be used for longer and large-diameter piping runs.

This same utility has gotten multiple years of life out of most straight run piping and elbows in their large-diameter (e.g., 24-inch), rubber-lined recycle slurry piping. They have considered

retrofitting FRP pipe, but have not found the economics to be attractive. They use a local vendor to reline pipe, and have found it is more cost effective just to reline than to implement a materials change.

One Phase I system has experienced erosive wear in rubber-lined elbows and tees in the slurry manifolds up at the spray header levels, rather than in the transitions near the pumps, starting after four to five years of operation. This utility is systematically replacing all of the rubber-lined manifolds on their absorbers with FRP pieces. Most other sites with rubber-lined pipe have not experienced excessive wear in these areas, so it is not clear why this one system started to experience problems in less than five years.

FRP Piping

FRP piping is made as a multi-layer laminate of resins and fiberglass strands. The inner layers provide corrosion and erosion resistance, the middle layer provides structural support, and the outer layer provides exterior protection. Each manufacturer custom fabricates the laminate formulation for the particular application.

The Phase I systems that have installed FRP for their external, large-diameter recycle slurry piping have not reported any problems. One system built in the 1980s using FRP external piping is now beginning to experience erosion failures of some piping runs. For now, they are repairing individual runs with FRP patches and two-part epoxies. They expect that in the next few years, after 15 or more years of service, they will begin experiencing more frequent failures and may have to implement wholesale replacement of some pipe runs.

Another utility with 12 years of run time on FRP pipe sees some erosion just downstream of the pump discharge, where the change in internal diameter from the rubber-lined pump discharge to the larger, unlined pipe appears to create eddy currents. They use an RPS-brand two-part epoxy material to patch wear spots during routine pump maintenance, and had no failures in this area at the time of our visit. They also retrofitted 8-inch diameter flanged nozzles to the recycle slurry headers just a few feet downstream of each pump, to allow the insertion of bladders to serve as a pump discharge block valve (see the discussion of slurry valves later in Section 4). They report some erosion of the pipe in the vicinity of this penetration as well, which they similarly repair with the epoxy. They reported no other problems with their external (to the absorber) slurry piping. However, they reported that inspection of the piping internals shows some loss of the erosion resistant layer on the inside of the pipe in the vicinity of the elbows near the spray sections of the absorbers, where the pipe changes from vertical to horizontal orientation. Although they have not experienced any problems in these areas, they expect erosion in these areas to become a problem in the next few years.

HDPE Piping

A number of utilities have used HDPE in small-diameter slurry piping (e.g., 4-inch or 6-inch) such as limestone feed, scrubber blowdown, or thickener underflow. Phillips Petroleum's Driscopipe division is a common supplier of HDPE pipe for FGD applications. However, at least one utility is using HDPE for recycle slurry feed and return piping (24-inch and 36-inch

diameter, respectively). This piping has been in service for seven years with no problems. Pipe pressure ratings at slurry temperatures result in an upper limit to the diameter of recycle slurry piping that can be installed in HDPE pipe. This same utility wanted to use HDPE for the recycle slurry piping in a new unit, but HDPE piping is not available with an adequate pressure/temperature rating in 42-inch diameter.

Alloy Piping

One 1980s vintage system had on-going problems with failure of the rubber lining in their large-diameter recycle slurry piping. They replaced this piping with 317 stainless steel alloy, and have reported no pitting or other corrosion problems in this service. Their recycle slurry chloride levels generally range from 2000 to 3000 ppm.

Basalt-lined Piping

This is generally only used in smaller-diameter applications, such as limestone reagent feed and return lines, and mill circuit piping. Two utilities visited were using basalt-lined piping in such service, and reported essential no wear in 5 and 12 years of operation, respectively.

Internal (Spray Nozzle Header) Slurry Piping

The systems visited used alloy piping, FRP piping, or rubber-coated, rubber-lined piping for the spray nozzle header piping internal to the absorbers. The alloys used vary with the vintage of the plant design and the design chloride level. Typical alloys include 317LMN stainless steel, 904L stainless steel, Alloy 625, or C-276. The utilities using alloy header piping did not report any issues associated with the piping itself.

Several utilities mentioned that it was important that the maintenance staff be aware that these same alloys are used for the nozzle mounting nuts and bolts, and that this hardware must be retained when nozzles are removed for cleaning and/or replaced. Some newer systems are using Victaulic couplings to mount nozzles to the headers. An advantage of this mounting system is that only one nut and bolt is required to mount each nozzle, greatly simplifying the need to keep up with hardware when nozzles are removed and replaced.

Despite using abrasion resistant formulations in the outer layer of the FRP laminate, some utilities using FRP headers internal to the absorber reported erosion of the piping exterior where nozzles above the headers impinge recycle slurry. A number of approaches have been applied with success to reduce external piping erosion. One utility applies a trowel-on epoxy reinforced with ceramic beads to repair eroded areas and to provide resistance to further erosion damage. Another system uses rubber linings on the upper half of the pipe exterior, while a third system uses a polyethylene coating. A fourth system has applied an RPS-brand two-part epoxy to the upper surfaces of the pipe. They simply trowel the epoxy onto the headers while in place in the absorbers.

Two utilities that have had FRP spray nozzle headers in service for 12+ years report that they have replaced portions of headers, but have not done any wholesale replacements. Erosion

failures have led to these partial replacements, either by external or internal erosion at the flanges where nozzles are mounted. One utility reports that the end nozzle on each header is most prone to internal erosion failure.

Virtually all of the systems visited used silicon carbide slurry nozzles, and none report significant wear. Some nozzles have been replaced in most systems, though, due to damage sustained during handling or when header flanges or bolts have failed and the nozzle falls. Most systems report instances of nozzle plugging, and some report a subsequent buildup of solids in slurry headers with plugged nozzles. Rubber chunks off of piping, pump liners, and impellers appear to be the most common causes of nozzle plugging. These instances are reduced by upgrades to urethane and/or alloys in high-wear pump and piping applications, and by replacing nozzles with designs that have larger minimum free passage diameters.

Slurry Valves

The previous surveys discussed in Section 2 identified pump isolation valves and reagent feed control valves as ongoing maintenance issues. Therefore the focus of the current phase of the project has been to collect data on successful applications of isolation valves in large-diameter recycle slurry applications, and in limestone reagent makeup applications. Where available, comments on valves for other slurry services are also made.

Recycle Slurry Isolation Valves

In the FGD systems visited, most used Clarkson KGA knife gates for recycle pump isolation service. Those using the Clarkson KGA valves were almost unanimous in their high regard for this valve. The valve functions by having a knife gate inserted between two rubber rings in compression; the bottom edge of the gate is completely retracted from the rings when the valve is open, and completely emerges from the rings at the bottom when the valve is closed. The two rings have essentially the same internal diameter as the pipe on either side of the valve. Because the knife gate is inserted completely through the rings when the valve is closed, no slurry collects in an enclosed seat at the bottom of the valve, so the valves close tightly. Figure 4-1 illustrates the sealing arrangement in the Clarkson KGA “packingless” knife gate valve.

There are some drawbacks to this valve, though, including

- A tendency to leak slurry while the gate is in motion (either being inserted or withdrawn from between the two rings);
- Susceptibility for damage to the rubber if tramp material is caught in the valve when it cycles; and
- A tendency for the rubber to take a temporary set if the valve has been closed a long time, resulting in a slurry leak until the rubber recovers and the two rings seal back together.

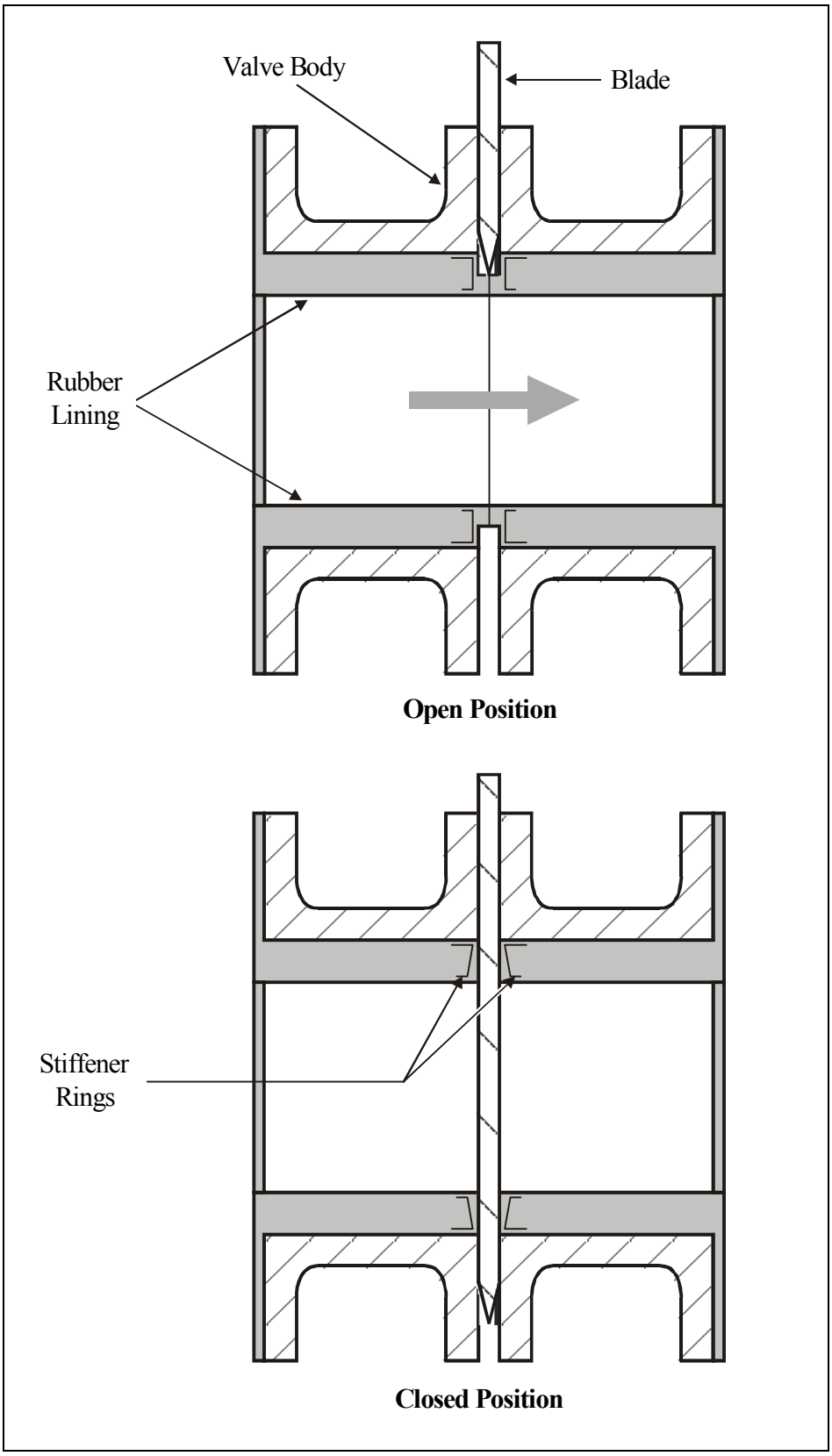

Figure 4-1
Cross-section of a Packingless Knife Gate Valve

However, most utilities are willing to accept short-term leaking in exchange for a valve that always closes tightly, and the rubber rings are relatively easy and inexpensive to change if they become damaged.

Other vendors also provide knife gate valves for recycle pump isolation, but most of these competing designs incorporate a seal at the bottom of the valve against which the valve gate must seal. Slurry solids can reportedly build up in the seal when the valves are open, and can prevent these valves from closing tightly and sealing off the slurry flow to the pump. Also, most of these valve types require packing around the valve stem , which can provide a source for slurry leakage if the packing becomes damaged or worn. Figure 4-2 illustrates a typical packed-stem knife gate valve.

Some utilities operating 1970s and 1980s vintage FGD systems have butterfly valves in recycle slurry pump isolation service. These utilities report ongoing problems with maintaining a tight seal with this valve type. Several have gone from natural rubber liners and seals to urethane in this service. However, they still report that they have to regularly send these butterfly valves out to be relined, to ensure they will tightly seal.

Several utilities reported problems with knife gate actuators. Electric, hydraulic, or pneumatic drives have been used in these applications. The most common problem appears to be under-sizing of these components, causing the valves to stick when called upon to cycle. Some electric drives have suffered gear failures. Most utilities have corrected such problems by upgrading valve operators with larger components. The best advice appears to be to provide liberal design margins when sizing slurry isolation valve operators.

Most FGD systems built in the 1980s and 1990s do not have pump discharge isolation valves, only suction isolation valves. This makes it more difficult to disassemble a pump casing for repairs while a module is on line, since the pump discharge line is open to flue gas from the modules. Two approaches are used to isolate pump discharge piping for pump maintenance. One is to use a large, inflatable bladder which is inserted through a port in the discharge piping and inflated to effect a seal. The other is to insert a metal “blind flange” by loosening the flange bolts on an expansion joint in the pump discharge line, and driving the blind between the joint flange and the piping flange.

The majority of utilities visited without discharge isolation valves use the bladder approach. While most found this to be an acceptable way to isolate a pump, one utility expressed dissatisfaction. With an 8-inch port on a 42-inch rubber-lined piping run, they have difficulty inserting the large bladder, particularly because the 8-inch port internal diameter is reduced by the rubber lining. Between abrasion damage while forcing the bladder through the port, and exposure to condensing flue gas, this utility reports that bladders only can be used once or twice, and represent a significant pump maintenance expense.

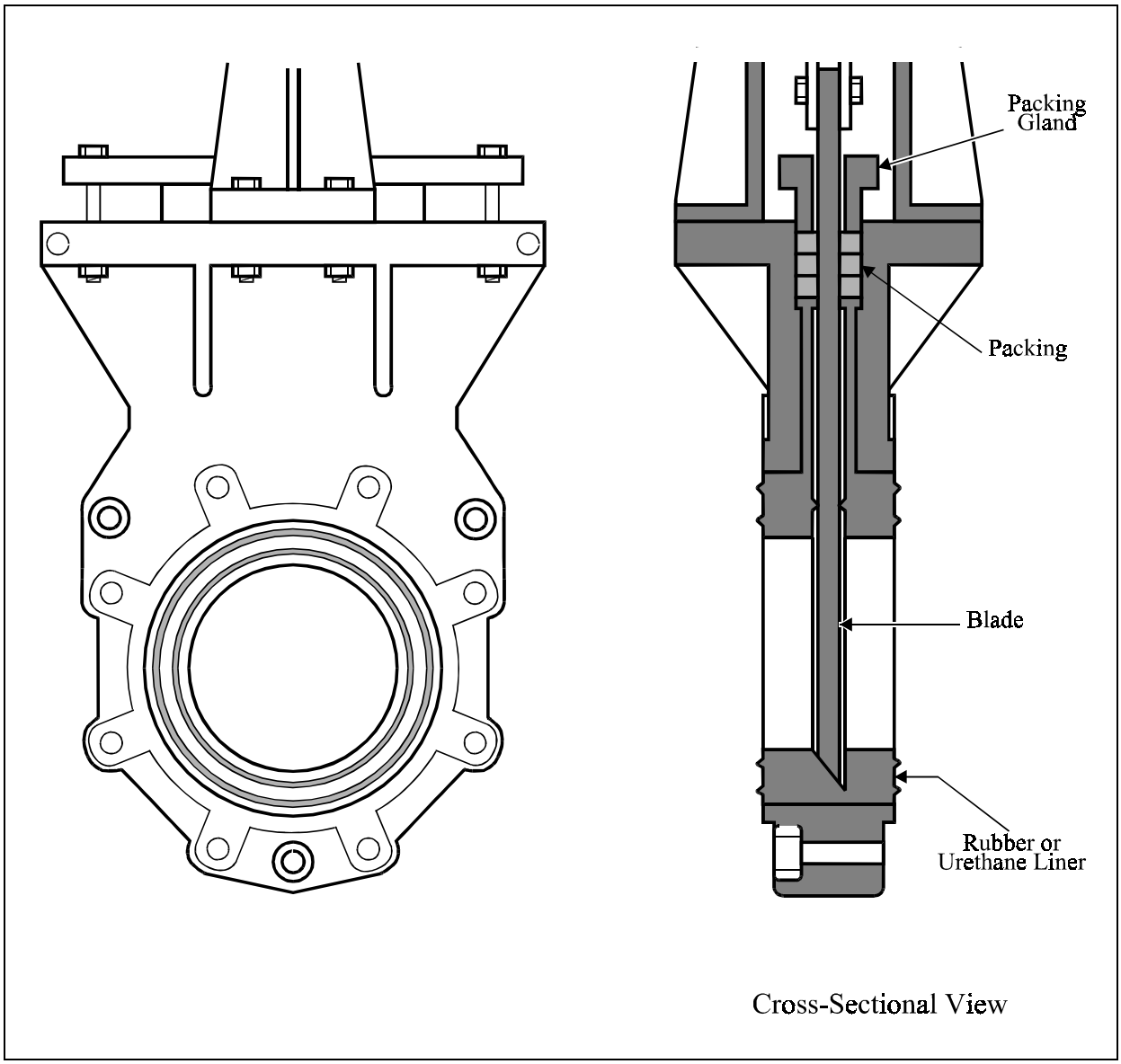

Figure 4-2
Knife Gate Valve

Reagent Slurry Feed Control Valves

Most of the systems visited as part of this phase of the project have used ground limestone reagent. However, the observations made about control valves for reagent makeup to the absorbers should also be applicable to lime slurry reagent.

In these visits to utility FGD systems, four distinct approaches to limestone reagent makeup control valves were identified. These were:

Fujikin Ceramic Ball Valve

Although these valves are relatively expensive, this was observed to be the most prevalent control valve for limestone reagent makeup to the absorber reaction tanks. This valve is available with a "V"-shaped ball opening that gives the valve an equal-percentage flow characteristic, which makes it more suitable for use as a control valve than a standard ball valve. The ceramic ball and liner make this valve very abrasion resistant. This valve type has been used extensively both as the original limestone valves in Phase I systems, and as a replacement valve in earlier systems. The Phase I units have seen Fujikin ceramic ball valves in service for six years with little or no required maintenance, while one 1980s vintage system has successfully used this valve type for nearly ten years. The latter system reported one valve ball failure, due to tramp material caught in the ball, and several that had to be disassembled and cleaned to remove tramp material, although with no permanent valve damage.

Another utility tested a Fujikin ceramic ball and reported problems with the ceramic ball cracking. Rather than attempting to resolve this problem, that utility settled on another type of valve, as described below. Cracking problems were not reported by any of the other systems that use this valve.

Clarkson Series C Muscle Valve

A number of systems report success using this valve type. In this valve, an elastomer "muscle" that is inflated with instrument air applies a constricting force equally around an elastomer sleeve through which the slurry flows. The force is applied equally to 360° around the circumference of the sleeve. Figure 4-3 illustrates the Clarkson Series C valve configuration. The valve reportedly controls from full flow down to 50% of full flow, and typically closes down to a minimum of 0 to 10% of full flow. This valve requires a nearby air accumulator if the utility desires that it fail in the closed position, and an isolation valve is required if zero slurry flow is required at times. The sleeve reportedly lasts much longer than in a typical pinch valve (e.g., from Red Valve or a Clarkson Series B valve), but still is a wear item that must be replaced occasionally. One Phase I system reported high maintenance requirements for this valve type in the first year or two of FGD system operation, including sleeve replacement, but since has operated several years with no significant valve maintenance.

Standard Pinch Valve

One utility had problems with cracking of the ceramic ball when they tested the Fujikin ceramic ball valve. Rather than investing further manpower and maintenance materials to try to resolve this problem, they standardized on a low-cost pinch valve for their limestone slurry control applications. They have a primary and a backup valve for each application, and just replace the $300 valve liners when they fail. This utility chose a Red Valve pinch valve, but several other vendors offer a similar style of valve (e.g., the Clarkson Series B valve).

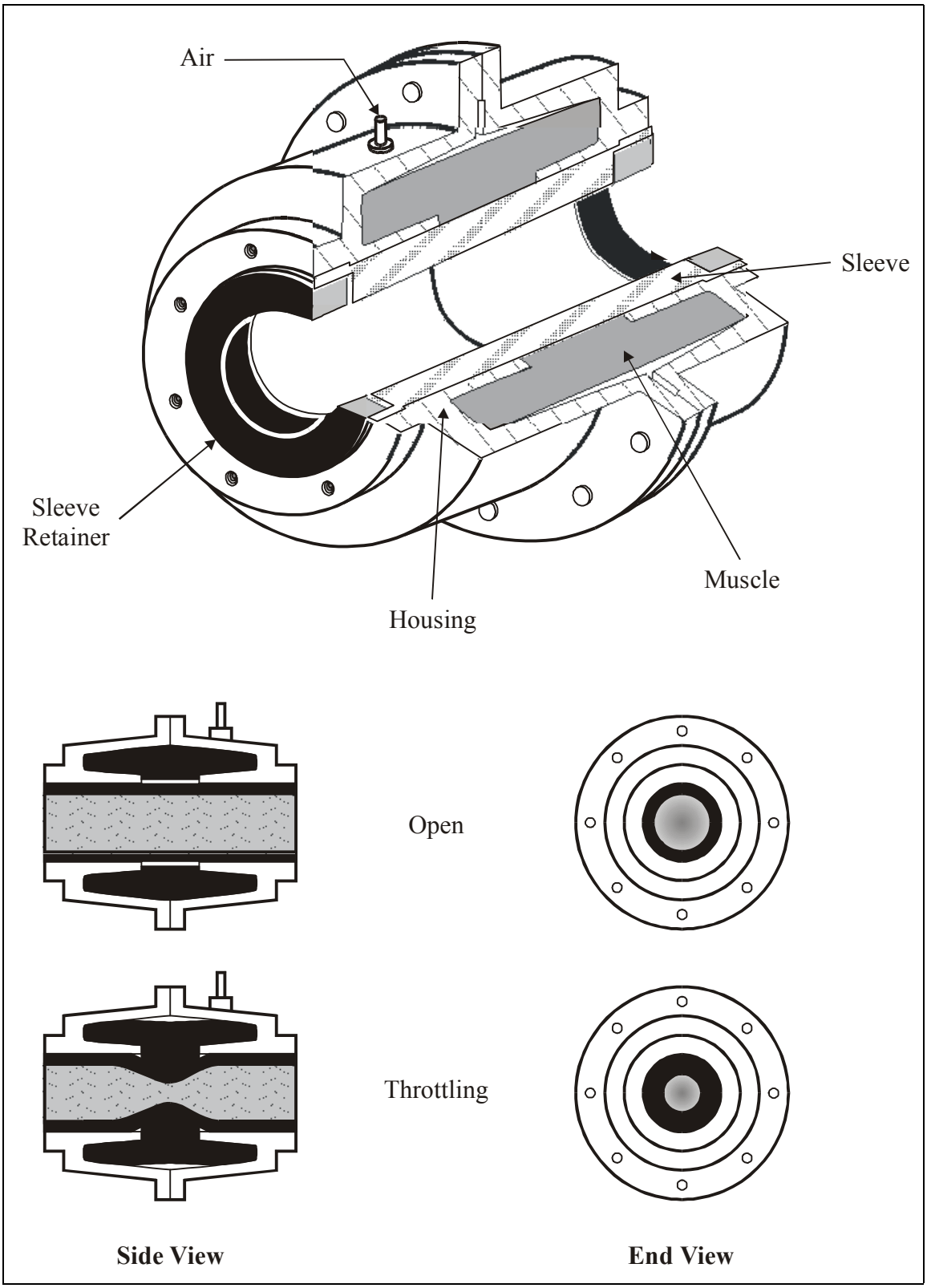

Figure 4-3
Clarkson Series C

(Source: The Clarkson Company, Reno, Nevada)

Knife Gate in Cycling Operation

Another utility had investigated the Fujikin ceramic ball valve, and has successfully tested a Clarkson Series C muscle valve. However, they did not feel that they realized enough benefit from the ability to provide smooth pH control to justify the expense of these valves. Instead, they use a low-cost knife gate from Newcon, which cycles from fully open to fully closed as the reaction tank pH varies from the low to high extremes of a pH control dead band.

Summary

There does not seem to be a preferred material of construction for recycle piping, either external or internal to the absorber vessels. For external piping, rubber-lined steel, FRP, and to a lesser extent, HDPE and alloy piping have been used with success, particularly in straight piping runs.

In and around piping reducers, elbows, and manifolds, though, FRP piping appears to be holding up better than rubber-lined piping. Whereas Phase I units originally equipped with rubber-lined piping have experienced failures in these areas, the Phase I units visited with FRP piping have not seen as much wear. Older (1980s vintage) units with FRP piping are just now beginning to approach the probable service life of their FRP piping in these high wear areas, although some patching with epoxy repair materials has extended the life of high wear areas.

This experience suggests that, even if an FGD system is designed to use rubber-lined pipe in straight piping runs, it may be advantageous to use fiberglass pipe in pump inlet and outlet diameter transitions (when the suction and/or discharge pipe diameters are larger than the pump flange diameters), and perhaps in elbows and manifolds. Also, it appears that wear could be reduced by making transitions as gradual as possible, and making all elbows with a long radius. Finally, the experience of one utility with wear in the straight piping run just downstream of a pump discharge transition suggests that it would be best to include a short straight section on the downstream end of spool pieces used in this service. This would put any wear downstream of the transition on the relatively short spool piece rather than in the long, straight run downstream. These suggestions would likely increase the cost of an initial installation, but should provide benefits in reduced piping wear and/or lower repair costs over the life of the FGD system.

One system each using HDPE and alloy piping have not reported any significant wear or failures in seven or more years of service. This limited experience suggests that these materials could provide relatively trouble-free service for many years. However, HDPE pipe usage is not possible in very large diameter piping (e.g., 42-inch) due to operating pressure limitations, and fittings may not be available to form complex manifolds. For alloy pipe, the biggest limitation is first cost, particularly for systems that expect to operate at high chloride levels and that would require C-class alloy. Also, experience with agitators (discussed in Section 7) suggests that in areas like diameter transitions and elbows, C-class alloy piping may be less erosion resistant than other, less chloride resistant alloys.

For internal, spray header piping, the industry appears to have settled on either FRP or alloy piping, with neither being a clear preference. Both are subject to erosion from the impingement of sprays from the next higher header level, and therefore require some form of external erosion

protection in these areas. Alloy piping has a higher first cost, but does not require as much internal support as does FRP piping.

For recycle pump isolation, the industry clearly prefers the Clarkson packingless Series KGA valves. For existing systems that use other valve styles, problems such as liner and seal wear, leaks in packing, and buildup of solids preventing tight sealing seem to be prevalent. Some utilities have had better success with urethane than natural rubber for liners and seals, but such problems have not been eliminated.

For reagent slurry control valves, there is a range of solutions available. In relative terms, the choices appear to be:

- High first cost, low maintenance Fujikin ceramic ball valves;
- Moderate first cost, low to moderate maintenance Clarkson Series C muscle valves;
- Low first cost, higher maintenance standard pinch valves, from a number of suppliers; or
- Low first cost, low to moderate maintenance on-off valves (usually knife gates) with the disadvantage of less precise pH control in the absorber reaction tanks.

The choice amongst these approaches appears to be driven by the utility's preference for low first cost versus low maintenance requirements. Of the utilities visited as part of this project, most were content with the choice they had made from these four approaches.

References

1. Radian International LLC, *Electric Utility Engineer's FGD Manual,* U.S. Department of Energy Pittsburgh Energy Technology Center, Grant No, DE-FG22-94PC94256, Pittsburgh, PA, May 1996.

5
DUCTWORK AND DAMPER MAINTENANCE ISSUES

In the project-specific survey completed in 1997/1998, FGD system ductwork and dampers consistently ranked in the top-five FGD maintenance issues for survey respondents. In the follow-up visits being conducted in the current phase of this project, maintenance personnel at each of the nine stations visited were asked about ductwork and damper materials of construction, and any current or previous maintenance issues with each. The following summarizes those results.

Ductwork Maintenance Issues

FGD Inlet Ductwork

The systems visited were relatively consistent in terms of inlet ductwork materials. All use some grade of mild carbon steel up to a transition point just upstream of the absorber(s). The transition point is most commonly an expansion joint or an isolation damper. Few reported maintenance issues for their mild steel inlet ductwork, as the flue gas is relatively hot and dry at these locations.

One exception is a Phase I station that had a single FGD system retrofitted to two adjacent units. The FGD system is located near Unit 2, so the flue gas run from Unit 1 is relatively long. The flue gas cools to below the acid dew point in the long duct run, and the station is experiencing severe corrosion in and around the induced draft (ID) fan which is located just upstream of the FGD system. The corrosion problems had become extensive after 5-1/2 years of operation. The plant recently patched a number of large holes in the ID fan inlet ductwork, but had not yet decided on a long-term solution at the time of the visit.

Nearly all of the units use corrosion resistant materials in the short run of ductwork that enters the FGD absorber(s), in the wet-dry interface zone. Most prevalent is C-276 alloy, either as solid plate, roll-clad plate, or applied to mild steel as wallpaper (with seal welds between sheets). However, a number of other alloys are being used in this service. In some systems C-22® and/or C-2000® alloys have been used instead of C-276. Wallpaper is sometimes applied only to the floor and partway up the duct wall instead of to the entire duct. Other alloys used in this service include Alloy G-3 wallpaper, Alloy G-30®[6] plate, Alloy 625 plate, and 300-series stainless steel

[6] G-30® is a registered trademark of Haynes International, Inc.

plate. One system uses Elf Atochem's PENNGUARD®[7] foamed borosilicate glass block liner in the wet-dry interface region of their inlet duct.

Two problems were reported with inlet ductwork in the wet-dry interface zone. One is that the wet-dry interface sometimes extends further into the ductwork than expected, and utilities have had to go in and add wallpaper further upstream of the absorber(s). The utility with the PENNGUARD® block liner reported the second problem. After 13 years of operation, some of the block has sustained physical damage from duct cleaning during outages. They plan to replace the block with alloy wallpaper at a future outage.

Even where alloy lining resists corrosion, the utility can experience a maintenance problem in having to clean solid deposits from the wet-dry interface area. Some plants have installed spray headers to help keep the floor of the duct in this area clean.

Outlet Ductwork

Most of the Phase I units were designed to treat 100% of the flue gas from the unit(s) scrubbed, and operate with a wet stack. Some of the earlier units bypass a portion of the flue gas, to effect some level of bypass reheat. Some earlier units have indirect reheat, although many of those have abandoned their reheat systems as being too expensive to maintain and operate. Several of the systems visited as part of this project were originally equipped with indirect reheat but no longer operate those systems.

Outlet ductwork materials are similar to those described above for inlet wet/dry interface ductwork. Alloys used include solid, roll-clad or wallpapered C-276, wallpapered C-22® or C-2000®, and solid Alloy G, Alloy 625, and 317 LMN plate. The Phase I systems visited almost all use C-276 in this service, although one with absorbers close coupled to the stack uses 317 LMN plate. Many of the systems built in the 1970s and 1980s that now have alloy wallpaper in this service installed the alloy as a retrofit. Several systems built in the 1970s and 1980s use mild steel with flake-glass reinforced vinyl ester coatings in saturated flue gas service (i.e., in systems with no form of hot gas bypass or reheat, or upstream of the bypass mixing zone for those with bypass reheat). Several systems use PENNGUARD® block in portions or all of their outlet ductwork.

The authors are aware that a number of utility FGD systems use FRP outlet ducts and/or stack liners. However, none of these systems were included in the nine stations visited.

A number of utilities reported quality control issues with wallpaper installations in FGD outlet ducts. One utility is finding corrosion along welds and heat-affected zones in C-22® wallpaper, where slurry or condensate pools in the duct. They attribute this corrosion to the contractor either using improper weld material, or welding procedures that allowed some of the mild steel under the wallpaper to be drawn up into the welds. They have been correcting this corrosion by seal-welding C-2000® strips over the original welds and heat-affected zones. Other utilities reported similar corrosion problems along welds in wallpaper installations. In general, weld materials

[7] PENNGUARD® is a registered trademark of Elf Atochem North America

should be of a higher alloy than the wallpaper material, where possible, to help avoid such problems.

Another utility reported corrosion near expansion joints, where the wallpaper contractor did not do a good job of ensuring that the wallpaper coverage continued uninterrupted. This utility has had to continually repair these areas during outages, trying to improve the integrity of the wallpaper coverage. Several utilities reported corrosion of internal bracing. One utility reported that, although their outlet ductwork is wallpapered with C-22®, internal braces were constructed of Alloy G and Alloy 625. Both materials reportedly began to corrode (the Alloy 625 first), and the utility wallpapered all of the braces with C-22® to prevent further damage. Another utility has had to replace Carpenter 20 internal bracing with C-276.

One utility using a vinyl ester coating in their outlet duct reports that although they have to reline their outlet ducts after several years, they consider they are getting good service out of this material given the relatively low cost of application. As with any lining applied over mild steel, they report that quality control of the installation process is most important to ensure good coating performance. Another utility that uses a vinyl ester coating in their absorber outlet ducts has retrofitted C-276 wallpaper in the floor and partway of the side walls of the mixing zone where hot bypass gas mixes with the scrubbed gas.

Flue Gas Damper Maintenance Issues

All of the systems visited in the current phase of this project are equipped with isolation dampers in their individual absorber inlet and/or outlet duct runs. Most of these are guillotine-style dampers, although some two-stage, louver-style dampers are also used. Figures 5-1 and 5-2 illustrate typical guillotine and louver-style dampers, respectively. Butterfly-style dampers are used in some older systems. Some FGD systems are also equipped with louver-style absorber flow control dampers.

Inlet dampers are typically constructed of mild steel, although alloys such as C-276 are often used for seal material. One Phase I unit uses Alloy G-30® for its inlet dampers rather than mild steel. Outlet dampers are generally constructed of the same alloys as are used for FGD outlet ductwork, such as Alloy 625, 317 LMN, or C-276. Most use C-276 seals in their outlet dampers. Information collected about dampers at the nine stations that were visited as part of this project is summarized by damper type below.

Louver-style Dampers

A number of the systems visited used double-louver dampers for isolation service. Almost every system that uses double-louver dampers in this service reported problems. By design, the louver blades are always exposed to flue gas, whether the damper is in the open or closed position. During normal operation in the open position, fly ash and/or scrubber solids tend to build up between the edge of each louver blade and the side of the damper, and on the seal strip on each louver blade. When called upon to close, the louvers tend to bind because of the solids buildup, and not close tightly. Several utilities with louver isolation dampers reported having to send an operator or maintenance person to manually force the dampers to a fully closed position. In most

cases, there is a double row of louvers with seal air added between the sets. Most utilities reported difficulty in getting an adequate seal on the louvers to allow the seal air pressure to reach desired values.

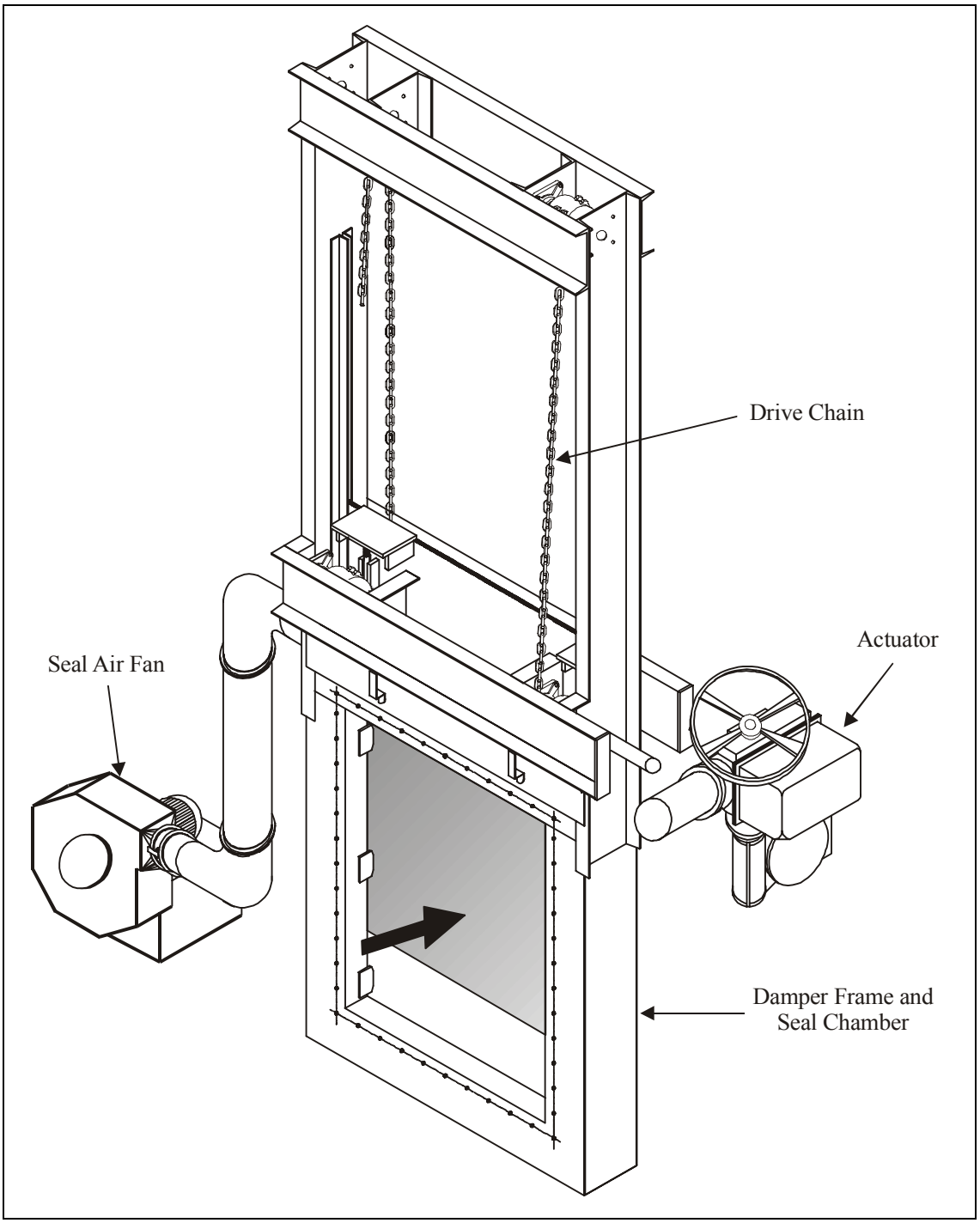

Figure 5-1
Typical Guillotine Damper

(Source: EFOX, Inc., Cincinnati, Ohio)

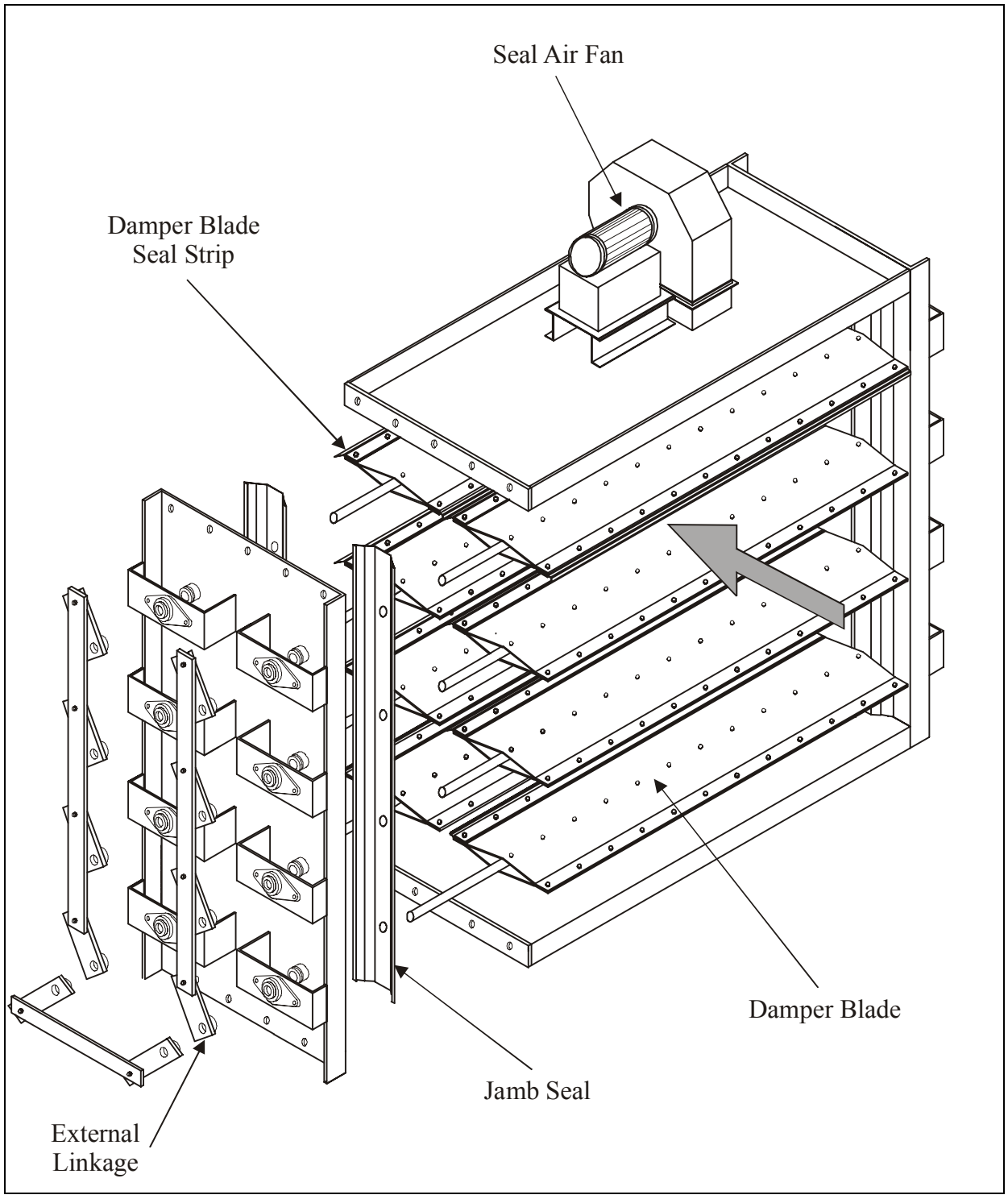

Figure 5-2
Typical Two-Stage Louver Damper

(Source: EFOX, Inc., Cincinnati, Ohio)

The utilities visited that have louver-style isolation dampers were resigned to living with these maintenance issues, and no "break-through" solutions were identified by any of the utilities visited. One utility had replaced problematic louver-style isolation dampers with guillotine dampers.

Butterfly Dampers

Some older FGD systems with round cross-section ductwork use butterfly-style dampers for isolation service. These tend to get fly ash and/or scrubber solids material buildup on the sealing surfaces, such that they do not seal well when closed. One utility that has butterfly-style isolation dampers is looking to replace them with another style.

Guillotine Dampers

This damper style is most prevalent for absorber isolation service. Guillotine damper vendors represented at the sites visited include Wahlco, Mosser, Damper Design, Inc., and Air Clean Damper Co. An advantage of guillotine dampers over other styles is that, during normal operation, the flat guillotine blade is fully retracted from the duct and is not exposed to flue gas. Thus, the blades tend to stay relatively clean. However, the integrity of the seals where the blade enters the duct upon closing, and along the sides and bottom of the closed guillotine are important for proper damper operation.

A common problem on older (1970s and 1980s-vintage) guillotine dampers is warping of the blade due to thermal stresses or other forces. A warped blade will not smoothly enter the opposing leaves that form the upper and side seals (see Figure 5-3), which can result in seal damage. Newer guillotine dampers have guide wheels that ensure the alignment of the blade with the seal opening, and greatly reduce seal damage when the damper is being closed. Also, newer damper designs incorporate improved seals such as multi-leaf designs that are more flexible and seal more effectively than single leaves, and externally installed designs that are easier to change. Several utilities with older guillotine dampers have retrofitted guide wheels and newer seal designs to improve damper performance.

Another common problem on older guillotine dampers has been marginal strength of the drive mechanisms that cycle the blades. Several utilities reported excessive flexing of the driveshafts for the chains or rack and pinions that operate the blades, when the dampers were first installed. These drive mechanisms were upgraded by the damper vendors. Current guillotine damper designs for FGD service tout heavy duty operating hardware.

Most utilities use alloys such as C-276 for seal material. However, several utilities commented that even C-276 seals fail, due to either mechanical or corrosion damage. The seals on guillotine dampers tend to operate with ambient air on one side and hot, moist flue gas on the other, which leads to condensation and corrosion on the flue gas side.

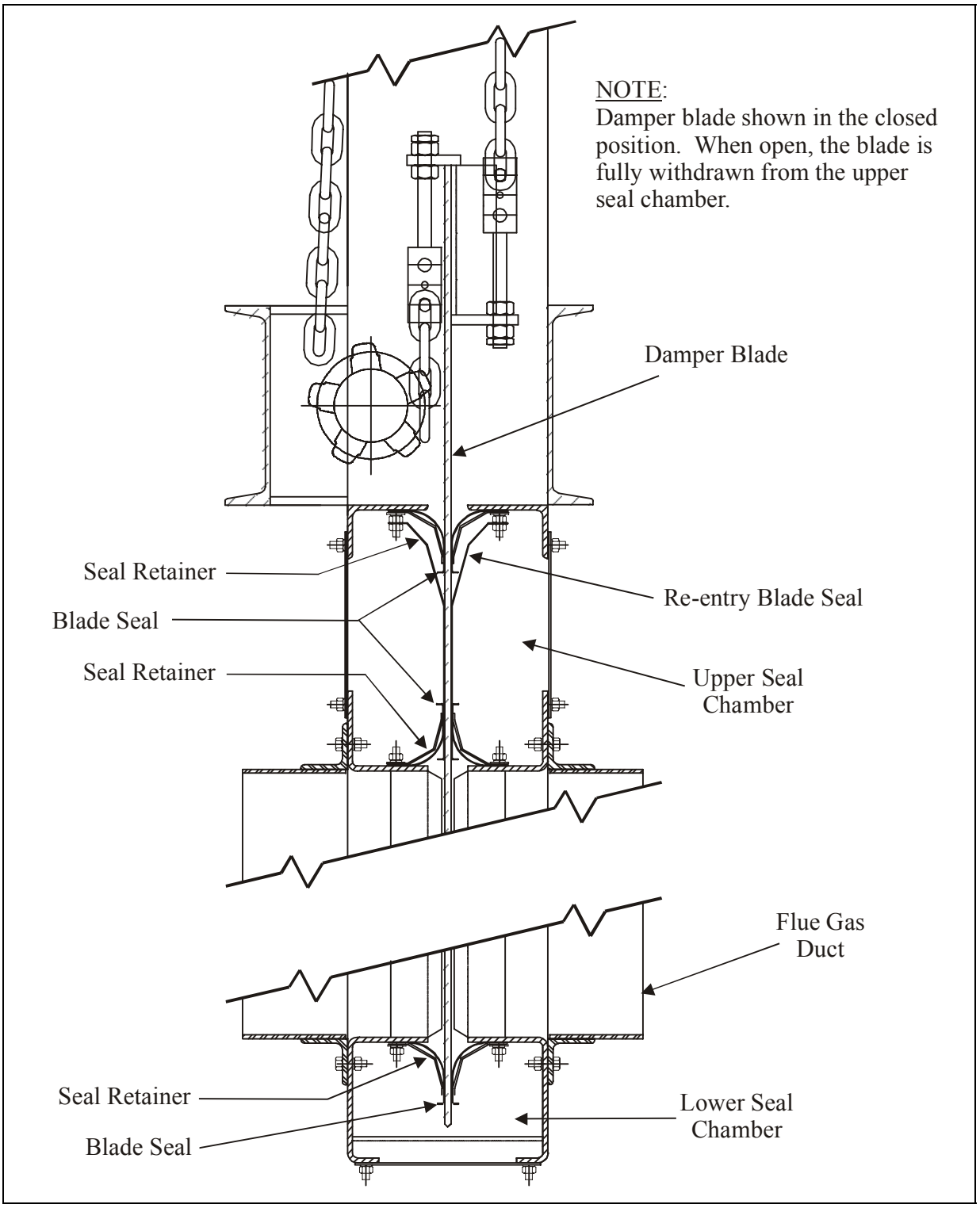

Figure 5-3
Typical Guillotine Damper Seal Design

(Source: EFOX, Inc. Cincinnati, Ohio)

Seal Air Fans

Many utilities reported that seal air fans are high-maintenance items. In most systems, fans are located near each damper. Due to inevitable seal leaks, the fans often operate in a corrosive external environment. They are generally operated continuously, and the ductwork typically vibrates, which can cause fatigue damage to the fan mounts, motors, etc. Some installations have gone to centrally mounted seal air fans, in a more benign location, with duct runs to each damper. Although there are costs associated with running ductwork to each damper, fan maintenance appears to be greatly reduced by this approach.

Summary

For FGD inlet ducts, mild steel can generally be used upstream of the wet/dry interface at the absorber inlets. At the wet/dry interface, C-series alloys appear to be most widely used, and to provide the highest level of resistance to general and pitting corrosion. Plants that are currently using other materials and that are experiencing failures would probably be best advised to retrofit a C-series, seal-welded wallpaper in this area, particularly in the floor and partway up the side walls of the duct.

Other, lower nickel content alloys such as G-series alloys, Alloy 625, and even 317 LMN stainless steel have been used in this service in systems operated at relatively low chloride levels. While these alloys are generally less expensive than the C-series alloys, use of a lower nickel alloy introduces a technical risk of corrosion damage if chloride levels become elevated in the wet/dry interface due to evaporation and/or enrichment under deposits.

PENNGUARD® block has been used successfully for about 13 years in this service in one 1980s-vintage FGD system. However, even that utility plans to retrofit C-series alloy wallpaper because of mechanical damage to the block over time while cleaning deposits from the duct floor.

For outlet ducts in systems with no reheat, a slightly broader range of options is available. All of the materials mentioned above for the inlet wet/dry interface zone also could be used in the outlet duct. The lower nickel content alloys probably represent less of a risk in this area, since the flue gas will always be saturated in this ductwork area and there is less likelihood that chloride concentrations will cycle up locally. Resin-based coatings, such as vinyl esters reinforced with flake glass, can be used in this service over carbon steel ducts. However, utilities using such coatings in outlet ducts should be resigned to minor touch-ups at every outage, and plan for entire replacement of the coatings on a regular basis (e.g., every four to six years).

For systems with reheat and/or gas bypass mixing in the FGD outlet duct, the material of choice appears to be C-series alloys, in the form of wallpaper, clad plate, or solid plate. For wallpaper applications, quality control during installation is of great concern. Installation issues include ensuring appropriate weld materials, proper welding procedures to avoid drawing underlying metal into the alloy, and provisions for 100% coverage of internal bracing, duct corners and edges near expansion joints. Leak checking of all seal welds is also an important QA/QC measure.

For FGD isolation dampers, guillotine dampers appear to be the favored configuration for ensuring man-safe isolation. Damper blade materials are generally the same as those used for the ductwork in the location of the damper. The damper frame and particularly the seals may be constructed of a higher alloy such as 625 or C-series alloys, because of the potential for condensation and acid concentration on the flue gas side when ambient seal air is used.

The damper manufacturers serving the FGD marketplace have upgraded their designs based on lessons learned over the past 20 years. Guillotine damper designs now include rollers and guides to ensure proper alignment of the blade when it is reinserted on closure, to avoid seal damage. Other upgrades include better materials of construction on seals and frames, stronger and more powerful blade operating mechanisms to ensure blade opening and closure, and seal design changes to make them more durable, effective, and easier to change. FGD systems installed in the 1970s and 1980s, and that have problematic dampers may be able to improve damper reliability by retrofitting guides, drives, and/or seals from modern designs by the same or an alternate vendor.

No upgrades to improve louver damper reliability were identified in the site visits conducted as part of this project.

6
REAGENT PREPARATION EQUIPMENT MAINTENANCE ISSUES

In the FGD maintenance survey conducted during an earlier phase of this project, ball mill limestone grinding equipment was listed as a top-five maintenance labor item for high-sulfur FGD respondents, and a top-five maintenance materials item among all wet FGD system respondents. In a follow-up telephone survey, though, virtually all respondents stated that ball mill maintenance requirements for their system were not considered excessive, but represented routine replacement of wear items.

In site visits conducted as part of the current phase of this project, it became clear that for many FGD systems, maintenance requirements for other FGD components have been reduced and FGD system run times between outages are being extended. Ball mill limestone grinding systems have begun to represent a more significant portion of the FGD maintenance requirement, and in some cases ball mill maintenance may limit FGD availability. This section describes the efforts of some limestone FGD systems to reduce ball mill maintenance requirements.

For lime-based FGD systems, most listed their lime slaking systems as top-five maintenance labor and/or maintenance materials items. However, there is a wide variety of lime slaker types used in FGD service, so it was difficult to discern trends in maintenance issues or efforts to reduce maintenance requirements. This section summarizes the information collected about lime slaker maintenance issues, though.

Limestone Grinding Systems

Of the wet FGD systems that participated in the FGD maintenance ranking survey conducted earlier in this project, the majority (18 of 22 responses) used limestone reagent. Similarly, 12 of the 14 FGD systems visited as part of the site visits included in this project used limestone as the FGD reagent.

Most limestone FGD systems use closed-circuit, horizontal, wet ball mills to grind limestone. Closed-circuit systems use hydroclones to size separate the mill product slurry, with an oversize particle slurry being recycled to the mill feed and an undersize particle slurry flowing to a product limestone slurry storage tank. Figure 6-1 illustrates a typical closed-circuit, horizontal ball mill grinding circuit.

Currently a small number (fewer than five) U.S. utility limestone FGD systems use vertical stirred mills for reagent grinding. However, none of the maintenance ranking survey respondents use vertical stirred mills, nor do any of the 12 limestone FGD systems visited. Consequently, this section only discusses horizontal ball mill grinders.

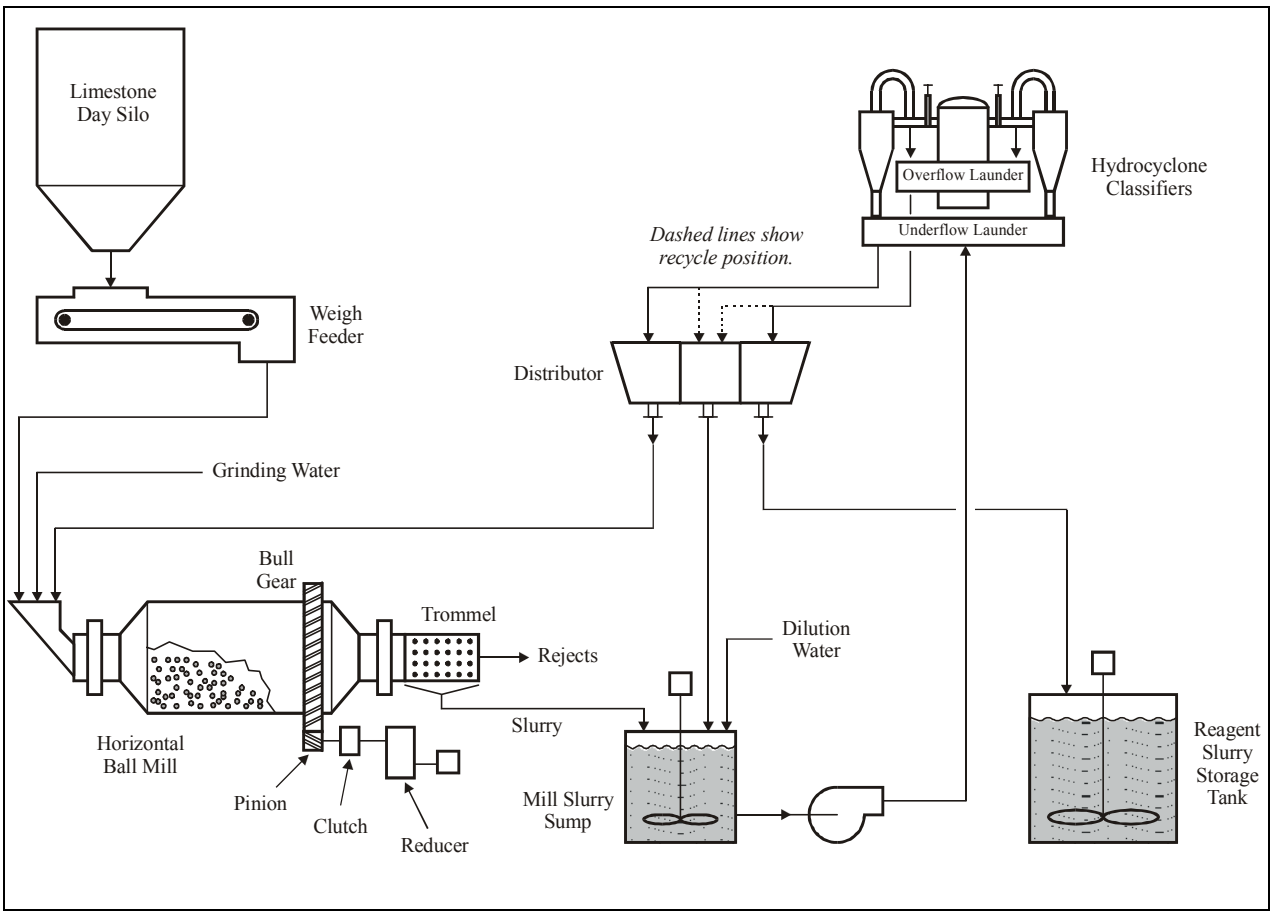

Figure 6-1
Horizontal Mill Grinding System

A few limestone FGD systems use alternate reagent preparation techniques. At least one system uses a roller mill to dry grind limestone powder, several use limestone that is ground off site by third parties, and a few use finely divided calcium carbonate byproduct from nearby water treatment plants. Because of the limited number of these other circumstances, and because in many cases reagent preparation maintenance issues are within the scope of third party suppliers, no attempt was made to address reagent preparation maintenance issues for these situations.

As illustrated in Figure 6-1, a horizontal ball mill grinding circuit consists of a number of components, including limestone day silos, weigh feeders, ball mills, mill slurry sumps and pumps, hydroclone classifiers, slurry distributors, and reagent slurry storage tanks. This discussion focuses on the ball mill portion of that circuit, as it was the ball mills themselves that were listed as a top-five maintenance item in the earlier survey, not any of the balance of system components. The most significant maintenance items include the feed chute through which raw limestone is charged to the mill, the bull and pinion gears that drive the mill, and lifter bars and liners internal to the mills. These items are described and discussed below.

Limestone slurry piping wear in the reagent preparation area can also be a significant maintenance issue. However, slurry piping maintenance issues were discussed previously in Section 4, so limestone slurry piping is not discussed further in this section. In general, fiberglass reinforced polyester (FRP), high-density polyethylene (HDPE), rubber-lined mild steel, and basalt-lined mild steel has been used with varying success in limestone slurry service.

Background

During the FGD site visits conducted as part of this project, it became obvious that the relative significance of ball mills in the FGD maintenance effort, and the importance of the ball mills to FGD system reliability vary widely from system to system. Issues such as the amount of redundancy and the capacity of the limestone grinding system as well as specific limestone characteristics cause this variation.

FGD limestone preparation systems are designed with a given level of redundancy for a design coal. After the plant is in operation, this redundancy is greatly affected by later decisions. At one extreme are plants that are designed for a relatively high coal sulfur content, yet actually fire a coal with a much lower content. Such plants typically operate their ball mills only a few hours per day, and might be able to go years without significant ball mill maintenance expenditures. At the other extreme are plants that have lost much of their design redundancy due to one or more of many factors, such as:

- Firing coals with a higher sulfur content than the design coal;
- Grinding the limestone reagent to a finer particle size than the original design value to improve limestone utilization and/or FGD system reliability;
- Conversion to a harder limestone reagent than the design stone;
- Additional limestone reagent requirements because of overscrubbing with the existing FGD system, to meet requirements of Phase 2 of Title IV of the 1990 Clean Air Act amendments; and
- Additional limestone requirements because of FGD system retrofits to other units at the same station, again as a means of meeting Phase 2 requirements, without adding additional limestone grinding capacity.

Particularly for the last situation, the limestone grinding system can become a critical component of the station's FGD systems reliability, with unplanned grinding system outages potentially causing FGD system shutdown.

Other trends over the past years have made limestone grinding system reliability more of an issue. Power plants are running for longer periods between planned outages. Better control of limestone FGD system chemistry, such as through forced or inhibited oxidation, has reduced the frequency of FGD outage requirements for scale cleanup. Similarly, the use of mechanical seals and alloy impellers and liners in FGD recycle pumps has reduced the need to shut down for pump maintenance.

Thus, FGD system reliability may now be adversely affected by ball mill shut downs at three-month or six-month intervals to inspect and replace wear parts such as lifter bars and/or liners. In the past, this maintenance could be conducted while the FGD system was off line. FGD operators would now like to extend routine ball mill outage inspection and component replacement frequencies to a year or greater. The remainder of this section describes ball mill components that tend to require regular maintenance, and efforts by FGD operators to extend the life of these components and/or to reduce maintenance manpower requirements.

Limestone Feed Chute

As shown in Figure 6-1**,** raw limestone is typically metered to the ball mill in operation through a weigh feeder. From the feeder, the limestone, which typically has a top size in the range of 3/8-inch to ¾-inch, drops through a feed chute to the ball mill inlet. The feed chute is usually angled and/or has an elbow at the bottom where the raw stone turns from dropping vertically to flow horizontally into the mill. Many systems report feed chute wear as an ongoing maintenance issue for ball mill operation.

Feed chutes and elbows may be constructed of hardened steels, mild steels with rubber or synthetic elastomer liners, or mild steels with bolt-in, replaceable liners of stainless steel or other materials. Some abrasion resistant materials such as basalt or ceramics generally cannot be used in this service because the feed chutes are also used to charge fresh grinding balls, and the impact from dropping the balls into the chute would tend to crack these relatively brittle materials.

Of the FGD systems visited, virtually all of the systems with highly utilized grinding circuits reported feed chute wear as an ongoing maintenance issue. Most were experimenting with alternate liner materials in an effort to reduce wear and extend feed chute and elbow life. One plant reported success using a vacuum-bonded ceramic tile liner to extend the life of feed chutes between their limestone storage silos and their day silos. They report that this lining has extended feed chute life from about six months to approximately five years. However, this feed chute to the day silo is not used to charge balls to the mill; a similar ceramic tile liner would not likely hold up to ball charging in the mill feed chute.

Of the 12 limestone FGD systems visited, none appeared to have made a “breakthrough” in reducing ball mill feed chute wear. The telephone interviews conducted identified one low-sulfur-coal FGD system that had a vendor (RPM Solutions of Rapid City, South Dakota) weld in chromium carbide material to provide a wear-resistant surface in their ball mill feed elbow. This material reportedly has held up well in over one year of service, including a period of high mill utilization while a mill for an adjacent unit was being overhauled. Based on this success, they have had RPM Solutions prepare a weld-repaired feed chute for a second mill at this station. However, note that it is difficult to compare anecdotal information about feed chute and elbow wear and the effectiveness of solutuions because of site-specific variations such as ball mill run times; feed chute angles; and limestone properties like size, shape, and abrasiveness.

Bull Gear and Pinion Gear

Ball mills typically rotate at 15 to 20 rpm. As the mill rotates, lifter bars raise a portion of the charge of steel balls within the mill. These balls tumbling back down onto reagent and other balls impart the grinding action. The mill rotation is driven by an electric motor, through a gearbox, clutch, and pinion gear. The pinion gear drives a bull gear, which is attached to the circumference of the ball mill shell (see Figure 6-1).

The alignment of the pinion gear to the bull gear is crucial to the life of these components. The teeth of the pinion gear must engage the teeth of the bull gear to a specified depth. Too shallow or too deep engagement will result in excessive wear of one or both gears. Similarly, the pinion gear and bull gears must squarely engage one another with contact occurring within the middle of each tooth surface. Misalignment can also cause accelerated gear wear.

None of the FGD systems contacted cited excessive bull gear or pinion gear wear as a ball mill maintenance issue. However, gear alignment checks at manufacturer's specified intervals represent an ongoing ball mill maintenance requirement. One FGD operator reported the adaptation of a diagnostic tool that was a particular timesaver in checking gear alignment. They use a non-contact, infrared thermometer with laser sighting to measure temperatures across the face of pinion gear teeth. By observing temperatures from side to side on these gears while the mill operates, they can determine whether the pinion gear depth and alignment is set according to specifications.

Mill Shell Plates and Lifter Bars

Horizontal ball mills are typically constructed of a steel shell with bolt-in rubber liners. The liners typically consist of a number of pieces, but the primary wear parts are the shell plates and lifter bars that line the circumference of the mill's shell. The liners on the heads of the mill (the ends of the cylinder) are also sometimes frequent wear items. Figure 6-2 illustrates a typical shell plate liner and lifter bar arrangement. The lifter bars raise and drop balls as the mill rotates to create the tumbling action that grinds the reagent. The abrasive actions of the balls tumbling against the reagent and one another also wears the lifter bars and shell plate liners.

Most operators of high-sulfur FGD systems inspect ball mill internals on three-month to six-month intervals to determine when these wear components should be replaced. The risk of not inspecting often enough is that a lifter bar and/or shell plate liner could wear through, allowing damage to the underlying steel shell. On low-sulfur systems, inspection intervals may be extended because the mills are typically operated less frequently.

Lifter bars and shell plate liners may need to be replaced at frequencies ranging from every few months to after numerous years of service, depending on mill circuit utilization and stone properties. Lifter bars tend to wear at higher rates on the feed end of the mill. Some operators flip the bars from end to end to extend their service life, while others feel it is more cost effective to just replace the bars rather than to expend the maintenance labor to flip them. One FGD system has experimented with taller lifter bars as a means of extending lifter bar life. However, this change can also affect mill performance, as the height of the lifter bars affects the amount of lifting of the ball charge and the amount of impact between balls.

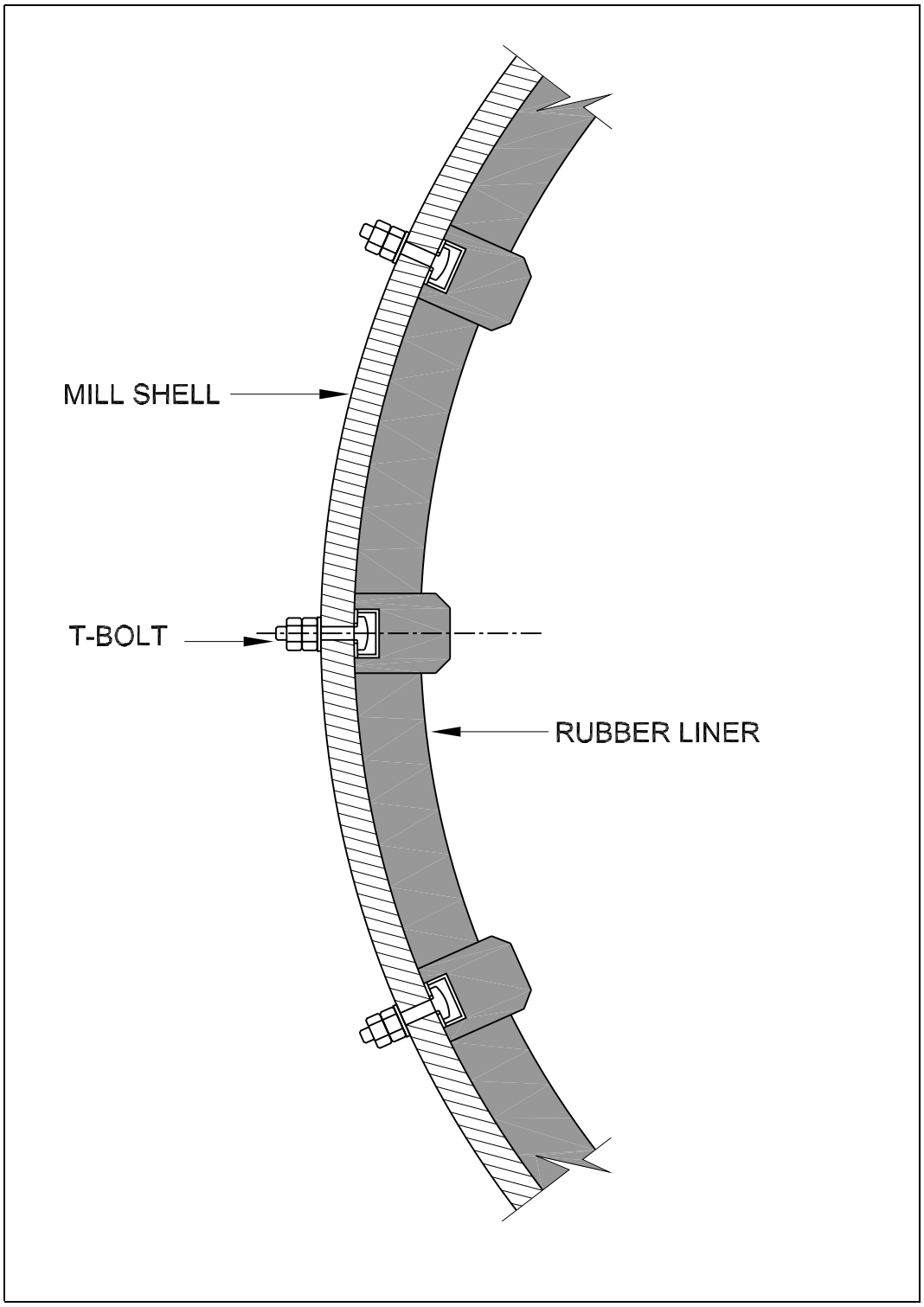

Figure 6-2
Typical Shell Plate Liner and Lifter Bar Arrangement

Some FGD system operators have begun to experiment with alternate liners as a means of increasing intervals between routine replacement of these components. One FGD system sought a ball mill lining that would last two years, rather than the 12-months they typically get out of standard rubber lifter bars and shell plates. Their vendor, Svedala Grinding, specified a "poly-met" lining, which is expected to provide a 30-month service life.

The poly-met liners have a hardened steel insert on the leading edge of the lifter bars. The hardened steel gives a longer service life than a rubber lifter bar, but because the steel is flexibly attached to a rubber lifter bar, the liner retains much of the flexibility and noise attenuation of a rubber liner. Figure 6-3 illustrates a cross-sectional view of a poly-met lifter bar.

The system operator reports great success to date with this style of lifter bar. The poly-met lifter bars were installed in one mill in April 1999, and to date have operated 13,500 hours, with the mill having ground over 380,000 tons of limestone. Based on observed wear, they expect these lifter bars to remain in service until October 2002, which corresponds with the projected life of 30 months. The only problem they have encountered with these bars has been some minor "chunking" metal loss on some bars, which appears to be a quality control issue on the hardness of the steel portion of the bars. Based on the positive experience with this first mill, a similar style of metal-tipped lifter bars supplied by Rubber Engineering has been installed in a second, Fuller brand mill at the station.

Another FGD system operator is testing a "double wave" liner available from Svedala as a replacement for a standard rubber lifter bar and shell plate arrangement. Figure 6-4 illustrates a cross-sectional view of a double-wave shell-plate liner. The double wave liner was developed for use in other grinding applications, to reduce mill power draw and to lower ball consumption. It appears that in limestone grinding applications, increased liner life (relative to conventional, smooth-surface shell plates) may also result.

This FGD operator has seen an improvement in mill performance resulting from the change to a double wave liner, with the product fineness going from 95.5% minus 325 mesh to 97.7%, while the mill power consumption decreased by 1% and the mill throughput increased by 8%. In addition, liner wear measurements have indicated a significant increase in liner life expectancy. While the improvement in liner life has not yet been quantified, the FGD system operator has reduced the liner replacement stock on site in anticipation of improved service life. However, it should be noted that one of the 12 limestone systems visited as part of this project reportedly experimented with double-wave liners, and reported no improvement either in mill performance or liner life.

Lime Slakers

A number of different devices are used as lime slakers in U.S. FGD applications. These include detention-type slakers, paste slakers, horizontal ball mills, and vertical stirred mills.

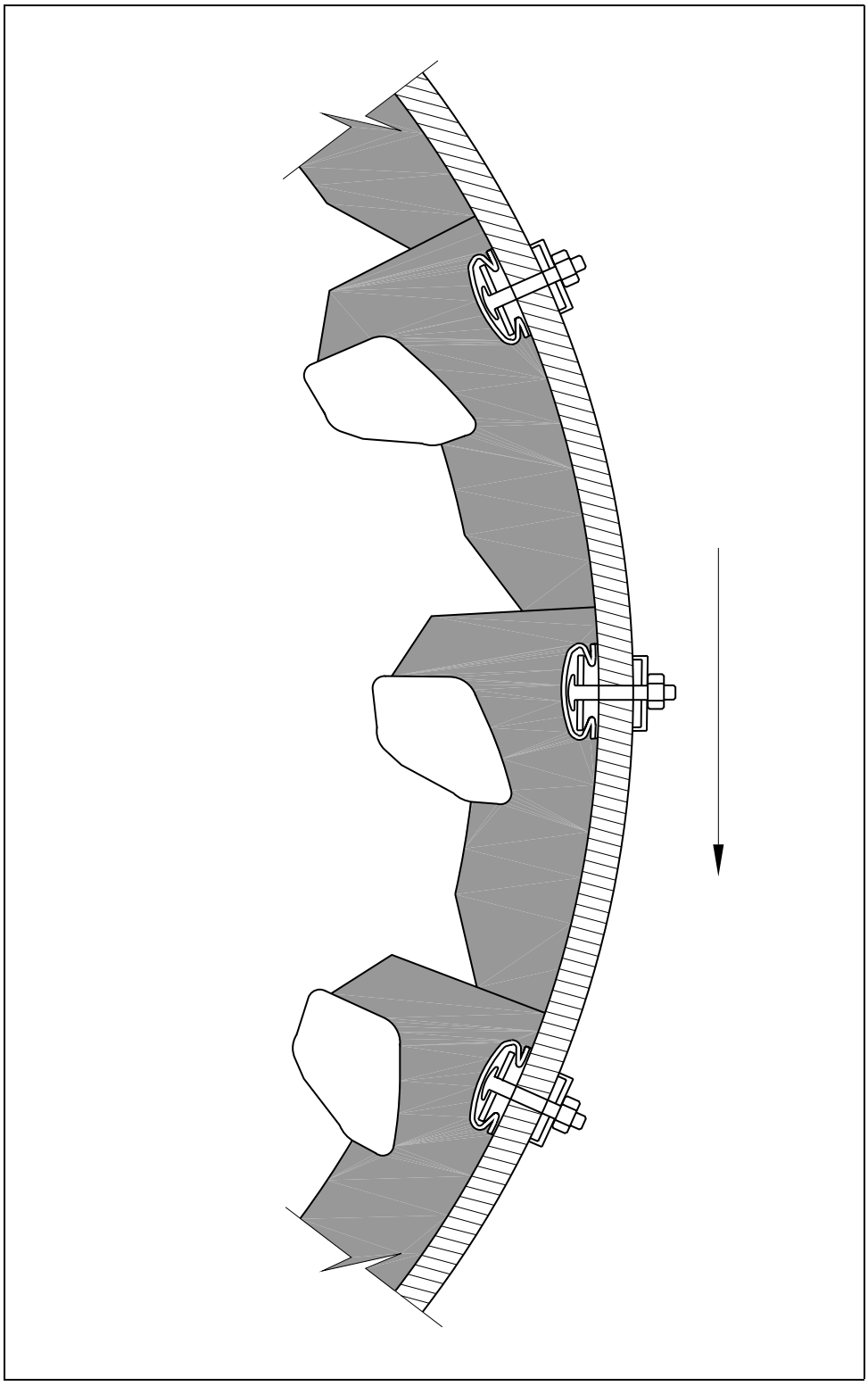

Figure 6-3
Cross-section View of a Poly-Met Lifter Bar

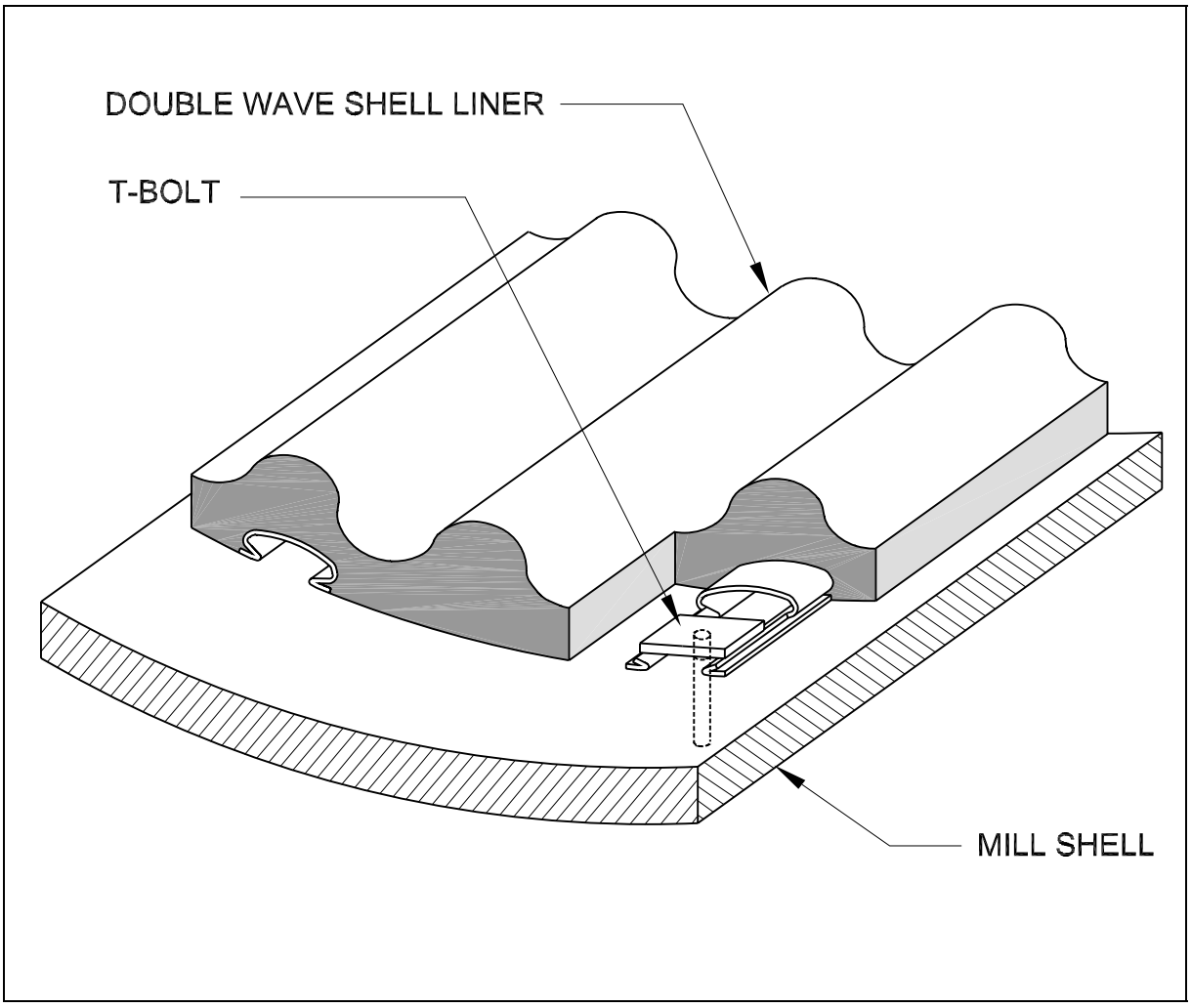

Figure 6-4
Cross-section View of a Double-Wave Shell Plate Liner

The type of lime slaker used is largely dependent on when the FGD system was built. Generally, detention or paste slakers were commonly used in wet lime FGD systems and some spray dryer FGD systems built in the 1970s and early 1980s. Ball mill slakers were first used in utility wet FGD service in the late 1970s, were installed on most of the utility spray dryer FGD systems built in the 1980s, and were subsequently installed on a number of magnesium-enhanced lime

FGD systems built in the late 1980s through mid-1990s. Vertical stirred mill slakers were installed at several co-generation plants equipped with spray dryer FGD systems in the early 1990s, and in the mid-1990s were installed on a new utility spray dryer FGD system and retrofit to two existing wet lime systems.

Of the systems that responded to the FGD maintenance ranking survey conducted as part of an earlier phase of the system, only three wet lime FGD systems and three spray dryer FGD systems provided maintenance labor and maintenance materials rankings. Of the wet FGD system respondents, one has detention slakers, one has paste slakers, and the third a ball mill slaker. Of the spray dryer FGD system respondents, one each has a detention slaker, ball mill slaker, and

vertical stirred mill slaker. All six respondents included slakers in their top-five maintenance labor and maintenance materials cost items.

Background

Each type of lime slaker provides a vessel for the reaction of an excess of water with lime (CaO) in an exothermic reaction that produces a slurry of slaked lime ($Ca(OH)_2$). The lime slaking reaction typically occurs at approximately 150°F to 200°F, with all of the heating from the ambient feed temperature provided by the heat of reaction. The product slurry typically contains 15 to 25 wt% solids, depending on the slaker type and lime reactivity. The lime slaking reaction is very rapid, and the reaction of pebble-size lime particles (e.g., minus ¾ inch) can produce a slurry of very fine slaked lime particles (typically less than 10-micron mass mean diameter).

A detention slaker is not much more than a stirred tank that provides residence time for the lime slaking reaction. The raw lime contains a certain percentage of "grits," or inert materials that do not participate in the hydration reaction. These grits must be removed from the slaker, typically by an inclined screw or traveling grate.

Paste slakers are similar to detention slakers, except the slaking reaction takes place at a lower ratio of excess water to lime than in a detention slaker (i.e., slaking at a paste consistency). While detention slakers typically use a propeller type agitator to mix the slurry in the slaking chamber, paste slakers use paddles on two parallel shafts to mix the paste-consistency slurry. Paste slakers use a "torque control valve" to regulate the amount of water makeup to the slaking chamber, to maintain that paste consistency. Downstream of the slaking chamber the slurry is diluted to promote the dropout of grits, which are removed by an inclined grate.

Horizontal ball mill slakers and vertical stirred mill slakers take advantage of grinding media to enhance the slaking reaction and ensure a very fine product slurry particle size. In these slaker types, the grits may be ground up and included with the product slurry rather than being removed.

Lime Slaker Maintenance Issues

The maintenance issues associated with lime slakers can vary with slaker type. However, many issues are related to the nature of the lime slaking reaction, and are common to all slaker types.

One FGD system that uses detention slakers reported initial problems with the grit removal system. They experienced numerous failures of the rake drives, which required slaker shut down and manual cleanout of the grits prior to repair. It appeared that the rake drive shafts and gears were undersized for this application. After the drives were replaced with heavier-duty parts, the incidents of slaker shut down due to grit removal problems have been greatly reduced (reportedly only one shut down in the past year).

An FGD system that uses paste slakers reported recently completing an expensive rebuild of two slakers, including a rebuild of the torque control valves. However, these slakers had been in service for over 20 years, so the need for a complete rebuild does not seem out of line. This same

FGD system replaced two other paste slakers with new detention slakers. One driver for replacing the paste slaker with detention slakers was to avoid an expensive rebuild. However, the biggest driver was to increase lime slaking capacity to support overscrubbing as a Clean Air Act Amendment compliance strategy. The paste slakers were limited in capacity to 8000 lb/hr of lime slaked.

An FGD system operator with ball mill slakers reported the service life of ball mill wear items – balls and rubber liners – to be quite acceptable. Shell plate liners and lifter bars reportedly last five to six years.

An FGD system that uses a vertical stirred mill slaker reported few specific problems related to the vertical stirred mill itself, but some plugging of slurry lines in the feed to the slaker and problems with an over-sized product slurry transfer pump.

A common maintenance issue for all of the slaker types is problems with the lime feed to the slakers. Because the lime slaking reaction is typically quite rapid, it can begin at soon as the pebble lime feed has any contact with water and/or water vapor.

Many slakers use weigh belt feeders to measure and control the feed rate of pebble lime to the slaker, and belt slippage and breakage is a common problem. This problem is apparently caused by the downstream lime slaking reaction, which produces hot water vapor that can back up into the weigh belt if not properly vented elsewhere. This in turn causes slaking reactions to begin on the belt, which can lead to elevated temperatures and solids buildups in the weigh belt.

One system uses rotary vane feeders to meter the flow of pebble lime to the slaker. They reported a problem with the vanes rubbing on the ends of the valve body, and causing the valve drive to trip on high torque. The solution to this problem appeared to be to shim the valve to provide more clearance against the valve body.

Ball mill slakers typically use a “dentist bowl” arrangement to introduce pebble lime and water to the mill. In the dentist bowl, the slaking water is added tangentially at high velocity. One FGD system operator reported continued problems with solids buildup and plugging at the dentist bowl. Their solution was to replace much of the hard piping around the dentist bowl with rubber hoses, that can be hammered to break up solids buildups, or quickly removed and cleaned or replaced as needed.

Vertical stirred mill slakers use a similar mixing bowl to combine the pebble lime and water before it enters the mill. One FGD system operator reported that their vertical stirred mill originally was plumbed so that the mixture entered near the top of the mill, but the vendor revised the piping so that the mixture is now added to a recycle tank. From the recycle tank it is pumped to the bottom of the mill (see Figure 6-5). With this change, the longer piping run from the mixing bowl to the recycle tank is prone to plugging, particularly during slaker start-up and during operation at low pebble lime feed rates. Their solution to this problem has been to increase the water-to-lime ratio during start up and/or to increase the slaker throughput to reduce the residence time of this reactive mixture in the piping. Also, the line from the recycle pump to the bottom of the mill has been more prone to erosion wear since moving the pebble lime addition point.

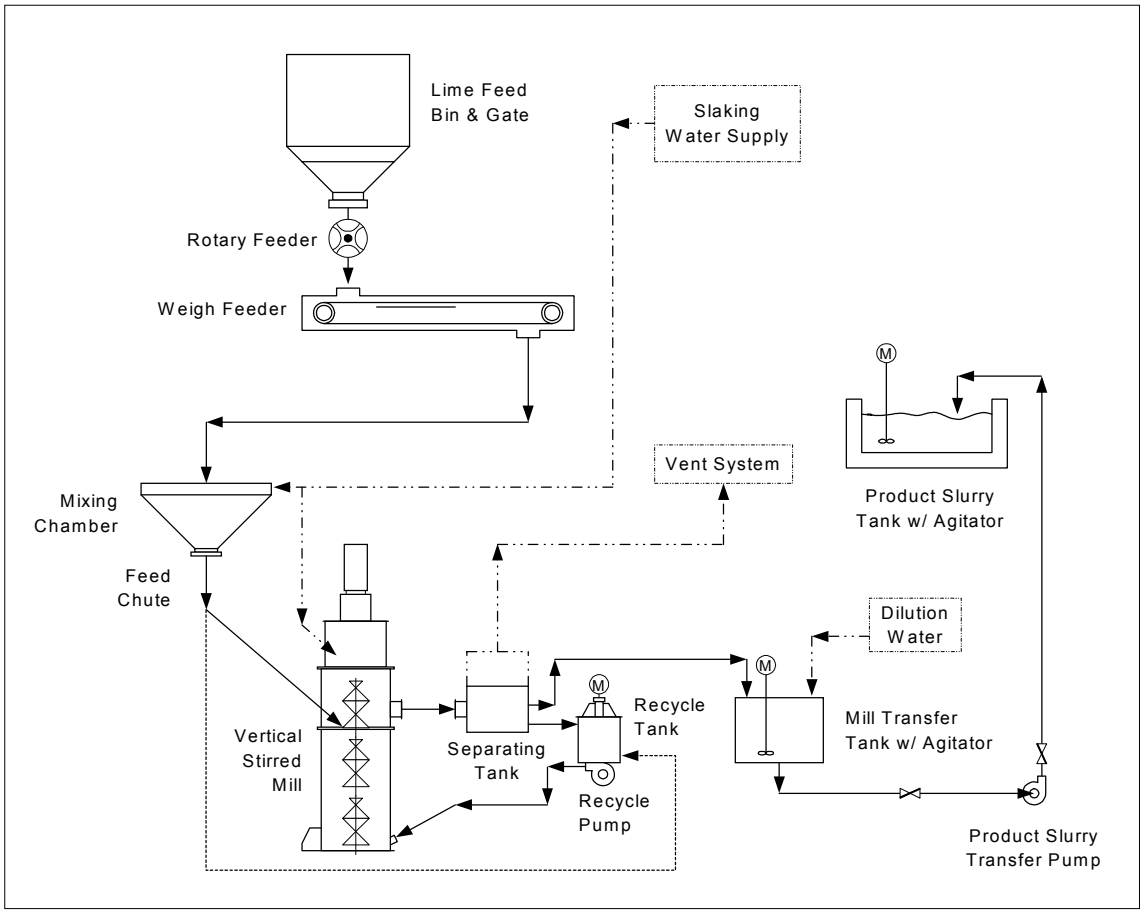

Figure 6-5
Simplified Flow Diagram for a Vertical Stirred Mill Lime Slaker

(Source: Svedala literature)

This same FGD system operator reports another problem related to the slaker product slurry transfer pump (again, see Figure 6-5). This centrifugal pump is somewhat oversized, and when the mill is operated at low pebble lime feed rates, the slurry splitter box and transfer tank can empty, causing the pump to become air locked. Once the pump becomes air locked, it does not self prime when slurry level is restored, leading to slurry overflows. Although no solution has been implemented, it appears that a level measurement and control system that would cycle the operation of the product slurry transfer pump could resolve this recurring problem.

This FGD system operator reports relatively few ongoing maintenance issues with the vertical stirred mill itself. They recommend inspecting the mill internals annually. Typical wear items include the flights on the vertical screw shaft, the vertical rubber wear bars that line the walls of the bottom portion of the mill, and the polymeric inserts that line the mill walls around nozzle penetrations. They have replaced the flights on one of two mills after six years of operation. The rubber wear bars and polymeric inserts are replaced more frequently. The utility also reported that during annual inspections they sometimes find the rubber coating on the vertical screw shaft delaminating, and have to send the shaft out to be relined. To reduce down time, they now have a spare screw shaft. Finally, they reported that over one operating period they let the flights at the

very bottom of the screw wear too extensively, which led to damage to the wear plate at the bottom of the mill. The damaged wear plate was replaced.

Summary

Horizontal ball mills have been used successfully for limestone grinding service for several decades. A number of utilities with limestone FGD systems ranked their horizontal ball mills as a top-five maintenance item. However, this ranking appears to be due primarily to routine replacement of known wear items.

As FGD systems become more reliable, and as systems operate in an "overscrubbing" mode for 1990 Clean Air Act amendment compliance, the limestone grinding system can begin to limit FGD availability. Many utilities are looking for evolutionary improvements in two ball mill reliability areas: lifter bar and shell liner wear, and limestone feed chute wear. Some utilities have begun to experiment with different lifter bars and shell liner designs that appear to offer longer operating life, but more experience is needed before success can be concluded. Similarly, a number of utilities are experimenting with mill feed chute materials improvements, but no universally successful solution has yet been identified. A weld repair with a hard chromium carbide surface appears to be the best solution identified during this project.

It is difficult to make summary observations about maintenance issues associated with lime slakers, for two reasons. One is that relatively few lime reagent FGD systems have participated in the data collection efforts associated with this project, which limits the amount of information collected. The other is that four significantly different lime slaker types are used in FGD service, including detention slakers, paste slakers, horizontal ball mills, and vertical stirred mills. The type of slaker used appears to be largely dependent on the age of the FGD system. Thus, maintenance issues have been determined for at most one or two FGD systems using each slaker type.

The most widespread maintenance issues for lime slakers appear to be plugging in the feed end and grit removal from the product end of the slakers. Solutions for plugging in the feed end are to ensure that hot water vapor evolved during the slaking reaction is effectively vented away from the dry pebble lime feed, to minimize piping runs between the slaker and the point where pebble lime and water are combined, and to use flexible piping rather than hard piping wherever possible, so that plugs can be readily cleaned out. The grit removal issues appear to be resolved by using heavier-duty components for drive components.

7
REACTION TANK AGITATOR MAINTENANCE ISSUES

Reaction tank agitators were listed as a top-five maintenance labor item for both medium- and low-sulfur-coal systems that responded to the FGD O&M cost survey conducted as part of this project, and were listed as a top-five maintenance materials cost item for low-sulfur-coal systems. Although agitators were not listed as a top-five maintenance item for the high-sulfur-coal FGD systems that responded to the survey, in the site visits conducted later in the project, a number of systems visited reported initial and/or ongoing maintenance issues related to reaction tank agitators.

This section describes the reaction tank agitator maintenance issues that were identified in the surveys and site visits, and efforts by FGD operators to improve agitator reliability.

Background

Reaction tank agitators in FGD service can either be in a top-mount or side-mount configuration. Top-mount agitators are typically used in earlier FGD systems where the FGD absorber is built separate from the reaction tank, and for the upper loop reaction tank in dual-loop systems. Side-mount agitators are typically used when the reaction tank is integral to the bottom of the absorber vessel, including the lower loop of dual-loop systems. Figures 7-1 and 7-2 illustrate top-mount and side-mount reaction tank agitator configurations.

In either configuration, the agitator consists of an electric motor, speed reduction unit, shaft, and impeller. For side-mount units, a shaft seal is also required, since the agitator is inserted through the reaction tank wall below the slurry level. Either packing gland or mechanical seals can be used in this service. Agitator vendors for FGD service commonly include Chemineer, Ekato, and Lightnin. From the survey information, it did not appear that any one vendor has gained predominance in the industry, nor does it appear that any one vendor's equipment is more maintenance-free than others. In some cases one FGD system reported initial or on-going problems with one vendor's agitator, while others reported good performance.

Maintenance issues reported for reaction tank agitators typically involve shaft failures, and impeller erosion and/or corrosion. For side-entry agitators, seal failures can also be a maintenance issue.

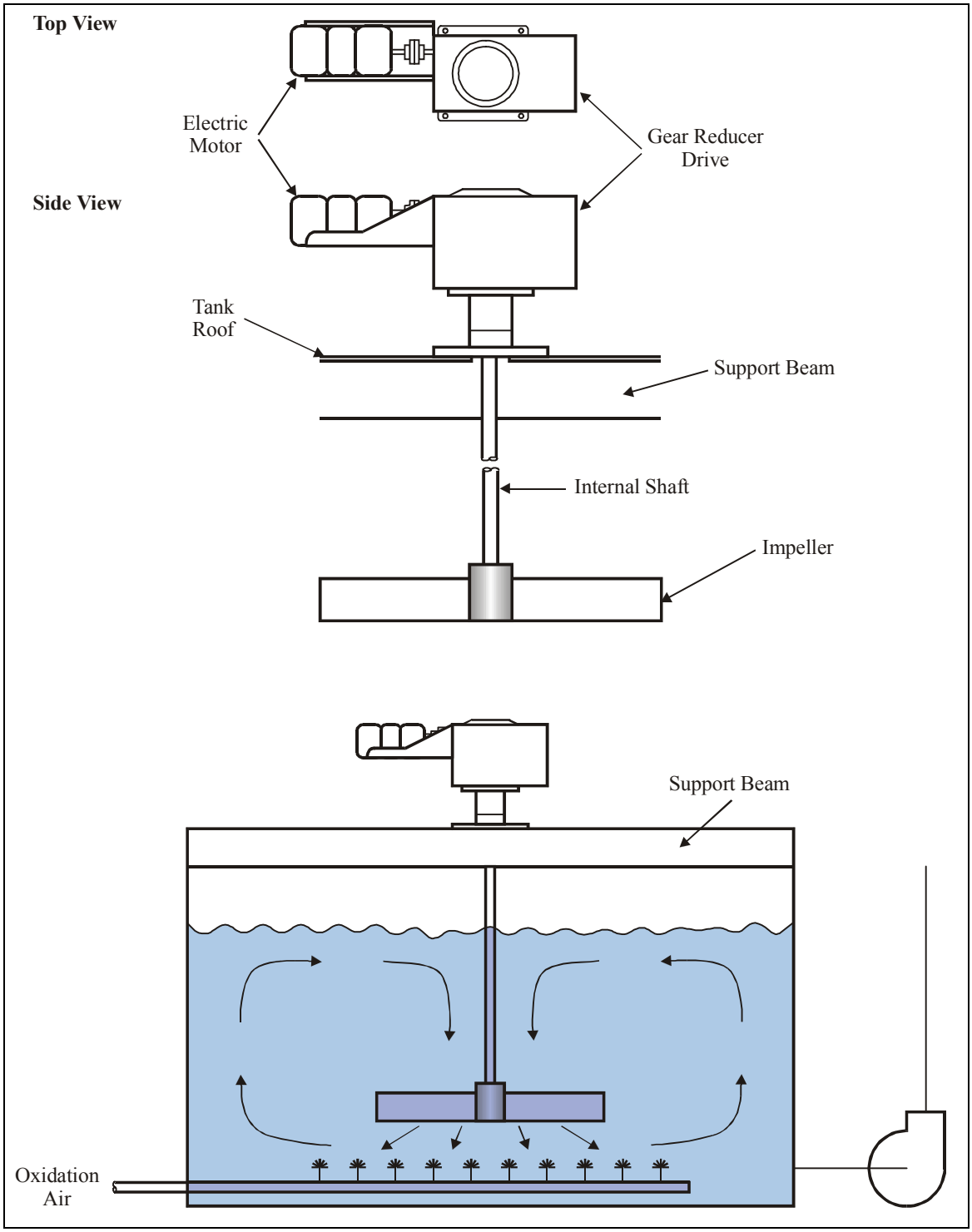

Figure 7-1
Top-entry Agitators

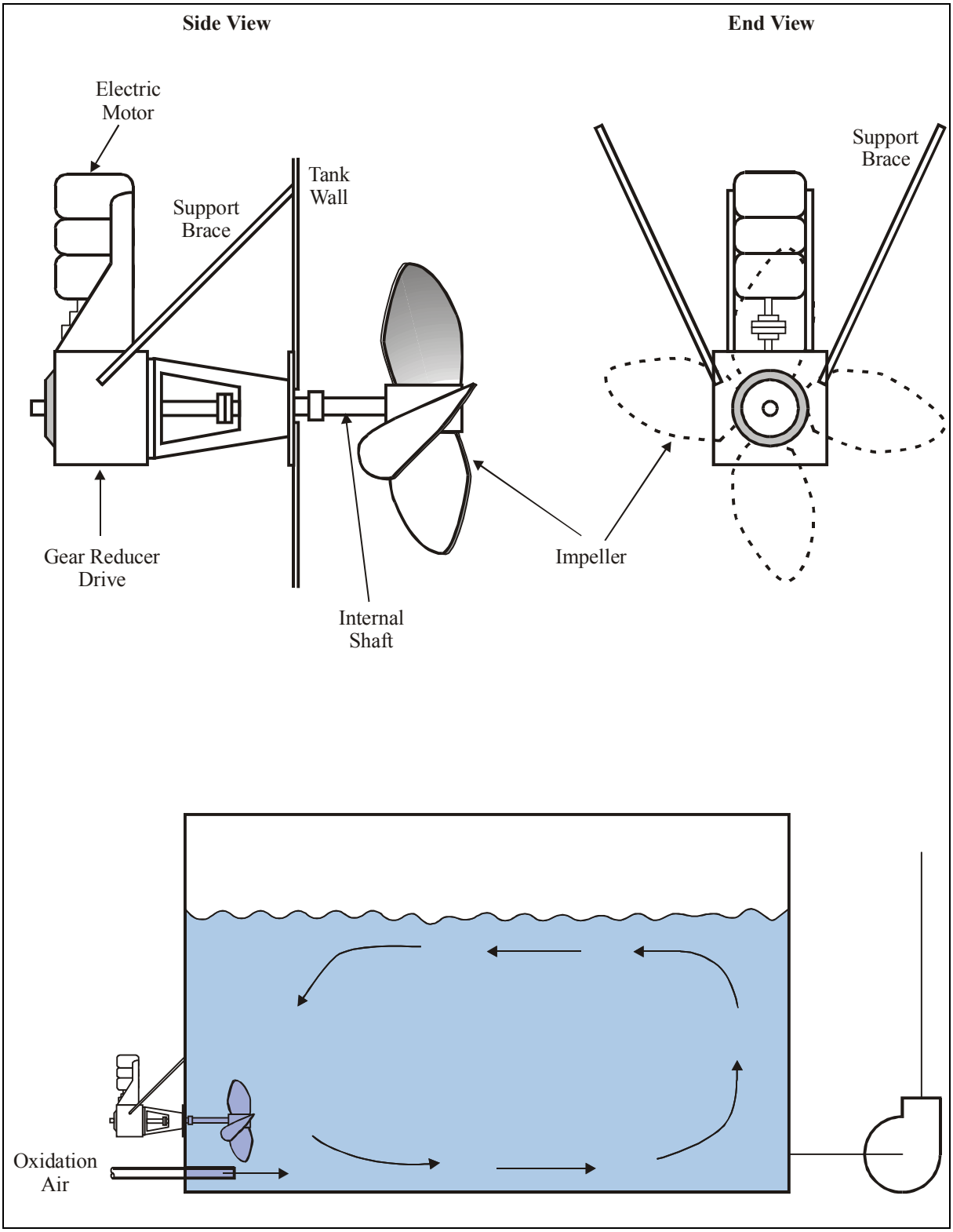

Figure 7-2
Side-entry Agitators

Agitator Shafts

The agitator shaft must maintain rigidity when acted upon by torsional and deflection loads. The shaft must also be designed to avoid the critical speed of the shaft and impeller combination. The critical speed is that where the rotational speed is equal to the natural lateral vibration frequency of the device [1]. As the critical speed is approached, large and violent oscillations can be experienced by the agitator shaft/impeller unit. A number of systems reported agitator shaft failure problems, but most appeared to be the result of initial design errors, or later modifications that inadvertently caused the agitator/shaft combination to operate near its critical speed.

In one system, a materials of construction change was made during the system FGD system design to change from a high-chrome alloy shaft to a solid C-276 shaft. This apparently placed the design near the critical speed of the shaft/impeller combination for the side-mount agitator, and led to a number of shaft failures. The agitator vendor resolved this problem by shortening the agitator shaft, presumable to change the critical speed away from the normal operating rpm. In another case, the FGD system operator tried a four-blade alloy impeller as a replacement for three-blade rubber-lined impellers that were experiencing rubber liner failures. This change apparently led to changing the critical speed of the shaft/impeller unit to near the operating rpm, as numerous agitator shaft failures were experienced. The FGD system operator reportedly switched back to a three-blade impeller design, and lowered the agitator rpm from 1800 to 1200 rpm to resolve the problem.

A third system experienced excessive shaft vibration and frequent shaft failure (as often as weekly) on one of three side-mount agitators on each reaction tank in the FGD system. This problem was traced to an incorrect rotation of direction for this agitator (two were supposed to rotate clockwise and one counterclockwise, but all three were operating clockwise). Once the direction of rotation was corrected, this problem went away.

In the earlier maintenance survey, two systems reported ongoing shaft problems. One reported frequent bending of shafts on side-mounted agitators, and another reported continuing failures of the shafts on top-mounted agitators. Two reasons for shaft failures on top-mounted agitators were identified in the surveys. One was a buildup of solids on the agitator blades, leading to imbalances, and the other was improper limits on tank levels that allowed the agitator to cavitate at low tank level. No other ongoing agitator shaft maintenance issues were identified in either the surveys or site visits.

Impellers

A number of impeller designs have been used in FGD service. Most have individual blades like the propellers on a boat, but some use a vaned wheel that is similar in appearance to a centrifugal pump impeller. Impeller designs can be for axial flow (slurry flow parallel to the agitator shaft), radial flow (slurry flow perpendicular to the shaft), or mixed flow. Rubber-lined steel has traditionally been the most common material of construction for reaction tank agitator impellers, but these are subject to failure of the rubber liner in the abrasive slurry service. A number of systems have replaced rubber-lined impellers with alloy pieces. Solid alloy impellers are becoming more commonplace. One system has reported good service over the past three years

from 254 SMO®[8]. and AL-6XN®[9] alloys (both are 6% molybdenum, high chromium, high nickel content stainless steels) used to replace rubber-lined impellers. A number of newer systems designed to operate at high dissolved chloride levels in their recycle slurry have installed solid C-276 alloy impellers. Many of these are "Phase 1" FGD retrofits that now have seen six years of operation.

The latter has led to a common maintenance issue: abrasion wear of C-276 impeller blades. While C-276 has outstanding corrosion resistance in an FGD environment, apparently the alloy does not have great erosion resistance. Several FGD systems with solid C-276 agitator impellers reported the need to weld-repair eroded blades on a regular basis (e.g., as often as every four months). One FGD operator appears to have found a solution to this erosion damage, though. They have had their impellers lined with a vacuum-bonded ceramic tile. The tile is light enough and thin enough that it does not adversely affect impeller balance or flow patterns. They occasionally lose a tile or two on an impeller, but these are readily replaced during outages.

One FGD system reports continued problems with impeller failures at the point where the blade attaches to the hub, apparently by fatigue cracking. They upgraded materials from 317LM to C-276. Although this improved impeller life slightly, failures continued to occur. They have since gone to a heavier hub design and gone back to the original 317LM material. Although this change has so far been successful, more time is needed to evaluate the effectiveness of this revision.

Shaft Seals

There was relatively little mention of agitator-shaft-seal maintenance issues for side-entry agitators, in either the O&M cost surveys or the FGD site visits. Both mechanical and packing seals are apparently being used with success. The decision to use mechanical versus packed seals is most likely driven by the FGD water balance. One operator of an 1980's-vintage FGD system reported that the agitator shaft speed had to be reduced from 1800 rpm to 1200 rpm to allow successful retrofit of mechanical seals.

Only two of the O&M cost surveys mentioned an on-going agitator shaft seal issue. One older system reported they were not able to convert to mechanical seals because of too much shaft deflection on their side-entry agitators. A second reported they were unable to repack side-entry shaft seals on line. Most modern designs allow shaft seals to be repaired or replaced while the reaction tank is full of slurry.

Summary

A number of utilities have reported reaction tank agitators as a top-five FGD maintenance item. This ranking appears to be due to one of three reasons. First there have been initial problems on startup of new FGD systems. Typical problems include errors in the direction the propeller

[8] 254 SMO® is a registered trademark of Avesta Sheffield AB.

[9] AL-6XN® is a registered trademark of Allegheny Ludlum Steel Corporation.

rotates and last-minute materials changes that caused the agitator and shaft assembly to operate near its critical speed. These problems have generally been resolved by the original equipment manufacturer under warranty. A second issue has been seen on older FGD systems, where the original agitators were continually problematic for a number of reasons. These have generally been resolved by replacement of the original agitators with newer designs. In general, as the agitator vendors have gained more experience with FGD applications, their designs have been applied with more success.

The third type of problem appears to be an ongoing materials-of-construction issue. A number of newer FGD systems have used solid, highly-corrosion-resistant alloys such as C-276 for impeller blade and shaft materials. Several of these systems have noted continual wear of blade surfaces, requiring regular weld repair of erosion damage. These problems appear to be caused by selecting the most corrosion-resistant alloy for the application, but not necessarily the most erosion resistant. One FGD system operator has resolved this problem by covering the agitator blade surfaces with vacuum-bonded ceramic tiles. Ultimately, this erosion problem might be resolved by replacing the C-276 alloy with an alternate alloy that compromises some corrosion resistance for improved erosion resistance. This is an area where collaborative research might be needed to identify the optimum alloy for high-chloride FGD applications.

Reference

1. Radian International LLC, *Electric Utility Engineer's FGD Manual*, U.S. Department of Energy, Pittsburgh Technology Center, Grant No. DE-FG22-94PC94256, Pittsburgh, PA, May 1996.

8
ROTARY ATOMIZER MAINTENANCE ISSUES

Introduction

This equipment is specific to spray dryer FGD systems. Spray dryer FGD systems use high-speed rotary atomizers or an array of dual-fluid nozzles to produce a finely atomized slurry of alkaline reagent (typically slaked lime), which contacts flue gas in an open vessel downstream of the plant air heater. The amount of water in the atomized slurry is controlled to avoid complete saturation of the flue gas, and the flue gas residence time in the spray dryer vessel is adequate to completely dry the slurry droplets. As the slurry droplets dry, they react with flue gas SO_2 to form calcium sulfate and sulfite salts. Downstream of the spray dryer vessel, the dried salts and excess lime are collected in a particulate control device, most often a fabric filter, where continued SO_2 removal reactions occur.

Of the sixteen operating spray dryer FGD systems installed on U.S. utility coal-fired units, fourteen use rotary atomizers rather than dual fluid nozzles. Similarly, four of the five spray dryer FGD systems that participated in the maintenance ranking surveys included in an early phase of this project employ rotary atomizers. Consequently, the focus of this discussion is on rotary atomizers rather than dual fluid nozzle arrays. It is worth mentioning that all four of these respondents listed rotary atomizers as their number one FGD maintenance labor and material issue.

Background

The rotary atomizer typically consists of an alloy wheel with an array of nozzle openings around its perimeter. Figure 8-1 illustrates a typical rotary atomizer wheel for spray dryer FGD service. The wheel spins at high rpm (approximately 8,000 to 12,000 rpm). Slurry is fed into the cavity of the wheel, and centrifugal and shear forces produce very small droplets (e.g., 50 micron Sauter mean diameter) as slurry exits the nozzles on the wheel perimeter.

The wheel is attached to a drive shaft that spins at the same speed as the wheel. Different manufacturers take differing approaches to driving the wheel at high rpm. Some employ a gearbox to increase the wheel speed from the speed of the electric drive motor, while others use a high-speed, direct-drive motor.

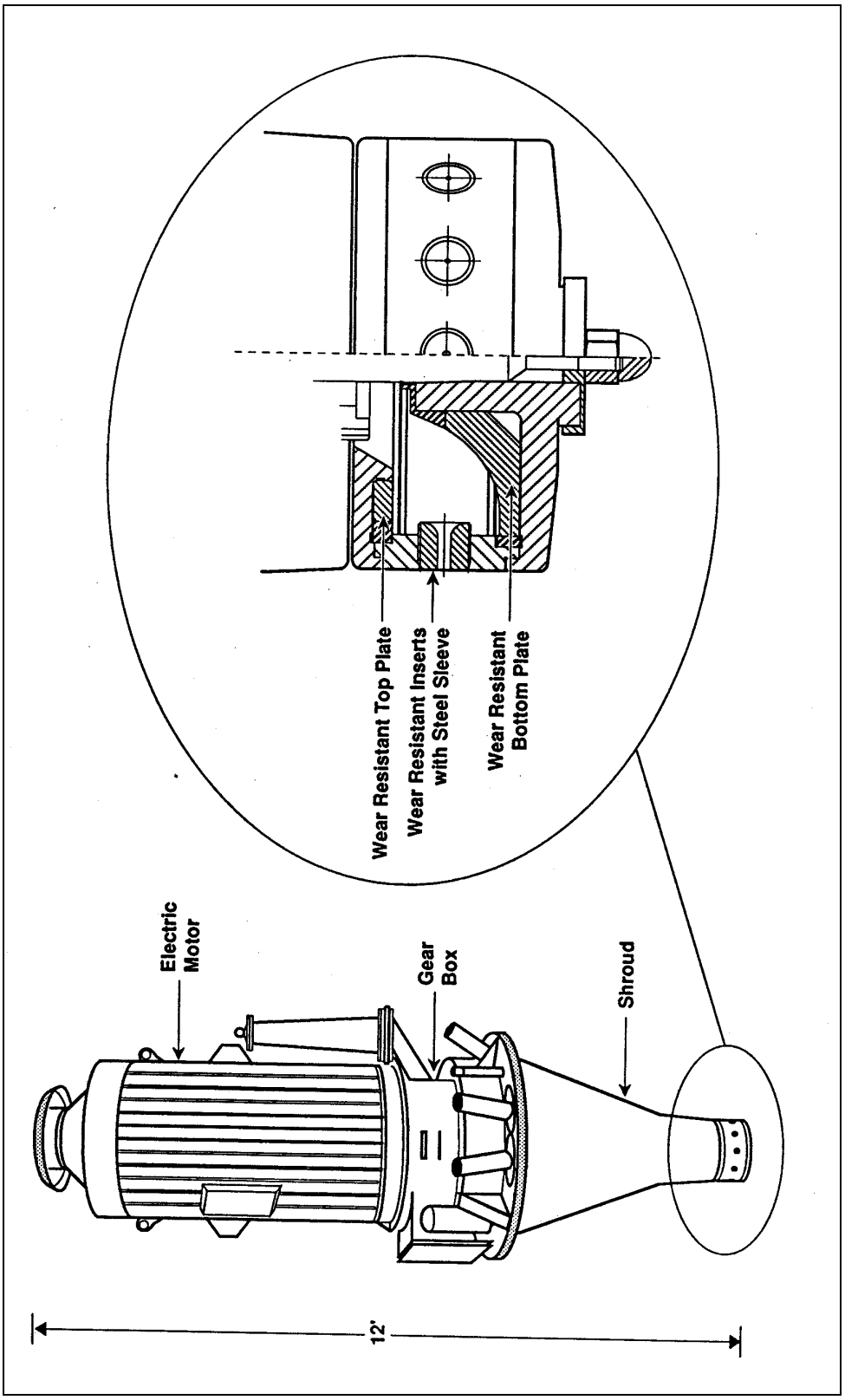

Figure 8-1
Rotary Atomizer Drive and Wheel Assembly

The slurry being atomized is typically abrasive. Some systems use slaked lime in a "once-through" feed system. However, many employ some form of recycle, where solids collected in the downstream particulate control device are re-slurried, and added to the atomizer feed with fresh lime slurry. The fresh lime slurry can contain abrasive grits, while the recycled material contains a significant proportion of fly ash. These grits and fly ash particles are very abrasive as they accelerate before they exit the wheel.

The atomizer wheels contain hardened inserts in high wear areas, such as on the inside "floor" of the wheel, and in the nozzle openings. Replacement of these wear inserts represents a significant ongoing maintenance labor and material cost for spray dryer FGD systems.

Rotary Atomizer Maintenance Issues

Atomizer Wheels

Rotary atomizer wheel maintenance is typically a significant maintenance labor and materials cost for spray dryer FGD systems. As mentioned above, the atomizer wheels contain hardened wear inserts at the nozzle openings, and in areas where slurry flows on the wheel, such as the floor of the wheel cavity. These must be replaced at regular intervals. One spray dryer FGD operator reported that each atomizer wheel must be serviced every 1200 to 1500 hours. At each service interval, the nozzles are typically rotated, as the wear is only in about a 90-degree arc of the nozzle circumference. Each nozzle can typically be rotated three times, to achieve a total operating life of about 4800 to 6000 hours.

Each time the wheel is serviced, the other wear parts are inspected and replaced as needed. The same spray dryer FGD operator mentioned above reported that wear plates on the atomizer wheels typically see about 5000 to 6000 hours of operation before replacement.

In some spray dryer FGD systems, a small portion of the slurry exiting the nozzles can recirculate back towards the wheel, and can lead to solids buildups and/or erosion on the external surfaces of the wheel. These buildups and/or erosion can occur on the bottom surface of the wheel, the top, or between nozzles on the perimeter. Some spray dryer FGD operators reported atomizer wheel erosion damage as part of normal operation, while others report erosion damage only when wear parts fail. At each atomizer wheel service, the wheel must be cleaned of deposits, and any parts that are significantly eroded must be replaced.

Spray dryer rotary atomizers are equipped with vibration monitoring devices that shut down power to the electric drive motor when vibration readings exceed a specified level. Solids buildups on a wheel can lead to atomizer "trips" due to high vibrations. When such trips are incurred, the atomizer must be removed from service, inspected, and cleaned or repaired as needed. This cleaning and inspection represents an ongoing maintenance labor expense. When wear parts must be replaced, a maintenance materials expense is also incurred.

The costs of nozzle inserts, wear plates, and replacement alloy wheel pieces represent a significant maintenance labor expense for spray dryer FGD systems equipped with rotary atomizers. A number of spray dryer FGD system operators have gone to aftermarket suppliers of

these parts to reduce costs. Several reported using parts supplied by RPM Solutions of Rapid City, South Dakota. Some spray dryer FGD operators report greatly improved wear characteristics in the aftermarket parts, relative to original equipment manufacturer (OEM) parts, while others feel that the main advantage of using aftermarket parts is the lower purchase price.

Atomizer Gearbox

Most spray dryer FGD systems with rotary atomizers use a gearbox to increase the wheel rotating speed above that of the drive motor. While the gearboxes are reportedly reliable, the cost of preventive maintenance according to OEM recommendations can be significant. One spray dryer FGD operator reported that the OEM recommends a major gearbox overhaul every 8000 hours. The parts associated with a major overhaul can reportedly total as much as $40,000 to $45,000 per machine. This FGD operator has extended the hours between major overhauls beyond the OEM recommendation in an effort to reduce costs. Gearbox overhaul parts are available from aftermarket sources as well as the OEMs, but none of the survey respondents commented about the relative cost or service life of aftermarket components.

Other Rotary Atomizer Maintenance Issues

Some spray dryer FGD designs feed slurry to the atomizer wheel from a “head tank” above the atomizer. The flow of slurry from the head tank to the wheel is controlled by a standard pinch valve. One spray dryer FGD operator reported wear and replacement of the elastomer sleeves in the pinch valves as a significant ongoing maintenance labor and materials cost issue.

Wet FGD experience has shown other valve types, that, while more expense in first cost, offer better service life in abrasive slurry throttling service (see Section 4). These other valve types include Clarkson Series C concentric pinch (or “muscle”) valves, and Fujiken ceramic ball valves. However, this spray dryer FGD operator has not experimented with other throttling valve types in this application.

Summary

The operators of spray dryer FGD systems that responded to the O&M cost survey rated rotary atomizers as a top maintenance labor and materials item in their FGD systems. However, the maintenance issues reported appear to, for the most part, reflect the “nature of the beast.” Replacement of wear parts on atomizer wheels, and routine gearbox overhauls represent significant, but not unexpected maintenance labor and materials expenses. Aftermarket suppliers have responded to the needs of these FGD system operators, providing parts that in some cases have a significant improved service life compared to OEM parts, and typically at a lower purchase price than the OEM parts. Also, system operators have extended routine preventive maintenance procedures beyond OEM recommended intervals in an attempt to reduce maintenance labor and materials expenses.

Target:
SO_2 and Non-Particulate Opacity Control

About EPRI

EPRI creates science and technology solutions for the global energy and energy services industry. U.S. electric utilities established the Electric Power Research Institute in 1973 as a nonprofit research consortium for the benefit of utility members, their customers, and society. Now known simply as EPRI, the company provides a wide range of innovative products and services to more than 1000 energy-related organizations in 40 countries. EPRI's multidisciplinary team of scientists and engineers draws on a worldwide network of technical and business expertise to help solve today's toughest energy and environmental problems.

EPRI. Electrify the World

© 2001 Electric Power Research Institute (EPRI), Inc. All rights reserved. Electric Power Research Institute and EPRI are registered service marks of the Electric Power Research Institute, Inc. EPRI. ELECTRIFY THE WORLD is a service mark of the Electric Power Research Institute, Inc.

Printed on recycled paper in the United States of America

1004025

EPRI • 3412 Hillview Avenue, Palo Alto, California 94304 • PO Box 10412, Palo Alto, California 94303 • USA
800.313.3774 • 650.855.2121 • askepri@epri.com • www.epri.com