EPRI

Inherently Reliable Boiler Component Design

Effective December 6, 2006, this report has been made publicly available in accordance with Section 734.3(b)(3) and published in accordance with Section 734.7 of the U.S. Export Administration Regulations. As a result of this publication, this report is subject to only copyright protection and does not require any license agreement from EPRI. This notice supersedes the export control restrictions and any proprietary licensed material notices embedded in the document prior to publication.



WARNING:
Please read the License Agreement on the back cover before removing the Wrapping Material.

Technical Report

Inherently Reliable Boiler Component Design

1004324

Final Report, March 2003

EPRI Project Manager
R. Tilley

EPRI • 3412 Hillview Avenue, Palo Alto, California 94304 • PO Box 10412, Palo Alto, California 94303 • USA
800.313.3774 • 650.855.2121 • askepri@epri.com • www.epri.com

DISCLAIMER OF WARRANTIES AND LIMITATION OF LIABILITIES

THIS DOCUMENT WAS PREPARED BY THE ORGANIZATION(S) NAMED BELOW AS AN ACCOUNT OF WORK SPONSORED OR COSPONSORED BY THE ELECTRIC POWER RESEARCH INSTITUTE, INC. (EPRI). NEITHER EPRI, ANY MEMBER OF EPRI, ANY COSPONSOR, THE ORGANIZATION(S) BELOW, NOR ANY PERSON ACTING ON BEHALF OF ANY OF THEM:

(A) MAKES ANY WARRANTY OR REPRESENTATION WHATSOEVER, EXPRESS OR IMPLIED, (I) WITH RESPECT TO THE USE OF ANY INFORMATION, APPARATUS, METHOD, PROCESS, OR SIMILAR ITEM DISCLOSED IN THIS DOCUMENT, INCLUDING MERCHANTABILITY AND FITNESS FOR A PARTICULAR PURPOSE, OR (II) THAT SUCH USE DOES NOT INFRINGE ON OR INTERFERE WITH PRIVATELY OWNED RIGHTS, INCLUDING ANY PARTY'S INTELLECTUAL PROPERTY, OR (III) THAT THIS DOCUMENT IS SUITABLE TO ANY PARTICULAR USER'S CIRCUMSTANCE; OR

(B) ASSUMES RESPONSIBILITY FOR ANY DAMAGES OR OTHER LIABILITY WHATSOEVER (INCLUDING ANY CONSEQUENTIAL DAMAGES, EVEN IF EPRI OR ANY EPRI REPRESENTATIVE HAS BEEN ADVISED OF THE POSSIBILITY OF SUCH DAMAGES) RESULTING FROM YOUR SELECTION OR USE OF THIS DOCUMENT OR ANY INFORMATION, APPARATUS, METHOD, PROCESS, OR SIMILAR ITEM DISCLOSED IN THIS DOCUMENT.

ORGANIZATION THAT PREPARED THIS DOCUMENT

FGS & Associates, LLC

ORDERING INFORMATION

Requests for copies of this report should be directed to EPRI Orders and Conferences, 1355 Willow Way, Suite 278, Concord, CA 94520, (800) 313-3774, press 2 or internally x5379, (925) 609-9169, (925) 609-1310 (fax).

Electric Power Research Institute and EPRI are registered service marks of the Electric Power Research Institute, Inc. EPRI. ELECTRIFY THE WORLD is a service mark of the Electric Power Research Institute, Inc.

Copyright © 2003 Electric Power Research Institute, Inc. All rights reserved.

CITATIONS

This report was prepared by

FGS & Associates, LLC
2301 Wagon Lane
Knoxville, TN 37920

Principal Investigator
P. Chang

This report describes research sponsored by EPRI.

The report is a corporate document that should be cited in the literature in the following manner:

Inherently Reliable Boiler Component Design, EPRI, Palo Alto, CA: 2003. 1004324.

REPORT SUMMARY

This report summarizes the lessons learned during the last decade in efforts to improve the reliability and availability of boilers used in the production of electricity. The information in this report can assist in component modifications and new boiler designs.

Background

Boiler-design technology has evolved rapidly over the last two decades. The growth in size, pressure, and temperature from this period has pushed the technology into regions never before explored. Until the 1960s, efforts to improve the design of pulverized coal-fired boiler systems emphasized the overall thermal-cycle efficiency. Since then, the emphasis has shifted to equipment reliability. Investigations of potential areas of improvement focused on the failure mechanisms of pressure components, analyses of the root causes of damage and failure, nondestructive examination techniques, methods for assessing the remaining life of boiler systems, and design modifications and upgrades. Over the last decade, the U.S. utility industry has invested a large amount of resources and effort in resolving problems related to the failure of boiler pressure components.

Objectives

- To investigate the failure mechanisms of critical pressure components in boiler systems, specifically tubing, headers, and steam piping
- To identify design changes that may reduce component damage rates in service and component operation and maintenance costs

Approach

This report describes an investigation into steam boilers, including unit operation, maintenance, cycle chemistry, and boiler-tube failures. The design and failure mechanisms of pressure components used in boiler systems were thoroughly investigated to determine how these components can be improved to extend component life, reduce maintenance, and enhance reliability.

Results

The reliability of pressure components in boilers starts with design. A quality design is inherent reliability. If the original design possesses errors or inadequacy or the fabrication/installation contains defects, the plant operation and maintenance will be seriously endangered. The design has its base assumptions, limitations, and constraints. An in-depth understanding of these constraints is required by the operating and maintenance personnel in order to preserve the reliability provided in the original design. Reliability assurance is system engineering, which should consider the complete line of process relationships (for example, system selection, design,

material, fabrication, installation, commissioning, operation, and maintenance). To achieve a high level of reliability in boiler pressure components, baseline defects must be minimized.

Today's utility companies must try to maximize the following multiple system objectives:

- Maintain capacity
- Improve efficiency
- Reduce emissions
- Preserve reliability and availability
- Ensure safety
- Minimize production cost

Some of these objectives conflict with each other. The ultimate goal is cost reduction and revenue increase within reliability, safety, and emission constraints. It is essential to understand the constraints and to develop an integrated strategy to optimize the system performance or to conduct economical tradeoffs within these multiple constraints.

Many techniques have been developed in the last decade for assessing the remaining life of boiler pressure components. These techniques include the use of EPRI-developed computer codes, such as TUBELIFE/TULIP, PODIS, and BLESS, to address problems of overheating, dissimilar metal welds, and header design, respectively.

EPRI Perspective

This work is part of an initiative in the Boiler Life and Availability Improvement Program to develop technology and tools to achieve safe and reliable operation of fossil power plants. As boiler components age and need to be replaced, the conventional approach has been to replace components "in kind"—the same design and materials of construction as the original component. Actual operating experience and more recent improvements in techniques for assessing component damage can provide opportunities to modify component designs to reduce the potential for damage occurring in service and to increase expected component life. Additionally, greater inherent resistance to damage can enable utilities to reduce operating and maintenance costs associated with key boiler components. This work provides a summary of damage mechanisms for boiler components and highlights opportunities to modify design features to reduce susceptibility to damage. This work will be expanded in ongoing work to more fully address utility opportunities to reduce long-term operation and maintenance costs by replacing original boiler components with new designs that offer inherently greater reliability.

Keywords

Boiler life and availability improvement
Fossil power plants
Operation and maintenance costs
Reliability

CONTENTS

***1* INTRODUCTION 1-1**

Background 1-1

Boiler Pressure Component Failure History 1-3

Boiler Pressure Component Failure Mechanisms 1-5

Creep 1-5

Fatigue 1-5

Erosion 1-6

Corrosion 1-6

Contents of the Report 1-8

***2* SYSTEM DESIGN CONSIDERATIONS 2-1**

Background 2-1

Boiler System Selection and Design 2-1

Boiler Cycle Selection 2-1

Furnace Size 2-2

Effect of Fuel Characteristics on Design 2-5

Moisture Content 2-6

Ash Content 2-6

Ash-Fusion Temperature 2-6

Slagging and Fouling 2-7

Slagging 2-7

Fouling 2-7

Circulation System 2-8

Convective Tubing Spacing 2-10

Cycle Chemistry 2-11

Boiler Water Treatment 2-11

Phosphate Treatments 2-12

Caustic Treatment 2-13

All-Volatile Treatment....2-14
Feedwater Treatment....2-14
Feedwater Treatment for All-Ferrous Feedwater Systems....2-14
Mixed Metallurgy Feedwater Systems....2-15
Environmental Considerations....2-15
Particulate Matter....2-16
Sulfur Oxides....2-16
Nitrogen Oxides....2-16
NO_x Formation Mechanism....2-17
Influence of Coal Properties on NO_x Control....2-17
NO_x Control....2-18
Combustion NO_x Control....2-18
Performance Design for Low NO_x....2-18
Low-NO_x Burners....2-19
Fuel Reburn....2-19
Post-Combustion NO_x Control Options....2-20
Selective Non-Catalytic Reduction....2-20
Selective Catalytic Reduction....2-20
Hybrid Systems....2-21
NO_x Technology Selection....2-22
Cycling Operation....2-22
Fireside Corrosion....2-23
Fireside Erosion....2-24
Generation of Corrosive and Erosive Species....2-24
Causes of Fly Ash Erosion....2-25
Fly Ash Properties....2-25
Control System....2-27

***3* DESIGN CONSIDERATIONS TO REDUCE BOILER TUBE FAILURES FROM MATERIAL AND FABRICATION FLAWS....3-1**
Material Selection....3-1
Material and Fabrication Flaws....3-7
Welding Defects....3-8
Flaw Prevention....3-12

4 DESIGN CONSIDERATIONS FOR WATERWALLS AND ECONOMIZERS....4-1
Waterwall....4-1
Local Thermal-Hydraulic Conditions....4-3
Design Considerations to Reduce Boiler Tube Failures for Water-Touched Tubes....4-4
Graphitization....4-4
Corrosion Fatigue....4-5
Stress Factor....4-9
Filler Bars....4-10
Scallop Bars (Long and Short)....4-12
Gusset Plates....4-15
Tangent Plates (Bars)....4-16
End of Membrane....4-19
Environment for Corrosion Fatigue Mechanism....4-19
Economizer....4-20
Waterwall Fireside Corrosion....4-22
Waterwall Fireside Corrosion Mechanisms....4-22
Molten Salt and Slag-Related Attack....4-22
Reducing Conditions....4-23
Waterwall Wastage in Low-NO_x Boilers....4-23
Waterwall Wastage Mechanisms....4-23
Laboratory Corrosion Studies....4-24
Cyclone Boilers....4-25
Combustion Modeling....4-26
Measures to Reduce Boiler Tube Failures Due to Waterwall Fireside Corrosion....4-26
Combustion Improvement....4-26
Material Solutions....4-27
Metal Spray (Metallizing)....4-27
Weld Overlays....4-28
Laser Cladding....4-29
Diffusion Coatings....4-29
Fly Ash Erosion on Waterwalls....4-30
Summary....4-30
Waterwall....4-30
Economizers....4-32

5 DESIGN CONSIDERATIONS FOR SUPERHEATERS AND REHEATERS 5-1
Basic Considerations for Superheaters and Reheaters 5-1
Superheaters/Reheaters Fireside Corrosion 5-3
Accelerated Oxidation From Overheating 5-4
Deposit-Related Molten Salt Attack 5-4
Measures to Reduce Superheater/Reheater Tube Failures From Fireside Corrosion 5-6
Fly Ash Erosion on Superheaters and Reheaters 5-7
Causes of Fly Ash Erosion on Slag Screen Tubes, Pendant Superheaters, and Reheaters 5-7
Causes of Fly Ash Erosion on Back Pass Tubes 5-8
Measures Against Fly Ash Erosion 5-9
Reduce the Bulk Gas Velocity 5-9
Reduce Localized Gas Velocity 5-9
Reduce Ash Loading 5-10
Eliminate Stratification 5-10
Decrease the Erosivity of the Fly Ash 5-10
Reheaters Out-of-Service Corrosion 5-11
Dissimilar Metal Welds in Superheater and Reheater Tubes 5-12
Tube Supports 5-14
Fluid-Cooled Spacers 5-15
Tube Ties 5-17
Using Life Assessment Techniques for Design Evaluation of Superheater/Reheater Tubes 5-18
Summary 5-19
Superheaters 5-19
Reheaters 5-21

6 HEADERS 6-1
Background 6-1
Economizer Inlet Headers 6-1
Steam Drums 6-2
Mud Drums 6-3
Lower Waterwall Headers 6-3
Primary Superheater Headers 6-3
Attemperators/Desuperheaters 6-4

Stresses in Headers 6-4
Discontinuity Stresses 6-4
Thermal Stresses 6-5
Openings 6-6
High-Temperature Header Damage Mechanisms 6-7
Repairable Header Damage 6-12
Non-Repairable Header Damage 6-13
ASME Header Design 6-14
Header Analysis by BLESS 6-14
Header Upgrades 6-16
Case Example 6-19
Units Description 6-19
Header History 6-19
Tube Stub Cracking 6-19
Header Shell and Borehole Cracking 6-20
Main Steam Outlet Tee Weld Cracking 6-20
Temperature Monitoring of the Header 6-21
Redesign Considerations 6-21
BLESS Code Analysis 6-21
Summary 6-22

7 PIPING SYSTEM 7-1
Background 7-1
Piping Damage Mechanisms 7-2
Longitudinally Seam-Welded Steam Pipes 7-3
Failure Mechanisms for Longitudinally Seam-Welded Steam Pipes 7-3
EPRI Guidelines for the Evaluation of Seam-Welded High-Energy Piping 7-5
Metallurgical Observations 7-8
Effect of Metallurgical Variables 7-9
Pre-Existing Defects 7-9
Weld Inclusions and Composition 7-9
Heat Treatment 7-10
Material Chemical Composition 7-11
Weld Geometry 7-11
Effect of Pipe Configuration and System Loads 7-12

EPRI Guidelines Summary 7-13
Discussions 7-16

8 **SUMMARY 8-1**

9 **REFERENCES 9-1**

A **USING LIFE ASSESSMENT TECHNIQUES TO PERFORM DESIGN EVALUATION A-1**
Introduction A-1
ASME Boiler and Pressure Code Section I Design A-1
Background A-1
Design Methods A-3
Design Limitations A-4
Probabilistic Analysis for Remaining Life Assessment A-5
Using Life Assessment Techniques to Perform Design Evaluation of SH/RH Tubes A-6
Background A-6
Oxide Scale Growth Laws A-7
Choice of Fireside Corrosion Rate Law A-9
Choice of Stress Rupture Curve and Stress Formula A-10
In-Service Degradation A-10
Validity of the Life Fraction Rule A-12
TUBELIFE III A-13
General A-13
Low-Temperature and Low-Oxide Thickness Limitations A-16
Stainless Steel Application A-16
Tube Life Probability (TULIP) Software A-16
Using TUBELIFE III and TULIP as a Design Tool A-18
High-Temperature Headers A-18
Background A-18
Header Damage Considerations A-18
Ligament Cracking A-18
Weldment Cracking A-19
BLESS Modeling Considerations A-20
BLESS Computer Code A-21
BLESS-Headers 4.2 ..... A-22

Using BLESS-Headers 4.2 as a Design Tool A-24
BLESS-Pipes 4.2 ..... A-25
Using BLESS-Pipes 4.2 as a Design Tool A-26
BLESS-LBB 4.1 ..... A-27
Dissimilar-Metal Welds A-28
Background A-28
PODIS: Prediction Damage In Service for Dissimilar Metal Welds A-29
PODIS Sample Case A-32
Using PODIS as a Design Tool A-37

_B_ DEVELOPMENT OF TECHNICAL SPECIFICATION FOR PROCUREMENT B-1
Introduction B-1
Codes and Standards B-2
ASME Boiler and Pressure Code Section I B-3
General B-3
Effective Code Issue B-3
Organization of the Written Code B-3
Materials B-4
Hydrostatic Testing B-4
Welding B-4
Quality Control B-5
Manufacturer's Data Reports B-5
Contract Administration B-5
Quality Assurance and Quality Control for Fabrication B-7
Tube Materials B-9
Tube Manufacturing B-9
Seamless Tubes B-9
Electric Resistance Welded Tubes B-12
Quality and Metallurgical Control of Tube Materials B-12
General Fabrication Requirements B-13
Tube Bending B-13
Specific Requirements for Low-Alloy Steel B-15
Specific Requirements for Austenitic Stainless Steel B-15
Quality Assurance in Bending and Panel Fabrication B-16
Welding B-16

Welding Procedures B-16
Welder Qualification B-18
Welding Filler Materials B-19
Attachment Weld Material Selection B-20
Joint Design and Preparation B-21
Preheat and Interpass Temperature B-22
Post-Weld Heat Treatment B-22
Heat Treatment B-23
Nondestructive Examination B-23
Ultrasonic Inspection of Raw Tube Material B-25
Visual Examination B-26
Radiographic Examination B-26
Hydrostatic Testing B-28
Special Requirements for Headers B-28
Dimensional Measurement B-29
Packaging and Shipping B-34
Stainless Steel Contamination Prevention B-35
Documents Submittal and Review B-36
Source Inspections for Boiler Tube Components B-38
Constructability Review B-40

LIST OF FIGURES

Figure 2-1 Relative Size of Furnace Wall Systems for Different Fuels 2-3
Figure 2-2 The Effect of Coal Rank on Furnace Sizing 2-5
Figure 4-1 Schematic of a Typical Temperature Profile Through a Waterwall Tube 4-2
Figure 4-2 Typical Corrosion Fatigue Tube Failure Locations (Tangentially Fired Radiant Boiler) 4-5
Figure 4-3 Typical Corrosion Fatigue Tube Failure Locations (Front/Rear Fired Radiant Boiler) 4-6
Figure 4-4 Filler Bar Attachments and Potential Actions to Relieve Stress 4-11
Figure 4-5 Long Scallop Plate (Bar) Attachments and Potential Actions to Relieve Stress 4-13
Figure 4-6 Short Scallop Plate (Bar) Attachments 4-14
Figure 4-7 Gusset Plate Arrangements and Potential Actions to Relieve Stress 4-15
Figure 4-8 Tangent Plate Arrangements and Potential Action to Relieve Stress 4-17
Figure 4-9 Use of Rods to Seal Furnace at the Center Wall (Division Wall) Penetration of the Lower Slope Wall 4-18
Figure 5-1 Effect of Metal Temperature on Corrosion Rate 5-5
Figure 5-2 Improved Drainability Design for Horizontal Reheater 5-12
Figure 5-3 Old Support Arrangement of Steam-Cooled Spacer Tube 5-16
Figure 5-4 Modified Support Arrangement of Fluid-Cooled Spacer Tube 5-16
Figure 5-5 Tube Ties Arrangements 5-17
Figure 5-6 Modified Tube Tie Attachments 5-18
Figure 6-1 Discontinuity Forces at a Head-Cylinder Junction Under Internal Pressure 6-5
Figure 6-2 Header Locations Susceptible to Cracking 6-8
Figure 6-3 Forged Outlet Nozzle Replaces Tee Section Weld 6-17
Figure 6-4 Increased Ligament Size for Increased Life 6-17
Figure 6-5 Original (Left) and Modified Tube Stub Welds 6-18
Figure 6-6 Retrofitted Thermal Sleeve Reduces Stress 6-18
Figure 7-1 Schematic That Shows Primary Cracking/Damage Locations Observed in High-Energy Piping Seam Weldments 7-4
Figure 7-2 Schematic Illustrating the Evaluation of Creep Damage in Case of Double-V Seam-Weld HRH Piping 7-5
Figure 7-3 Finite Element Analysis-Based Prediction of the Stress Intensification at the Cusp Due to Weld/Base Metal Creep Rate Mismatch R 7-12
Figure A-1 Temperature-Time History Plot of Normal Operating Condition A-34

Figure A-2 Temperature-Time History Plot of Warm Start Condition A-35
Figure B-1 Welded Tube Panel Dimensional Tolerances B-31
Figure B-2 Loose Tube Panel Dimensional Tolerances B-32
Figure B-3 Welded Element Dimensional Tolerances B-33

LIST OF TABLES

Table 1-1 Boiler Tube Failure Influence Factors 1-6
Table 1-2 Relationship Between EPRI Boiler Tube Failure Mechanisms and Major Influence Factors 1-7
Table 2-1 Convective Pass Tube Spacing 2-11
Table 2-2 Predicted Erosion Based on Coal Erosiveness Factor Values 2-27
Table 3-1 Summary of Typical Boiler Tube Materials of Construction 3-3
Table 3-2 Minimum Tensile and Yield Strengths 3-4
Table 3-3 Maximum Tube Metal Temperatures 3-6
Table 3-4 Common Weld Defects 3-9
Table 3-5 General Considerations to Address Material and Welding Flaws 3-13
Table 4-1 Local Tube Conditions Lead to Initial Deposits 4-3
Table 4-2 Failure Site Listing With Descriptions, Stress Ranking, and Potential Modifications 4-6
Table 4-3 Design Enhancements to Improve Waterwall Tube Failures 4-31
Table 4-4 Design Enhancements to Improve Economizer Tube Failures 4-33
Table 5-1 Three-Category Ranking of the Corrosiveness of Coals for Water-Soluble Na + K 5-6
Table 5-2 Design Enhancements to Improve Superheater Tube Failures 5-20
Table 5-3 Design Enhancements to Improve Reheater Tube Failures 5-21
Table 6-1 High-Temperature Header Potential Damage/Failure Locations and Mechanisms 6-10
Table 6-2 BLESS Code Analysis Results 6-22
Table 6-3 Design Enhancements to Improve High-Temperature Header Reliability 6-23
Table 7-1 Damage Mechanisms and Locations for Piping System Components 7-3
Table 7-2 Comparison of EPRI and ASME Section V Ultrasonic Examination Requirements for Ferritic Pipe Welds 7-7
Table A-1 Design Safety Factors for Primary Membrane Stress A-2
Table A-2 Expressions for Oxide-Growth Kinetics in Cr-Mo Steels A-8
Table A-3 General Forms of the Oxide Correlations for Cr-Mo Steels A-8
Table A-4 Materials Included in TUBELIFE III A-13
Table A-5 Damage Index A-24
Table A-6 Input Data and Results for the Sample Problem A-36
Table B-1 Comparison of Cold Draw, Hot Finished, and “Super” Hot Finished Tubing B-11

Table B-2 Quality Assurance During Tube Manufacture..... B-13
Table B-3 Quality Assurance During Bending and Panel Fabrication..... B-16
Table B-4 Standard Welding Processes..... B-17
Table B-5 Welding Filler Materials..... B-19
Table B-6 Weld Filler Material Group I Attachments..... B-20
Table B-7 Weld Filler Material Group II Attachments..... B-21
Table B-8 Weld Filler Material Group III Attachments..... B-21
Table B-9 Recommended Heat Treatment for Stainless Steel Materials..... B-23
Table B-10 NDE of Shop-Fabricated Components..... B-24
Table B-11 Maximum Allowable Reinforcement in Tube Butt Joints..... B-26
Table B-12 Comparison of Film and Real-Time Radiography Techniques..... B-27
Table B-13 Dimensional Tolerances..... B-34
Table B-14 Water Quality..... B-35
Table B-15 List of Documents to Be Submitted with the Proposal..... B-37
Table B-16 Documentation Submittal Schedule..... B-38

1
INTRODUCTION

Background

The restructuring of the utility industry has been creating major changes in how generating units are operated and maintained. With the anticipated competition in the deregulated marketplace, utilities have to reduce production cost. Evolving emission regulations have placed more financial and operational burdens on these same fossil power plants. In today's environment, systems and equipment are required to perform at levels not thought possible a decade ago. Today's utility companies must try to maximize the following multiple system objectives:

- Maintain capacity
- Improve efficiency
- Reduce emissions
- Preserve reliability and availability
- Ensure safety
- Minimize production cost

Some of these objectives conflict with each other. The ultimate goal is cost reduction and increased revenue within the reliability, safety, and emission constraints. It is essential to understand the constraints and to develop an integrated strategy to optimize system performance or to conduct economical tradeoffs within these multiple constraints.

Boiler design technology evolved rapidly in the last two decades. The growth in size, pressure, and temperature from this period has pushed technology into regions never before explored. The overall thermal-cycle efficiency of pulverized coal-fired systems continuously improved in the United States until the 1960s. Since then, a distinct trend has been to emphasize equipment reliability. In the last decade, large amounts of resources and effort have been engaged in resolving boiler pressure component failure problems. The historical availability of the power plant to generate electricity in the United States in the 1960s indicates that the drum-type boiler has a higher reliability than the once-through subcritical and supercritical boilers. There are many factors that contribute to the poor performance of the once-through units. Among these factors are rapid increases in the unit size, new complex control systems, inadequate operator experience and training, and minimum incentives to design reliability into the plant. The reliability of these same large supercritical units has improved substantially in recent years through component upgrades and operation/maintenance improvements.

Since the 1970s, the utility market for new fossil units has basically stalled. Development of boiler technologies has focused on assessing and evaluating existing boiler components for improvements in reliability and availability. The technology involves detailed investigation of boiler pressure component failure mechanisms, root-cause analyses of damage and failure, nondestructive examination techniques, methods for assessing remaining life, and design modifications/upgrades [1,2].

The U.S. utility industry has not built many new large coal-fired units in the last decade. Instead, the combustion turbine and combined-cycle have been the units of choice in the past ten years. The uncertainty in natural gas supply and price are major concerns. The recent California energy crisis has promoted the potential for installation of new coal-fired units. The U.S. Department of Energy (DOE) has sponsored an Advanced Coal-Fired Low-Emission Boiler Systems (LEBS) development program [3]. The LEBS program includes three systems (wall-fired, tangentially fired, and arch-fired) that integrate advanced technologies to produce power with low emissions, high efficiency, reduced waste, and improved ash disposability. It is important that the lessons learned about unit operation, maintenance, cycle chemistry, and boiler-tube failures should not be forgotten when designing the new units.

Preserving the reliability of the boiler pressure components starts with design. A quality design is inherently reliable. If the original design posseses errors or inadequacy or the fabrication/installation contains defects, the plant operation and maintenance will be seriously endangered. Design for reliability or reliability-engineering approaches have been used in many industries with success. However, the design has its base assumptions and limitations. An in-depth understanding of these constraints is required by the operating and maintenance personnel to preserve the reliability provided in the original design. In other words, the critical design parameters, uncertainties, assumptions, limitations, constraints, margins of safety, and other important design information must be explained to the operation and maintenance personnel. One way to achieve this purpose is to have operation and maintenance personnel participate in the important design decisions in the early design stages. Reliability assurance is system engineering, which should consider the complete line of process relationships, such as system selection, design, material, fabrication, installation, commissioning, operation, and maintenance. To achieve a high level of reliability in boiler pressure components, baseline defects must be minimized.

This report summarizes the lessons learned in the last decade on activities to improve boiler reliability/availability and provides valuable information that should be considered in component modifications and new boiler designs. Initial investment can influence design decisions. However, life-cycle cost should be the focus of the economic consideration.

This report covers three critical boiler pressure components:

- Tubing
- Headers
- Steam piping

Boiler design is a complex problem that, in general, includes the following:

- Boiler-system selection. This includes the decision on thermal cycles (subcritical drum or once-through, supercritical), design temperature and pressure, firing system (wall-fired or tangentially fired), and others.
- Furnace type and dimension. These will be based on the fuels to be fired in the furnace. Other major considerations include slagging and fouling, combustion, emissions, furnace release rate based on plan and volumetric areas, and flue-gas temperature distribution differential in the horizontal plan.
- Thermal-hydraulic analysis. This includes selecting natural circulation or control circulation, pressure drop, departure from nucleate boiling (DNB) protection, circuitry arrangement, and determining the tube sizes.
- Heat transfer analysis. This includes determining the metal outside diameter (OD) and midwall temperature for material selection and calculating the tube-wall thickness based on the American Society of Mechanical Engineers (ASME) code formula. The thermal parameters used in the analysis are based on the experience and database of the boiler manufacturers.
- Mechanical design. This includes the attachment and support system and nonpressure parts (that is, casing, seals, buckstay, ductwork, and others).

The overall design of boilers is beyond the scope of this report because of the complexity, variety, and depth of system and engineering knowledge. Two comprehensive reference books that can be consulted for such information are *Steam: Its Generation and Use* [4] and *Combustion Fossil Power: A Reference Rook on Fuel Burning and Steam Generation* [5]. Boiler design is the sole responsibility of the boiler manufacturers. This report does not intend to challenge the boiler designers' experience and knowledge. It simply provides some valuable information for their consideration.

Boiler Pressure Component Failure History

One of the most complex, critical, and vulnerable systems in fossil power generation plants is the system of boiler pressure components. Boiler pressure component failures have historically contributed to the highest percentage of lost availability. Failures have been related to poor original design, fabrication practices, fuel changes, operation, maintenance, and cycle chemistry. On the other end, some tubes do last over the design life without failures. There are various databases that document the historical data. These sources of data can be separated into three categories:

- Industry-wide data are available through the North American Electric Reliability Counsel (NERC) [6,7]. Included in the NERC database are data from the Edison Electric Institute (EEI). The information obtainable from NERC concerns the cause and duration of forced outages. These data are helpful in identifying those areas of a boiler that are most prone to failure and the outage times associated with such failures.

- Utility records should also be reviewed to identify unit-specific problems or common problems within the utility units. These records include:
  - Operating records including water chemistry
  - Generating availability records
  - Plant performance history
  - Equipment failure and analysis records
  - Plant outage records
  - Maintenance and repair records
  - Boiler-inspection and condition-assessment records
  - Plant staff interviews
- The original equipment manufacturer (OEM) is another source of information. A search of the OEM's files may show documentation of past common problems for similar units and design [8].

Boiler pressure component failures have contributed greatly to unavailability in the past. A review of the failure history and problem areas indicates that some of the reasons for the high unavailability involve:

- Treatment of symptoms. The underlying causes of failures that produce forced outages may not be identified. When failures do occur, it is most important that they be accurately and completely documented in order to prevent or minimize their recurrence. In some instances, no systematic approach of failure mechanism and root cause analysis is employed. In other instances, the analysis system is used incorrectly and produces inaccurate results.
- Poor water quality. Poor feedwater quality is often quoted as the major contributing factor of boiler-tube failures in water-touched circuitries. With increases in operating pressure, feedwater quality becomes even more critical.
- Design enhancement and material selection. The susceptibility of superheaters and reheaters to premature tube failures has been reduced significantly from 1965 to 1977. This can be attributed to more sophisticated design procedures and conservative material selections. In the late 1960s, an extensive field-test program was initiated to broaden the database on coal-fired units. These data provided the basis for upgrading performance-prediction tools to deal with their current design deficiencies and set the foundations for handling new unit designs. The results of this program proved to be successful as indicated by the absence of recent field modifications. Field-testing of this type, including waterwall heat absorption data, continues as part of the program to update design and performance standards. Starting in 1969, the field-testing programs were broadened to include establishing unit performance regarding nitrogen oxides (NO_x). This was necessitated due to regulations enacted by both federal and state agencies on allowable emissions of pollutants.
- Coal quality. Using a different type of coal for emission or economic reasons has adversely affected the capability, operability, and reliability of boiler and boiler auxiliaries.

- Cycling operation. Many base-load-designed boilers have been placed into cycling duty, which has a major impact on the boiler reliability as indicated by occurrences of serious corrosion fatigue in water-touched circuitries, economizer inlet header shocking, thick-wall header damages, and others.
- NO_X emission. Deep staging combustion for NO_X reduction has produced serious waterwall fire corrosion for high sulfur-coal firing, especially in supercritical units.
- Aging. A large percentage of existing fossil-fired units are exceeding "design life" without plans for retirement. These vintage units are carrying major loads in power generation. With the economic incentive of cost reduction, the reliability of the boiler is difficult to maintain.
- Casing and ductwork leaks. Casing and ductwork leaks have been a source of lost availability, particularly on pressurized coal-fired units. Therefore, the industry has made an almost unanimous decision for balanced draft operation on later units.

Boiler Pressure Component Failure Mechanisms

Particular components manifest damage in unique ways [9–11]. The boiler tubes are under high-pressure and/or high-temperature conditions, and they are subject to potential degradation by a variety of mechanical and thermal stresses and environmental attack on both the fluid and fireside. Mechanical components can fail due to creep, fatigue, erosion, and corrosion.

Creep

Creep is a time-dependent deformation that takes place at elevated temperature under mechanical stresses. The creep strain involves three stages designated as primary, secondary, and tertiary. Each stage may be characterized in terms of creep rate. Other temperature-related material failures in the boiler tubes include graphitization and low-temperature creep cracking. Stress rupture can also occur, which involves overheating or overstressing the tube material beyond its capabilities for either a short-term or a long-term period.

Fatigue

Fatigue is a phenomenon of damage accumulation caused by cyclic or fluctuating stresses, which are caused by mechanical loads, flow-induced vibration, or thermal ratcheting. Fatigue is manifested as the initiation and stable propagation of a crack. A fracture failure occurs when a critical crack size is reached. Fatigue depends on the frequency and magnitude of the stress cycles. Stress cycling may be induced mechanically or thermally. The fatigue normally occurs at the high local stress and stress concentration areas such as header ligaments, welded attachments, tube stub welds, circumferential external surface cracking of waterwall tubes in supercritical units, and fabrication notches.

Erosion

Erosion is metal removal caused by particles striking the metal's surface. Various mechanisms, such as fly ash erosion, sootblowing erosion, falling slag erosion, and coal particle erosion can cause erosion on the boiler tubes. Fly ash erosion, which is a significant boiler tube failure concern, occurs in the regions with high local flue gas velocities, with high ash loading, and with abrasive particles such as quartz.

Corrosion

Corrosion is deterioration and loss of material due to chemical attack. There are two basic categories in boiler tubes:

- Internal corrosion: hydrogen damage, acid phosphate corrosion, caustic gouging, and pitting
- External corrosion: waterwall fireside corrosion, superheater (SH)/reheater (RH) fireside corrosion, and ash dewpoint corrosion

Creep, fatigue, erosion, and corrosion can act by themselves—or most likely, act together—to cause boiler tube degradation or failure. If the failure mechanism is a compound of the four basic mechanisms, then root-cause analysis can be very complex. The interactive boiler tube failure mechanisms include corrosion fatigue, stress corrosion fatigue, dissimilar metal weld failure, erosion/corrosion in economizer inlet headers, and rubbing/fretting of steam tubes.

The major boiler tube failure influence factors involve design inadequacies, operation changes, and maintenance practices. The relationships between these influence factors and four major failure mechanisms are listed in Table 1-1. EPRI has further defined 36 detailed boiler tube failure mechanisms and their qualitative relationship with these three influence factors, as presented in Table 1-2.

Table 1-1
Boiler Tube Failure Influence Factors

	Design	Operation	Maintenance
Creep	x	xxx	x
Fatigue	xxx	xx	
Erosion	x	xxx	xx
Corrosion	xx	xxx	
x = weak influence, xx = medium influence, xxx = strong influence			

Table 1-2
Relationship Between EPRI Boiler Tube Failure Mechanisms and Major Influence Factors

Water-Touched Tubes	Design	Operation	Maintenance
Corrosion fatigue	xxx	xx	
Flash erosion	x	xxx	xx
Hydrogen damage		xxx	
Acid phosphate corrosion		xxx	
Caustic gouging		xxx	
Fireside corrosion in coal-fired units		xxx	
Thermal fatigue in supercritical waterwalls	xxx	xx	
Thermal fatigue of economizer inlet headers	xx	xxx	
Erosion corrosion (economizer inlet headers)		xx	
Sootblower erosion	x	xx	xxx
Short-term overheating		xx	xx
Low-temperature creep	xx		
Chemical cleaning damage			xxx
Fatigue in water-cooled circuits	xxx	xxx	
Pitting in water-cooled tubes	x	xxx	
Coal particle erosion		x	xx
Falling slag damage	x	xx	x
Acid dewpoint corrosion		xx	
Steam-touched tubes			
Long-term overheating/creep	xx	xxx	
Fireside corrosion in coal-fired units	xxx	xx	
Fireside corrosion in oil-fired units		xxx	
Dissimilar metal welds	xxx	x	
Short-term overheating		xxx	xxx

Table 1-2 (cont.)
Relationship Between EPRI Boiler Tube Failure Mechanisms and Major Influence Factors

Water-Touched Tubes	Design	Operation	Maintenance
Stress corrosion cracking	xxx	x	
SH/RH sootblower erosion	x	xx	xxx
Fatigue in steam-touched tubes	xxx	xx	
Rubbing tubes/fretting	x		xx
Pitting (RH loops)	xx	xx	
Graphitization	x	x	
SH/RH chemical cleaning			xxx
Maintenance damage			xxx
Material flaws	xxx		
Welding flaws	xxx		Xxx
x = weak influence, xx = medium influence, xxx = strong influence			

It can be seen from Tables 1-1 and 1-2 that design is one of the major factors that influences boiler tube failures. The lessons learned in the past, which can be applied to the design to reduce or eliminate the failure of boiler pressure components, are the major focus of this report.

Contents of the Report

This report covers the following critical boiler pressure components: tubing, headers, and steam piping. The focus is on boiler pressure component reliability and availability improvement through initial design. The subjects described include:

- Boiler pressure component failure history and failure mechanisms
- Boiler cycle system selection and design considerations
- Environmental considerations
- Fireside corrosion and erosion
- Material, fabrication, and welding flaws reduction
- Design considerations for waterwalls and economizers
- Design considerations for superheater and reheater tubes
- Headers and piping design improvements

The ASME boiler and pressure vessel (B&PV) code does not address component design life. However, several techniques have been developed in the last decade for remaining life assessment for boiler pressure components. The potential for using these remaining life assessment techniques to assess and improve the initial design are described. Appendix A describes the use of EPRI-developed TUBELIFE/TULIP, BLESS, and PODIS computer codes to address problems of overheating, header design, and dissimilar metal welds, respectively. The quality of fabrication is an important part of the reliability assurance process. Appendix B describes the development of technical specifications for material and fabrication procurement.

2
SYSTEM DESIGN CONSIDERATIONS

Background

The goal of the boiler designer is to design a boiler that will fulfill its desired performance at the lowest life cycle cost. The efficiency, emission, safety, reliability, availability, operability, and maintainability of the boiler are important design considerations. In practice, there are many uncertainties or deviations—such as material properties, fabrication tolerances, installation practices, operating modes and environments—which have to be considered in the design. The designer has to make assumptions. Factors, such as wear, erosion, corrosion, fatigue, creep, and other interactive mechanisms, may have a larger impact on the boiler pressure components than originally anticipated. In addition to the factors of safety embedded in the ASME B&PV code, the designer frequently provides additional margins for the uncertainties in the original design to reduce the probability of failure. The system selection is the first step in the design process. The system selection can be predetermined by the purchaser or as a joint decision with consultants and equipment suppliers. The system selection is very important, and in the past, its major consideration has normally been efficiency. Other objectives such as reliability/availability, operability, and maintainability should also be considered. The final decision should be the life cycle cost. The system selection and other common issues among all components are described in this section. The component-specific problems are described in later sections.

Boiler System Selection and Design

Boiler Cycle Selection

Power-generating utilities are always faced with the decision of selecting the thermal cycle and design parameters (that is, temperatures and pressures) [12,13]. The net efficiency for a 2400 psi/1000°F/1000°F (168 kg/cm^2/538°C/538°C) single reheat boiler steam cycle is in the range of 33 to 34%. Rising energy costs require utilities to improve the cycle efficiency in order to achieve low generation costs. To substantially gain improvements in efficiency, it is necessary to increase the steam pressures and temperatures. There are many factors affecting heat rate other than the cycle itself; they include control range, reliability, fuel, maintenance requirements, and operation experience. Economics of the capital investment must be considered when selecting a pressure and temperature level. Cycles with operating pressures exceeding 4000 psi (168 kg/cm^2) and main superheat steam temperatures of 1100°F (593°C) are available. The steam side operational characteristics of subcritical and supercritical units are very important in selecting a cycle. Consideration of steam temperature control range, variable pressure operation, ramping

rate, frequency response, minimum load level, standby duty, and start-up times are important when selecting a boiler cycle.

The historical boiler availability in the United States in the 1960s indicates that the drum-type boiler has a higher reliability than the once-through subcritical and supercritical boilers. There are many factors that contribute to the poor performance of the once-through units. Among these are rapid increases in the unit size, new complex control systems, inadequate operator experience and training, and minimum incentives to design reliability into the plant. The vast majority of the new pulverized coal-fired capacity units sold in the last decade in the U.S. market have been 2400 psi (168 kg/cm^2) pressure drum boilers. However, deregulation of the power industry makes high-efficiency systems more attractive. The continuous design improvements and increasing operating experience have led to interest in supercritical units, specifically in the world market.

Furnace Size

The selection of a furnace and its circulating system is primarily based on adequate steam generation and complete combustion [14,15]. Other considerations include proper furnace-wall cooling and the maintenance of satisfactory furnace-wall metal temperatures and prevention of the excessive formation of slag deposits. For furnaces burning pulverized coal, the slagging consideration may require a larger furnace, which may result in relatively low furnace-wall absorption rates.

When firing oil, a larger amount of fuel reaction surface is available for combustion, which results in the ability to complete combustion in a smaller volume than the pulverized coal. This very rapid combustion process results in a more intense radiation of heat and consequently a very high localized heat absorption rate within the active burning zone of the furnace. To reduce these high absorption rates, a furnace selected to fire oil as a principal fuel must be increased in size above the minimum required to complete combustion only—the furnace must be increased to a size that will produce satisfactory furnace wall metal temperatures.

Furnace selection for natural gas firing allows the use of even smaller combustion chambers than for oil. In addition, the combustion characteristics of natural gas produce a more uniform heat release pattern within the furnace. Figure 2-1 illustrates the relative size of units designed for these three fossil fuels at high subcritical pressure levels. As can be seen, units designed exclusively for oil firing are not significantly reduced in size from units designed for coal. This closeness in size reflects the fact that a coal-fired unit has to be designed to prevent excessive slagging, whereas an oil-fired unit has to take into account, as a primary sizing factor, its furnace tube-wall integrity.

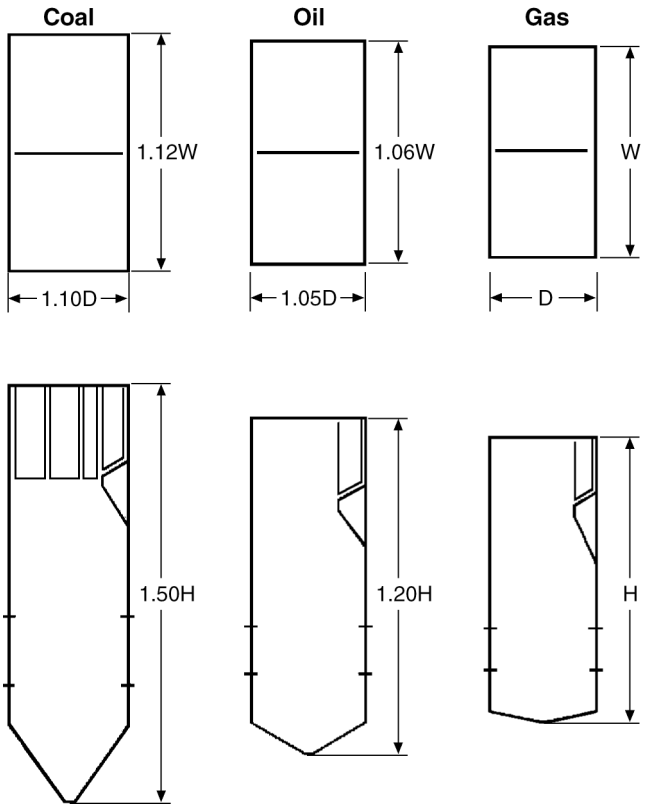

Figure 2-1
Relative Size of Furnace Wall Systems for Different Fuels

The proper sizing of the furnace is one of the most important factors in boiler design. In addition to its main function as described previously, the furnace's dimensions will strongly influence the arrangement of the firing equipment, the location and quantity of convective heat-transfer surfaces, the quantity and length of soot-blowing equipment, the arrangement of dust-collecting equipment and supporting systems, and the total cost.

Important design considerations for the proper sizing of the furnace include:

1. Net-heat-input-to-plan-area (NHI/PA) release rate. As the rank of coal decreases, furnaces increase in plan area and vertical height from the top fuel nozzle to the furnace arch. The NHI/PAs range from 1.5 x 10^6 Btu/hr-ft^2 (1.6 x 10^9 J/hr-929 cm^2) for severe slagging coals, through 2.1 x 10^6 Btu/hr-ft^2 (2.2 x 10^9 J/hr-929 cm^2) for low slagging coals. Additionally, equal emphasis must be put on design parameters such as combustion rate (Btu/ft^3, J/cm^3), firing zone release rate (Btu/ft^2, J/cm^2), and furnace release rate (Btu/ft^2, J/cm^2). Specific selection of these parameters relate directly to fuel and ash properties. In fact, there are some coals that require even more conservative furnace design parameters than those described. The impact of coal rank on furnace size is illustrated in Figure 2-2.

2. Distance from the upper fuel nozzle level to the furnace exit. Sufficient furnace dimensions, including adequate height between the top row of burners and the furnace exit, must be used to obtain the proper retention time for the combustion. Adequate furnace height is very

important if the over-fire air or fuel-reburn system is used for NO_x control. Adequate furnace height will also ensure that the uniformity of the flue-gas temperature at the entrance to the convection surface will be improved, especially for the tangentially fired system. The distance from the upper coal nozzle to the furnace outlet not only depends on coal characteristics but is also a function of the furnace width and depth. Current designs generally range from 45 to 60 ft (13.7 to 18.3 m).

3. Furnace exit gas temperature (FEGT). Sufficient waterwall heat transfer surface, given the slagging characteristics of the coal, is necessary to allow sufficient cooling of the combustion gas so that the fly ash is solidified before it enters the first pendant tube bank. This will minimize deposition and fouling of the pendant tube banks. The FEGT—a critical design parameter—separates the radiation zone from the convective zone. FEGT limitation is applied on startup until flow is established through the reheater. The design FEGT should be below the ash fusion temperature. The FEGT has been defined either at the nose elevation or at the vertical plan before the convective tubes. Wide-spaced panels are sometimes used in the upper furnace area. The purpose of the panels is to cool the flue gases so that the products of combustion are below the ash fusion temperature before they enter the closer-spaced convection surfaces.

4. The velocity of the flue gas must not exceed specified limits in order to control erosion from the ash in the coal. Depending on the ash analysis and quantity, the velocity is generally limited to 65 to 70 ft/s (18.3 to 21.3 m/s).

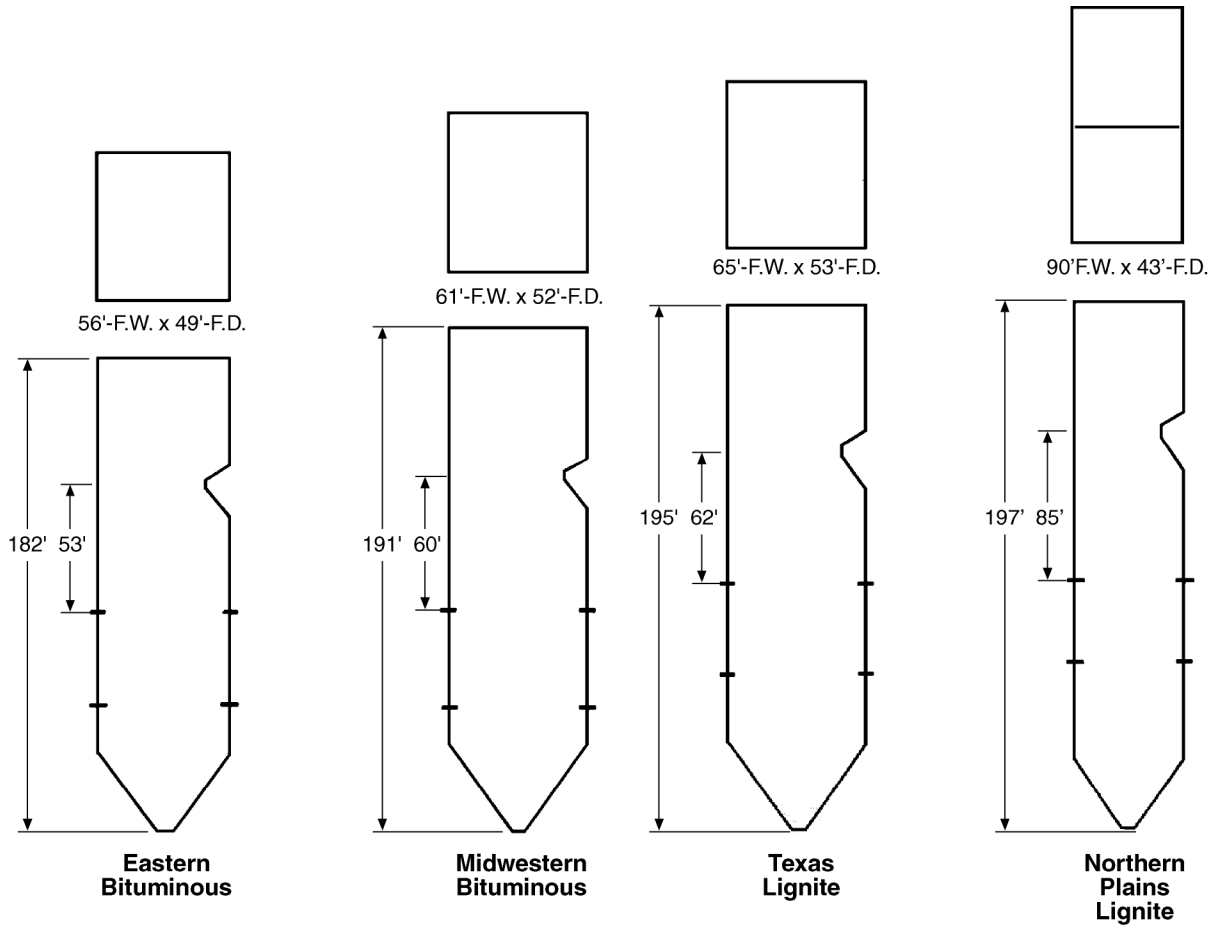

Figure 2-2
The Effect of Coal Rank on Furnace Sizing

Effect of Fuel Characteristics on Design

Fuel has a major impact on the design and operation of boilers [16]. Ash contributes to deposition, erosion, and corrosion. Slagging and fouling controls remain a major problem in boiler design. Boilers are usually designed to burn a specific type of coal. Often, the design coal is from a specific mine. Each of the boiler manufacturers has design parameters derived from experience and from measurements of the combustion characteristics of numerous coal types, which allows the various components of a boiler to be sized. All coals have certain similar characteristics that can be used on a relative basis to compare one to the other and their effect on furnace sizing. Several important fuel characteristics that strongly influence the boiler are described in the following paragraphs.

Moisture Content

The moisture content of solid fuels affects the design of the steam generation, including considerations of combustion gas weight, flue gas velocities, boiler efficiency, heat transfer rates, and low-temperature corrosion.

Ash Content

The ash content can affect the furnace slagging rate; fouling of superheater, reheater, and air heater surfaces; unburned carbon loss; the amount of particulate emission discharged into the atmosphere; and the quantity of bottom ash for disposal.

The quantity of ash per unit of heat input to a steam-generating unit when burning a high-ash coal may be two to three times the amount normally introduced when burning typical bituminous coals. This large quantity of ash, coupled with the unusual fouling characteristics of some of these coals, may require additional cleaning equipment to keep the furnace walls and convection tube banks in a clean condition. Furnace-wall blowers must be positioned around the periphery of the furnace walls at the required elevation to keep deposits on the furnace walls to a minimum. For units burning lignite, the distance between centerlines of adjacent wall blowers in the horizontal and vertical direction must be decreased below those used for bituminous coal, allowing for more effective furnace-wall cleaning patterns. For units burning western coal, a water blower may be required to remove the deposit on the furnace wall.

The bottom ash removal system must also be properly designed so that ash can be removed at a fast enough rate to keep the ash hopper loading within its design limits. An inadequate ash-removal system, regardless of the size of the ash hopper installed, can result in the ash pit being filled at a much faster rate than it can be unloaded. This can lead to a backup of ash into the furnace along the slopes of the water-cooled bottom and bridging over the opening to the ash hopper.

The higher ash quantities being carried through the unit accentuate the inherent problem of adequately sealing all openings and penetrations. This consideration has been thoroughly evaluated during the initial design phase of these plants, with the resulting decision to utilize balanced-draft operation, despite the higher auxiliary power required for the combined forced draft/induced-draft fan operation. The majority of coal-fired units and large oil-fired units now being designed are for balanced-draft operation.

Ash-Fusion Temperature

The ash-fusion temperature has long been recognized as a valuable index for evaluating performance with regard to slagging and fouling. If the temperature of the gases containing the ash is lower than the ash-softening temperature, the ash will probably settle out as a dust and, as such, is comparatively simple to remove. If, however, the ash is near its softening temperature, the resulting deposit is likely to be porous in structure. Depending on the strength of the bond, the deposit might fall off from its own weight or be removed by soot blowing. However, if the

deposit is permitted to build up in a zone of high gas temperature, its surface temperature will be elevated and may exceed the melting temperature, with resulting runoff as a molten slag.

The fusibility characteristics of ash vary as the chemical constituents change. The ash of most subbituminous coals and lignites are high in basic metals and low in iron content. Therefore, they have a higher softening temperature and, consequently, are less susceptible to slagging. These coals have a tendency to "dust" the furnace walls, and experience has shown that this type of deposit is easy to remove. This is not the case for midwestern coals, where the ash-softening temperatures is low and the ash is high in iron oxides and lower in the oilier base metals. These coals are particularly difficult to handle as far as furnace slagging is concerned, and great care must be taken not only in furnace sizing but also in the selection and placement of furnace wall blowers.

Slagging and Fouling

Slagging and fouling controls remain a major problem in boiler design [17]. Empirical indices have been developed for the evaluation of slagging and fouling potential. Advanced methods of analyses such as computer-controlled scanning electron microscopy and microprobe analysis are available. The results of these analyses provide composition and size information of mineral grains in coal and ash particles that can assist in understanding and predicting ash behavior in the boilers [8].

Slagging

The formation of slag deposits is caused primarily by the physical transport of molten or partially fused ash particles entrained by the gas stream. When the particles strike the wall or tube surface, they become chilled and solidified. The strength of their attachment is influenced by the temperature and physical contour of the surface and melting characteristics of the slag. The design of the boiler and its mode of operation affect slagging. Historically, several indices have been used for evaluating slagging potential. These include gravitational fractionation, ash-fusion temperature, base-to-acid ratio, iron-to-calcium ratio, silica-to-alumina ratio, ash loading, and viscosity. The design parameters that affect slagging include heat release rate per plan area, burner arrangement and burner zone heat released rate, furnace volume for combustion considerations, excess air level and furnace exit gas temperature, and sootblower numbers and locations.

Fouling

The volatile constituents in coal ash (Na_2SO_4 or $CaSO_4$-Na_2SO_4, and so on) cause fouling. These constituents condense on fly ash particles, boiler tubes, and deposits in areas where the temperature range keeps the constituents in liquid form. These constituents react chemically with fly ash, other deposits, and the flue gas to form bonded deposits. Two factors that affect fouling are deposit hardness and rate of deposition. Deposit hardness is affected by chemical composition, temperature, and time. The rate of deposition depends on the volatile constituents of the coal ash and the amount of ash present in the coal. The sintering strength of a coal ash is

an indication of how hard a deposit might become at different temperatures. The fouling-potential evaluation includes the weak acid leaching impact and coal ash constituents. The design parameters for fouling protection include convective section spacing, element depth, and sootblower location and cleaning radius. The ideal design sizes the furnace to cool the flue gas and ash particles to temperatures below the ash fusion temperature before they reach superheater surfaces. In connection with convective pass design and the associated considerations of fouling and erosion, the following fuel-ash properties are significant:

- Ash softening temperature
- Base-to-acid ratio
- Iron-to-calcium ratio
- Chlorine content
- Sodium, potassium, silica and aluminum content, and ash friability

Circulation System

The thermal-hydraulic design parameters of the boiler manufacturer must maintain sufficient cooling of the waterwall tube material so that the use limits of the material are not exceeded. Breakdown of the bulk mass flow regime initiates a majority of the boiler tube failures. There are three specific types of circulation systems [18,19]:

- Natural circulation systems depend solely upon the fluid static head difference between the downcomers and the heated circuits to produce circulation and to maintain sufficient fluid mass velocity and steam-water mixture quality for adequate furnace wall cooling. Natural circulation systems are used in the drum boiler. These units require the use of relatively large flow areas in the pressure parts in order to maintain the circulation system resistance as low as is practical.
- Controlled circulation systems are also used in the drum boiler to use boiler water recirculating pumps to assist the thermal circulation.
- In supercritical pressure boiler designs, there is no recirculation of steam or water within the unit. The supercritical fluid has no latent heat of vaporization. Therefore, the fluid temperature constantly increases through the unit. There is very little thermal storage compared to a drum type of unit. Once-through circulation systems can be used in the subcritical pressure design. The system designs vary depending on the supplier.

For drum units, the key feature is that the flow of water and the nucleate boiling process adjacent to the tube wall are disrupted and a local steam “blanket” is formed. Steam blanketing and dryout are caused by any of several different sets of conditions, including stratification, excessive deposits, crevices, reduced fluid flow, excessive heat flux, and local flow pattern obstructions each requiring a different route to prevent repeat failures. DNB conditions can result in a short-term overheat failure if the tube is vertically oriented and located in a high heat flux zone or possibly result in a corrosion failure if the tube is inclined (for example, a nose tube). DNB is a complex heat transfer phenomenon. Special geometry ribbed or rifled tubes may be required to

maintain adequate tube-wall cooling under this broad range of conditions. The internally rifled or ribbed tubes can provide substantial margins in heat absorption rate.

The relatively high furnace absorption rates associated with oil firing require a continual review of critical furnace design and operating parameters to ensure that as unit size increases, a more refined set of design parameters is utilized. This review includes detailed theoretical analysis supported by field data. The exact level and distribution of heat absorption rates are extremely important to the designer. For oil that uses tangential firing, the prime contributing factors to the level of heat absorption rates are furnace plan area, windbox sizing, excess air, and gas recirculation. The distribution is primarily a function of furnace arrangement. Because of relatively high local furnace heat-absorption rates with oil firing (125,000–175,000 Btu/hr-ft^2, 132–185 MJ/hr-929 cm^2), encountering DNB is a very distinct possibility at subcritical pressures. This action produces a rapid deterioration of the inside film coefficient with a corresponding increase in the temperature differential across the inside fluid film. Observations indicate that as the heat absorption rate increases, the steam released by nucleate boiling on the inside surface of the tube is no longer released as bubbles but forms a semi-stable blanket of steam. At its initiation, DNB is unstable because cyclic changes between nucleate boiling and steam blanketing will occur, resulting in fluctuations in tube metal temperatures. Under these conditions, furnace wall tube temperatures may increase as much as 200–300°F (93–149°C) over those encountered with nucleate boiling.

Once-through boilers, by design, incorporate a region in which film boiling controls the heat transfer process. Correct design locates this region in an area of relatively low heat flux and incorporates materials with suitable strength and oxidation resistance at the temperatures achieved. Such a design requires the strictest control of water quality.

For once-through boilers, spiral-wound circuitry can be an option. Spiral circuitry was developed in Europe during the 1960s and is now practically the only utility boiler design used there. This design provides improved reliability for the once-through boiler. The vertical multiple-pass system is replaced by inclined tubes that spiral around the furnace enclosure, typically making at least a single pass around the full furnace from the hopper to the upper furnace region where a transition is made to vertical tubes. Advantages of the spiral-wound furnace circuitry include:

- Provides uniform heat absorption by all furnace tubes
- Is insensitive to changes in the heat absorption pattern in the furnace
- Eliminates orifice valves for controlling flow distribution to the furnace circuits
- Permits the use of larger furnace tubes, which are less sensitive to internal roughness and resistance changes resulting from internal deposition
- Is capable of variable pressure operation

The spiral furnace walls have difficulty being self-supported. Special considerations are needed for the support system and the configuration near either the wall-fired or corner-fired burner arrangement. The cost of the unit is higher. The modified vertical wall arrangement was proposed in Europe for the circulation design, which can reduce the initial cost.

Convective Tubing Spacing

Equally important to sizing of the furnace is the arrangement of the superheater, reheater, and economizer heating surfaces located in the upper portion of the furnace and in the convection pass. In locating the various sections within the unit, a proper balance must be achieved between adequate thermal head for transfer of heat between gas and steam and the metal temperatures of the tubes, which must be kept at a level below the point at which metal wastage occurs.

Past operating experience on units firing coal indicates the necessity of using adequate transverse spacing throughout the unit to reduce the fouling rate and prevent bridging of ash deposits between adjacent assemblies. The arrangement and spacing of the pendant tube banks should be so that the bulk flue gas velocity is selected to maximize the heat transfer from the progressively cooling flue gas, while limiting the gas velocity to the desired level at which erosion of the tubes is within acceptable limits. This limiting flue gas velocity depends on the ash loading of the flue gas and the erosivity of the fly ash and actually refers to the maximum velocity at any part of the tube bank. The value of this design flue gas velocity influences the overall size of the boiler.

Because some coals have caused problems with fouling and plugging of pendant surfaces, horizontal superheaters, and economizers, one boiler manufacturer has reported that the clear spacing for newer units has been increased between adjacent assemblies, as shown in Table 2-1. For western coal, tube spacing could be increased further [20,21,22].

Table 2-1
Convective Pass Tube Spacing

Gas Temperature	Non-Fouling Coal	Fouling Coal
2400–2000°F (1316–1093°C)	Platen: 22 in. (56 cm) clear	Platen: 22 in. (56 cm) clear
1999–1750°F (1093–954°C)	Spaced: 7 in. (18 cm) clear	Platen: 12 in. (18 cm) clear
1749–1450°F (954–788°C)	Spaced: 3 in. (7.6 cm) clear	Spaced: 5 in. (13 cm) clear
1449–1200°F (788–649°C)	Spaced: 2 in. (5.1 cm) clear	Spaced: 3 in. (7.6 cm) clear
1199–800°F (649–427°C)	In-line fin economizer	In-line bare tube
Maximum Flue Gas Velocity: • Non-abrasive coal: 70 ft/s (21 m/s) • Abrasive coal: 55 ft/s (17 m/s)		

Cycle Chemistry

The purity of boiler water, feedwater, and steam is one of the most important criteria for ensuring the availability and reliability of components. The prevention of boiler tube failures requires a cycle chemistry that is specifically designed and adopted for the particular unit [9]. For many boiler tube failures, the simplest and most cost-effective means of prevention lies in one of the cycle chemistry control options. Contaminants such as chlorides, sulfates, organics, air, and CO_2 enter the condensate part of the cycle. Sources for such impurity ingress into the steam and/or water process cycle include:

- Condenser cooling water inleakage
- Air inleakage
- Makeup demineralizer, evaporator, or condensate polisher effluent contamination

Corrosion products are generated in feedwater heaters and condensers and flow into the boiler where they deposit in high heat flux locations and provide the initiating event for under-deposit corrosion boiler tube failure.

Boiler Water Treatment

One of the most important choices is the boiler water treatment. For drum units, this includes:

- Phosphate treatment (PT), equilibrium phosphate treatment (EPT), or congruent phosphate treatment (CPT)
- All-volatile treatment (AVT)
- Caustic treatment (CT)

For once-through units, the boiler water is controlled by the feedwater treatment.

Phosphate Treatments

Phosphate provides good buffering of acids and hydroxides and precipitates residual hardness, forming removable sludge (hydroxyapatite) [25]. Coordinated pH-phosphate control was introduced to protect boiler tubes from "caustic embrittlement" as well as the effects of condenser in-leakage of water hardness contaminants. The alkalinity levels preserve magnetite and provide protection against "caustic under-deposit" corrosion attack and hydrogen damage from "under-deposit acidic chloride" attack. The use of coordinated treatment led to a number of failures believed to be caustic gouging and, as a result, the move to the use of CPT with an operating range below the curve of molar ratio $Na:PO_4$ of 2.6. Guidance about the application, monitoring, and actions levels for the use of CPT was provided in the interim cycle chemistry guidelines [23,24].

Many utilities have experienced phosphate hideout (a decrease in phosphate and an increase in pH with increasing load) and hideout return (when the unit load is decreased, an increase of phosphate occurs with a pH depression). Phosphate hideout has usually not been regarded as harmful, but the depression of pH to below 7 or 8 on startup can exacerbate boiler tube failures, particularly by corrosion fatigue. More often, problems, notably acid phosphate corrosion, arise from the use of acidic chemicals in a vain effort to "chase" hideout so as to maintain the control point within the CPT range.

Several investigations were made on the root cause of the phosphate hideout problem. The Canadian Electrical Association (CEA) conducted test results showed that maricite (a corrosion product) formed by reaction with mono- and di-sodium phosphate but not with tri-sodium phosphate [26]. An EPRI model boiler test study found that operation with a sodium-to-phosphate ratio of 3 with up to 1 ppm of free hydroxide did not produce corrosion. An international survey found that many utilities have operated without hideout and/or corrosion using EPT or a phosphate treatment with a sodium-to-phosphate ratio greater than 3 with a small level of free hydroxide. As a result of these studies, a revised guideline for phosphate treatment has been issued [13] with a goal of minimizing the occurrence of phosphate hideout and the continual correction in chemistry by additions of acid phosphates. Two phosphate treatments have evolved as approaches to the previous problems:

- PT broadens the control range above the sodium-to-phosphate 2.8 ratio curve and allows operation with up to 1 ppm of free hydroxide.
- EPT operates at a lower level of phosphate along with up to 1 ppm free hydroxide.

With phosphate treatments, the key objectives are to minimize or eliminate phosphate hideout and to use only tri-sodium phosphate as the phosphate addition. The treatments allow for the addition of sodium hydroxide (NaOH) to correct for low pH on startup and to increase the pH if a small contaminant enters. They also allow up to 1 ppm of free NaOH.

Caustic Treatment

Historically, there has been justified concern over the operation of units under high levels of sodium hydroxide and sodium phosphate treatment. As units began to operate at higher pressures, caustic gouging became a serious problem in units operating with sodium hydroxide. As a result, a number of variations on phosphate treatment described in “Phosphate Treatments” became the predominant chemistries.

Early plants had been operated with several hundred ppm of sodium hydroxide in the boiler water because autoclave studies had shown that sodium hydroxide levels of thousands of ppm were required to produce accelerated attack. ASME-sponsored work performed from 1963 to 1968 showed that a few ppm of impurities under boiling conditions could concentrate in boiler water to corrosive levels. Beginning with that work, there has been considerable refinement in the application of sodium hydroxide [27]. The key to successful use of caustic treatment lies in limiting the concentration of anionic impurities, particularly chlorides, and in the strict control of sodium hydroxide. There needs to be a minimum NaOH concentration to prevent acid conditions and achieve the required benefits, but the maximum level must be strictly controlled to prevent caustic gouging in the boiler, carryover into the steam, and damage to austentitic superheaters and turbines.

The EPRI interim guidelines, issued in the mid-1980s, make allowance for up to 5 ppb sodium in the steam [23]. More recently, a detailed study suggests that ideally to prevent deposition, the steam from high-pressure boilers should contain no more than 2 ppb sodium; well-operated units should achieve less than 1 ppb.

Benefits of CT over AVT include:

- Provides a higher tolerance to chloride in the boiler water, which is important for dealing with condenser leaks, particularly in units using brackish or sea water for cooling
- Reduces risk of acid corrosion
- Removes the need for a condensate polishing plant

Compared to PT, CT can:

- Offer reduced risk of corrosion due to the ingress of chloride
- Avoid phosphate hideout and associated complications
- Avoid the complications of monitoring and chemical control associated with phosphate chemistry
- Reduce the risk of producing either acidic or alkaline boiler water conditions (causes of several corrosion-related boiler tube failure mechanisms) as well as reduce the risk of general problems throughout the cycle

All-Volatile Treatment

Under AVT [28], there are generally no solid additions to boiler water, although the addition of NaOH or Na_3PO_4 is allowed to correct for pH on startup or as a response to contamination. The chemistry is set by the feedwater chemistry as described in the feedwater treatment section. Operation with a condensate polisher is generally required.

Feedwater Treatment

Feedwater treatment is the generation of feedwater corrosion products, usually originating in low-pressure and high-pressure feedwater heaters and the deaerators. The classical approach to feedwater treatment has consisted of adjusting pH with ammonia to 8.8–9.1 for mixed copper/iron systems and to 9.2–9.6 for all-ferrous systems, to deoxygenate the feedwater mechanically in the condenser and deaerator and to deoxygenate chemically by the addition of an oxygen scavenger. The belief was that all oxygen should be eliminated to control corrosion. This is the basic approach taken for all-volatile treatment. Until 1969, this approach was the only feedwater treatment applied worldwide in plant cycles with subcritical and supercritical once-through steam generators. In the United States, this was the case until November 1991. AVT can be applied to all units and is still the method of choice for plants with mixed metallurgy (copper and iron) in the feedwater train and/or for units without condensate polishers.

In deoxygenated feedwater systems, very low levels of oxygen (<5 ppb) in conjunction with high levels of an oxygen scavenger (such as hydrazine) result in conditions reducing to the materials in the feedwater train. Under such conditions, either the normal oxide (Fe_3O_4) is not protective on the ferrous alloys in the feedwater train or they break down, either event leading to an excessive production and transport of corrosion products. The reducing conditions are directly responsible for erosion-corrosion failures of economizer inlet header tubes. Indirectly, the deposition of such products is a contributor to at least seven other boiler tube failure (BTF) mechanisms: hydrogen damage, caustic gouging, acid phosphate corrosion, supercritcal waterwall cracking, fireside corrosion, short-term overheating, and creep. Just as for boiler water, the feedwater must be optimized. The variables of importance are metallurgy pH, cation conductivity, and oxygen. The following sections describe feedwater control in all-ferrous and in mixed metallurgy systems.

Feedwater Treatment for All-Ferrous Feedwater Systems

In all-ferrous feedwater trains, the major choices are deoxygenated AVT or oxygenated treatment (OT). The major difference between AVT and OT is that AVT attempts to minimize corrosion and erosion-corrosion using deaerated feedwater with an elevated pH, whereas OT relies on oxygenated, high-purity water to minimize corrosion and erosion-corrosion in the feedwater train up to the economizer inlet.

For AVT, the condensate is deaerated in two locations in the plant cycle: the condenser and the deaerator. Hydrazine is used as an additional feedwater conditioner because it is difficult to reach

an oxygen level of 5 ppb through the plant cycle using only thermal deaeration. The selected level for pH with AVT ranges between 9.2 and 9.6.

For OT, an oxygen level of 30–150 ppb is maintained across the whole plant [26]. Reduced pH levels (8.0–8.5) are possible because of the use of oxygen as the corrosion inhibitor.

Most units operating under AVT control can meet the interim guideline requirements [23,24] and action levels and have good availability. However, under AVT, even if it is properly applied, the transport of corrosion products can be substantial, particularly during transients and startups. The subsequent deposition of feedwater corrosion products is a contributor to a variety of water-wall and economizer BTF mechanisms and results as well in the need for increased chemical cleaning. As a consequence of these problems, a change to oxygenated treatment for appropriate units has become the recommended practice.

OT was introduced into the United States in 1991, and a large number of once-through units have subsequently been converted [29]. In 1994, the first U.S. drum unit was converted. The results have been outstanding, with very large reductions of feedwater corrosion products as a result of the more oxidizing environment and the change of the surface layers from magnetite to FeOOH.

To develop optimized feedwater treatment in all-ferrous systems, the key part is monitoring Fe, pH, oxygen, and the oxidizing-reducing potential at the economizer inlet as a minimum, for all types of operating regimes (for example, full and partial load, shutdown, and startup). Not all units with all-ferrous metallurgy may be suitable for conversion to OT. Some may not have a condensate polisher or be able to produce feedwater with cation conductivities of better than 0.15 μS/cm.

Mixed Metallurgy Feedwater Systems

Copper alloy corrosion in condensate and feedwater systems is a function of oxygen, carbon dioxide, and ammonia. As a result, mixed metallurgy feedwater systems (those containing copper-based alloys) generally need a reducing environment. Therefore, hydrazine or an alternate oxygen scavenger is required.

Environmental Considerations

Environmental control is an ever-increasing problem and must be considered an important boiler design parameter. The exhaust gases from combustion contain a variety of environmental pollutants. Presently, three types of emissions are considered significant from an air-quality standpoint: particulate matter, sulfur oxides (SO_x), and NO_x. Historically, particulate matter has received the greatest attention because it is easily seen. The concern about SO_x comes from its possible health effects and its potential to damage vegetation and property. NO_x is also significant because it participates in complex chemical reactions that lead to formation of photochemical smog. Both SO_x and NO_x have been implicated as precursors to acid rain.

Particulate Matter

Particulate matter is the non-gaseous portion of the combustion exhaust. The airborne ash leaving a pulverized-coal-fired furnace is a product of combustion beyond the control of the furnace designer, except for the very small contribution of the unburned solid combustible in the fly ash. Electrostatic precipitation and filtration are mostly used in modern fossil power plants. Many designs have proven to be capable of removing more than 99% of the particulate.

Sulfur Oxides

The desire for high combustion efficiency to completely utilize the available energy in the fuel has always been important. Through development efforts, the emissions of unburned combustible, carbon monoxide, and hydrocarbons have been virtually minimized in large stationary steam-generating units. Further, the complete conversion of sulfur to sulfur dioxide in a furnace is evidence of efficient combustion. Sulfur dioxide (SO_2) and sulfur trioxide (SO_3) are formed during the combustion process when sulfur contained in the fuel combines with oxygen from the combustion air. Before leaving the stack, SO_2 can combine with moisture in the exhaust gases to form sulfuric acid, which condenses onto particulate or remains suspended in the stack gases in the form of an acid mist. Major reduction of sulfur emissions has been achieved through:

- Switching to lower sulfur fuels. Switching to a lower sulfur coal does not apply to new power plants, which require a percent reduction in SO_2 emissions regardless of the fuel sulfur content.
- Fuel desulfurization methods. Fuel desulfurization processes range from coal washing to coal liquefaction and gasification to fluidized bed combustion.
- Flue-gas desulfurization systems. The flue-gas desulfurization system includes the lime or limestone wet and dry scrubber. Application of the dry scrubber process is limited to small-sized boilers.

Nitrogen Oxides

The formation of NO_x is quite involved and is difficult to predict precisely. Of the known oxides of nitrogen, only two, nitric oxide (NO) and nitrogen dioxide (NO_2), are emitted to the atmosphere in significant quantities as a result of combustion processes. In all high-temperature combustion processes using air as the oxidant, the combination of atmospheric nitrogen and oxygen results in the formation of NO. Although NO is thermodynamically unstable at lower temperatures, the decomposition rate is so slow that, once formed, the concentration remains essentially constant as heat is removed from the combustion gases. A small amount of NO is further oxidized to NO_2 as the combustion gases cool. The emission is the sum of these two oxides and is referred to as NO_x. NO_x is generated during combustion processes.

NO_x Formation Mechanism

NO_x formation in the combustion process is a result of either conversion of fuel nitrogen or atmospheric nitrogen with oxygen in the combustion air. NO_x generation levels are affected by unit design, operating conditions, and fuel characteristics. NO_x formation is attributed to three distinct mechanisms: thermal NO_x, prompt NO_x, and fuel NO_x.

- Thermal NO_x is formed through the mechanism of high-temperature oxidation of nitrogen from the air. The formation rate of thermal NO_x depends on the reaction temperature, the fuel-air mixture, and the residence time. NO_x formation decreases with increasing fuel-rich mixtures due to the preferential reaction of available oxygen with carbon and hydrogen. Fuel-lean mixtures tend to suppress NO_x formation due to the dilution of combustion air and depressing the reaction temperature. The amount of thermal NO_x formed is lastly determined by the residence time that the particle remains in the high-temperature region. NO_x formation increases exponentially with combustion temperatures above 2800° F (1538°C).
- Prompt NO_x is formed during the early phase of the combustion. Combustion is initiated under fuel-rich conditions at the tip of the burner nozzle, which produces intermediate hydrogen cyanide species. After reacting with the molecular nitrogen and hydrocarbon compounds, the hydrogen cyanide forms NO_x by way of oxidation. Prompt NO_x is a small fraction of the total NO_x emissions.
- All coals contain a certain amount of nitrogen. Fuel NO_x is the major contributor to the total NO_x emissions at coal-fired plants. During combustion, most of the fuel-bound nitrogen is released as molecular nitrogen, hydrogen cyanide, nitrous oxide, and ammonia. These bonds break more easily than the diatomic N_2 bonds so that fuel NO_x formation rates can be much higher than those of thermal NO_x. The fuel NO_x formulation depends on the volatilization process and the flame temperature. If the volatilization occurs in a fuel-rich condition, the nitrogen compounds will be converted to N_2 without forming NO_x. Fuel NO_x is much more sensitive to stoichiometry than to thermal conditions. Not all the nitrogen is released from the volatilization process. Some nitrogen remains in the devolatilization coal particle (referred to as char). The NO_x from char burning is difficult to control.

Influence of Coal Properties on NO_x Control

Pulverized coal combustion depends on its chemical and physical properties. Each fuel rank varies in degree of moisture, volatile matter, ash, and other chemical constituents. Fuel factors of importance in low NO_x coal combustion include:

- Fuel ratio. The coal fraction that burns as volatiles rather than char determines the portion of fuel nitrogen evolved as volatiles and the portion retained in the char. Fixed carbon-to-volatile matter ratio (FC/VM) is a key indicator to quantify the fuel effects on the NO_x generation. Burning high-volatile coal tends to reduce NO_x and unburned carbon.
- Fuel nitrogen. Fuel NO_x can account for up to 80% of the total NO_x emissions of the coal-fired plant.
- Particle size. Large particles of pulverized coal have an adverse effect on carbon burnout, NO_x level, carbon monoxide, slagging, and deposition.

- Other coal properties. Other coal properties reported to affect the conditions for low-NO_x combustion are sulfur, iron, and chlorine content. The high sulfur content contributes to the formation of corrosive compounds, especially at reducing conditions in the combustion. The high iron content may contribute to reduced ash fusion temperatures, causing slagging.

NO_x Control

The formation of NO_x in the combustion process is under the control of the designer and operator. When the problem of NO_x emissions is examined, it becomes apparent that some substantial changes in design and operation of combustion equipment will be required to produce the desired reduction without at the same time increasing the emissions of other pollutants or jeopardizing the safety and operating flexibility presently realized.

NO_x control options most frequently considered for boiler applications include combustion and post-combustion processes. It is important to incorporate the NO_x reduction strategies into the original boiler design to ensure the maximum benefits.

Combustion NO_x Control

Performance Design for Low NO_x

The following basic boiler design parameters can influence the baseline NO_x generation:

- Furnace size. The NO_x production will be less if the furnace size is larger. The large furnace size also means that the furnace heat release rate is less and combustion peak flame temperatures is lower. Coal-fired furnace-wall deposits would be expected to influence NO_x emissions because higher furnace gas temperatures would occur as the effectiveness of the furnace-wall heat transfer surface is decreased. More sootblowing in the furnace to reduce the slagging will keep the furnace cooler and the NO_x production will be less.
- Burner heat release rate. NO_x production will be less if the burner heat release rate is lower; lower heat release rate can be achieved using more burners.
- Tangential-firing. Experience indicates that tangential firing systems produce less NO_x. In the tangential-firing system windbox, the fuel is admitted at the corners of the combustion chamber through alternate compartments. Distribution dampers proportion the air to the individual fuel and air compartments. Thus, it is possible to vary the distribution of the air over the height of the windbox, vary the velocity of the air stream, and change the rate of mixing of the fuel and air. The fuel and air streams from each corner of the furnace are aimed tangent to the circumference of a circle in the center of the furnace and create a large swirl. Because the entire furnace acts as a burner, precise proportioning of fuel and air at each of the individual fuel admission points is not required. A large amount of internal recirculation of bulk gas coupled with slower mixing of fuel and air provides a combustion system, which is inherently lower in NO_x production.
- Excess air. NO_x emissions increase as excess air is increased with all fuels. Considerations for establishing minimum acceptable operating levels in a given application are emissions of

CO, smoke, or solid combustibles amid flame stability. Furnace slagging is an additional consideration for coal-fired units.

- Gas recirculation system. Recirculated gas mixed with the combustion air lowers the peak flame temperature by dilution in the primary flame zone and also reduces oxygen concentration, which minimizes NO_x emissions. Combustion temperature reduction is effective in reducing thermal NO_x but not fuel NO_x. This approach is only applicable to natural gas and oil-fired units.
- Over-fire air (OFA). Staged combustion can be achieved by installing over-fire ports above the burner. OFA methods to reduce NO_x from cyclone burners have been demonstrated to be a low-cost solution. OFA systems can be used in combination with low NO_x burners to achieve even more NO_x reduction. OFA combustion may not be desirable for high-sulfur coal firing. The formation of localized reducing atmospheres will cause unacceptable furnace tube wall corrosion. Operation of a boiler without adequate air results in the formation of hydrogen sulfide gas (H_2S), which is very corrosive. Waterwall tube surface metal temperature can also be a factor in corrosion. Recent study indicates that the wastage rates are substantially higher in supercritical units than in subcritical units.

Low-NO_x Burners

Low-NO_x burner design involves control of the mixing of fuel-rich and air-staging zones, which restrict the air and fuel mixing in the combustion zone. This reduces the amount of fuel nitrogen that is oxidized and minimizes NO_x formation in the early stages of combustion. Low-NO_x burners can be teamed with OFA for further NO_x reductions. The current generation of low-NO_x burners has achieved a reduction of up to 75% or higher in combination with OFA. Operational impacts include reducing boiler efficiency and increasing unburned carbon. To minimize the unburned carbon, manufacturers typically suggest coal fineness of 65–80% through 200-mesh and 98–99% through 50-mesh. This may include modifying the existing pulverizer with a dynamic classifier.

The tangential-firing system consists of a vertical array of burners and air ports mounted in each corner of the furnace. The fuel and air are injected into the furnace. A rotating fireball located in the center of the furnace is produced. The principle of air staging is used to reduce the level of oxygen in zones that are critical for NO_x formation. Further staging of combustion can be achieved by offsetting the fuel and air streams, producing a fuel-rich center and air-rich outer zones, like a horizontal form of air staging. Part of the air is directed from the fuel to the furnace wall to obtain staged combustion. This system is called a low-NO_x concentric firing system (LNCFS). Additional NO_x reduction can be achieved by using either close-coupled or separated OFA ports. There are many commercially proven low-NO_x burners available.

Fuel Reburn

The reburn process involves the injection of a supplemental fuel into the main furnace to create an oxygen-deficient environment that encourages reduction of NO and NO_2 to N_2 [34]. Different fuels such as natural gas, coal, and oil can be used as the reburning fuel. It is important that the fuel is easy to ignite and has low nitrogen content. Solid fuels must have a high volatile content

and must be finely ground. Natural gas reburn has been demonstrated with the best results. The amount of reburn fuel required varies between 10 and 20% of the net heat input. The natural gas reburning process uses the following three separate combustion zones to reduce NO_x emissions:

- The first zone consists of the normal combustion zone in the lower furnace in which 75–80% of the total fuel heat input is introduced with about 10% excess air.
- The second combustion zone, called the reburn zone, is created above the lower furnace by operating a row of natural gas burners at a stoichiometric ratio of about 0.80–0.95.
- The introduction of 15–20% OFA to complete combustion of the unburned fuel in the upper furnace comprises the final zone.

Adequate residence time within the furnace for both the additional burning zone and the associated OFA burnout is required for optimal performance. For applications with adequate residence times, reburn technology has demonstrated reductions in NO_x of 40–65%. Fuel reburn will primarily be a retrofit technology, and cyclone units are prime candidates.

Post-Combustion NO_x Control Options

Selective Non-Catalytic Reduction

In selective non-catalytic reduction (SNCR), ammonia or urea-based reagents are injected into the furnace exit region, where the flue gas is 1550–2200°F (843–1204°C). The efficiency of this process depends on the temperature of the gas, the reagent mixing with the gas, the residence time within the temperature window, and the amount of reagent injection. The location of this temperature window changes as a function of unit load, so multiple injection levels are usually installed. The performance of SNCR systems is a function of boiler arrangement and allowable ammonia slip. On a given boiler, the ammonia slip increases as the NO_x reduction increases. The conventional philosophy for coal-fueled boilers limits ammonia slip to 5 ppm or less, which leads to NO_x reduction of 20–35%. However, recent experience indicates that to ensure reliable air heater operation, ammonia slip values should be limited to 2 ppm or less. The application of SNCR must be carefully assessed because its effectiveness depends on combustion device design and operation.

Selective Catalytic Reduction

With a selective catalytic reduction (SCR) system, ammonia is injected into the flue gas stream upstream of a catalyst bed. Ammonia in the presence of the catalyst reacts with both NO and NO_2 to form nitrogen and water vapor. SCR systems have been used on coal-fired boilers throughout Germany and Japan for many years and are now starting to be used in the United States. The ammonia (either aqueous or anhydrous) is received and stored as a liquid and is then vaporized, diluted with air, and injected into the flue gas. Injection of the ammonia must occur at catalyst temperatures between 450 and 750°F (232 and 399°C). Therefore, the catalyst is typically located between the economizer outlet and the air heater inlet. An SCR system consists mainly of an ammonia injection grid, an SCR reactor, and associated ducting. The SCR reactor is the core of the system, which is an assembly of catalyst baskets consisting of elements made of

homogeneous ceramic honeycomb or plate-type catalyst cells. A variety of catalysts are available for various applications. The major components of the catalysts are titanium dioxide (TiO_2), tungsten trioxide (WO_3), vanadium pentoxide (V_2O_5), and molybdenum trioxide (MoO_3). The actual compositions of the catalysts are proprietary to the catalyst supplier. NO_x control efficiencies can be up to 95%, depending on the following:

- Type of catalyst
- Area of catalyst surface exposed to the flue gas
- Residence time of the gas in the reactor
- Amount of ammonia injected upstream of the reactor
- Effectiveness of the mixing of ammonia and gas
- Sulfur content in the fuel
- The extent of any dust loading

The most significant operating parameters are:

- Flue gas temperature. The NO_x removal efficiency peaks at a certain temperature for a given catalyst. The choice of catalyst must consider the range of operating temperatures.
- Oxygen concentration. Oxygen is needed in the flue gas for dentrification. As oxygen concentration increases, catalyst performance improves until it reaches an asymptotic value.
- Water vapor concentration. The higher the water vapor content in the flue gas, the lower the catalyst performance.
- Aging effect. The performance of the catalyst tends to deteriorate over time. The rate of deterioration is large in the beginning of operation and becomes rather gradual after settlement.
- Ammonia slip. The NO_x removal efficiency increases with increasing ammonia slip and reaches an asymptotic value at a level of excess ammonia. Excess ammonia is environmentally harmful. Excess ammonia combined with water vapor and SO_3 can form ammonium sulfate ($(NH_4)_2SO_4$) and ammonium bisulfate (NH_4HSO_4). Ammonium sulfate contributes to the quantity of particulate in the flue gas. Ammonium bisulfate can deposit on the catalyst layers and downstream equipment causing flow blockage. Unless SCR systems can be operated to keep the ammonia slip below 2 ppm, air heater plugging can be a problem. The pressure drop resulting from an SCR system retrofit will be between 3 and 6 in w.g.

Hybrid Systems

Hybrid systems attempt to combine the features of SNCR and SCR. The reagent is injected in the boiler like a traditional SNCR system. However, rather than trying to minimize ammonia slip, NO_x reduction is maximized, and the resulting ammonia slip is used for further NO_x reduction in the catalyst bed. Typically, the catalyst is installed inside the ductwork to minimize cost. A variation of the hybrid concept is the installation of the catalyst material in the regenerative air heaters. The catalyst allows the SNCR to have the greatest amount of effectiveness while

maintaining ammonia slip as low as 2 ppm. Performance is based on SNCR effectiveness, catalyst volume, velocity through the catalyst, and distribution of the ammonia slip within the flue gas stream.

NO_x Technology Selection

Selection of applicable NO_x control technologies depends on a number of fuel, design, and operational factors. One technology does not fit all. Careful consideration must be given to ensure compliance with minimum impact on performance, operation, and capacity. After identifying the applicable control technologies, an economic evaluation must be conducted to rank the technologies according to their cost effectiveness. The technologies can be used by themselves or in combination.

Cycling Operation

Generally, load-distribution requirements for utility systems in the United States have been approaching a somewhat standard pattern [35–37]. A typical company may have three distinct load requirements. Base load will normally be supplied by large nuclear and new high-efficiency fossil-fuel steam plants designed for 6000–8000 hours operation per year; intermediate load will be supplied by specially designed fossil-fuel steam plants and previously base-loaded fossil plants. The system peak load and reserve requirements can be supplied by low-efficiency installations required to operate for 500–2000 hours per year. These latter capacities will be supplied by gas turbines, old steam plants, and hydro-pumped storage plants. There is no clean-cut line of demarcation between load categories. Plants designed for one mode of operation may, in practice, be required to operate in other modes, which were not originally contemplated. The modes of operation include:

- Base-load mode. The unit is entirely base loaded.
- Two-shift operation. The boiler plant will operate weekdays at full load and be off line every night for 8–10 hours. In addition, the unit will be removed from service each weekend.
- Load cycling mode. The boiler is to operate weekdays at loads as controlled by the dispatcher during the day and at minimum load at night. The unit will be removed from service each weekend.

Cyclic thermal stresses resulting from changes in temperature impose significant design and operating problems on various components. Advanced analysis techniques are available to determine local cycling stresses for material fatigue consideration. The dominating factors in controlling ramp rate and cycling limitations are normally the turbine components. Analysis has shown that thick boiler pressure components (drum and secondary superheater outlet headers) can accept a steam temperature change at a rate of approximately 200°F/hr (93.3°C/hr) or above for an unlimited number of cycles. The economizer inlet header has some problems with cycling operation that can be resolved either by proper design or change of the operation method. Although the overall integrity for thick-wall pressure components can be maintained, local failures can occur. The weak locations include welds, welded attachments, heat effect zones, ligaments, boreholes, tube stubs, and fittings. The current “design-by-the-rules” code might not

be adequate to eliminate the local failures. Essential to an improved design is the detailed evaluation of local stress concentrations. Fabrication details and procedure improvements are also required to alleviate potential problems. Cycling-induced fatigue-related boiler tube failure prevention through design considerations are described in more detail in each component during later sections.

Fireside Corrosion

The most important species responsible for fireside corrosion [38,39] in coal-fired boilers are alkali metal compounds, sulfur, and chlorine. Complex alkali sulfates are formed on the heat transfer surfaces of the boiler from constituents of the fly ash and combustion gases. Chlorine appears to play a role in releasing the alkalis from the coal only if the levels are above about 0.2 weight percent. There is some evidence that the corrosiveness of these deposits increases with increasing coal sulfur content over about 2%. Conversely, some levels of compounds such as MgO and CaO (or some ratio of the sum of these compounds to the sum of the alkali metals expressed as oxides) in the ash can reduce the corrosivity of the deposits by raising the melting temperature of the complex sulfates. In estimating the potential for corrosion of a given coal, a general guideline is that for coals with sulfur levels above about 2%, changes in the content of volatile alkali metal compounds have a stronger influence on corrosion than do changes in sulfur content. Ash content should also be considered because dilution of the corrosive species in the deposits by ash can act to mitigate their effects.

In a pulverized coal-fired (PC) boiler, some of the more dense mineral constituents of the coal (some of the iron pyrites, for example) are separated out in the pulverizers and are removed periodically as pulverizer rejects. The coal fed to the furnace typically has a particle size specified as 70% passing 200 mesh, or 74 μm (0.0029 in.). Once coal particles are introduced into the flame, the moisture and the volatile species are driven off, the fixed carbon in the individual particles begins to burn, and contained mineral matter may be melted or vaporized and is largely oxidized. The sulfur-containing compounds in the coal, such as iron pyrites and organic sulfates, are converted to oxides such as Fe_2O_3, K_2O, Na_2O, SO_2, and SO_3. The relative proportions of SO_2 and SO_3 formed in the flame depend on the oxygen available and temperature. SO_2 is favored thermodynamically at higher temperatures; the formation of SO_3 can be catalyzed by certain metal oxides, so that the proportion of SO_3 in the flue gas may increase downstream of the burners, especially in the vicinity of the oxidized surfaces of the first pendant tubes. Both K_2O and Na_2O are vaporized at the typical flame temperature near 2800°F (1538°C). The gaseous species released as the coal passes through the flame contain potential corrosives, the most important of which are sulfur, vapors of alkali metal salts, and chlorine compounds (mostly HCl). The sulfur may be present as sulfur dioxide, sulfur trioxide, or as hydrogen sulfide, depending on the local stoichiometry of the flame as the combusting gas moves away from the burners. The particular form of the alkali metal species may be oxides, hydroxides, or sulfates, depending on the possible reactions occurring in the vapor phase with sulfur and various oxides released from the coal. Regardless of form, these vapor species will deposit out on contact with surfaces at temperatures lower than the condensation temperatures of the specific species (about 1623°F [884°C] for Na_2SO_4). This provides a mechanism for the formation of deposits of fly ash on cooled surfaces downstream of the furnace, and for the continuous accumulation of alkali and sulfur species in such deposits.

With properly adjusted burners, the combusting char particles would be carried up through the furnace, during which time combustion is completed and the ash solidifies, before it enters the pendant tube banks. Some particles, however, will impinge on the furnace walls. Whether they stick to the walls or to each other to form agglomerates, which then attach to the walls, depends mainly on the melting temperature of the constituents of the mineral matter. A number of approaches to classifying the tendency of coals to form slag deposits have been based on various ratios of acidic and basic constituents in the coal ash. As might be expected from the wide variety of coal chemistries, none of these slagging indices has found universal application.

In cyclone-fired boilers, coal is thrown against molten ash residing on the inside surface of the cyclone burner. The water-cooled tubes in the cyclone wall are protected from the molten ash by a layer of solidified or "frozen" ash. There have been few reported instances of corrosion of the tubes making up the wall of the cyclone. However, the high-temperature combustion that occurs in the cyclone burner causes a greater fraction of alkalis in the ash to be vaporized than in a PC burner. This vaporized alkali may contribute to corrosion reactions on downstream boiler surfaces. The fact that cyclones capture 70–85% of the coal ash significantly reduces the amount of fly ash to which convection pass tubes are exposed. Hence, erosion rates of the pendant and rear pass tubes in cyclone-fired boilers should be low.

Additional information can be found in Section 4 for waterwall wastage problems in NO_x firing and in Section 5 for superheater and reheater coal ash corrosion.

Fireside Erosion

The factors in coal that contribute to fireside erosion [38] problems are those large particles of dense minerals such as quartz and iron pyrites that may pass through the flame relatively unaffected, and those mineral constituents that may be converted during combustion to hard/abrasive compounds such as alumina- or silica-based oxides. The size and shape of these compounds as they occur in the fly ash are of particular importance and may relate to the size and form of the minerals in the coal. The potential for fireside erosion can therefore be roughly judged from the ash content and the levels of, for instance, $A1_2O_3$ and SiO_2 (especially in the form of alpha quartz) in the ash. Coals containing large particles of minerals (such as quartz) are, in addition, expected to produce fly ash that is more erosive than those in which the same quantity of minerals is finely distributed.

Generation of Corrosive and Erosive Species

Where the mineral constituents in the coal are dispersed in clay-type compounds, the resulting fly ash particles usually have the form of cenospheres. These hollow spheres appear to consist of fused aluminosilicate glass. The trace elements from the coal are apparently concentrated on the outer surfaces, but there is no unique bonding material that holds the particles together. Cenospheres do not appear to be intrinsically very efficient erodents because they have smooth shapes and a low density. They are, however, apparently quite friable and if they break on impact with tubes, sharp-edged fragments will be created; whether these now form efficient erodents depends on the kinetic energy with which they strike the target surface, which in turn depends on

the size and density of the fragments and the velocity attained before impact. When large particles of pyrites or quartz are present in the coal, these may not fully melt in the flame and may pass into the fly ash relatively unchanged. Examination of samples of fly ash from pulverized coal boilers reveals a mixture of cenospheres and irregular, apparently non-fused particles. Many of these irregular particles are rich in silicon or iron, and some may be quartz. Quartz particles of this type may be largely responsible for the erosivity of some fly ashes.

Causes of Fly Ash Erosion

Light erosion damage is usually manifested by polishing of the affected surface. The eroded area is often quite clean and free of deposits. More severe erosion results in the generation of thinned and flattened areas. Erosion tends to be localized to particular areas of the boiler and to particular parts of a given tube bank. Localization of erosion by eddy flow around a weld bead on a tube is not uncommon. Erosion failures are usually of the "cod-mouth" type with thinned edges.

From numerous studies of erosion, it appears that the most important variables are what may be termed "systems variables," such as fly ash particle velocity and angle of impingement, and "operating variables" resulting from the type of coal burned and the combustion conditions, which define the size, shape, density, hardness, and number density of the fly ash particles. The effect of impact velocity is particularly important because the rate of erosion loss is usually found to be proportional to the velocity raised to a power of between two and four. This effect has long been incorporated into boiler design philosophy in the form of design gas bulk or average velocity limits. Typical design values for the average flue gas velocity range from about 65 ft/s (20 m/s) for eastern coals down to around 40ft/s (12 m/s) for highly erosive coals. At bulk gas velocities in this range, erosion is rarely encountered; any erosion damage that does occur is due to local turbulent conditions. Because the rate of material removal by erosion is directly proportional to the number of individual impacts, the ash loading in the flue gas is an important factor, which can be taken into account when initially sizing a boiler to burn a given coal. Erosion damage is a potential problem at any point on the fireside of the boiler where the ash-laden flue gas contacts boiler tubes or internal support structures at velocities and with particle loadings above some minimum values.

Fly Ash Properties

Attempts to relate the erosivity of fly ash to measurable physical or chemical parameters in the coal, notably by Raask [53] and Kratina [57], have resulted in some practically useful schemes. Raask developed the concept of an "erosive index" for coals, relating the erosivity to the quartz content of the fly ash, which he has defined as:

$$INDEX\ (I) = \frac{Erosion\ by\ Fly\ Ash}{Erosion\ by\ Equal\ Weight\ of\ 100\,\mu m\ Quartz\ Particles} \qquad \textbf{Eq. 2-1}$$

The value of I was generally found to range from 0.2 to 0.4. From experimental results, Raask [53] derived the following expression for the erosion rate of mild steel by 0.00394 in. (100 μm) quartz grains (at 752°F [400 °C]).

$$W_e = 9.5 \times 10^{-10} \times W_m \times U^{2.5}$$ **Eq. 2-2**

where

W_e = the weight of metal eroded (kg)

W_m = the weight of impacting particles (kg)

U = the velocity of the particles (m/s)

The corresponding expression for erosion by fly ash, using the erosive index, is therefore:

$$W_e = 9.5 \times 10^{-10} \times I_x \times W_m \times U^{2.5}$$ **Eq. 2-3**

Raask's correlations appear to be useful, even though the actual gas velocity at the locations where serious tube erosion occurs is not usually known with much accuracy, and the laboratory test method used was rather crude. Predictive plots from Raask's work suggest that at velocities of around 115 ft/s (35 m/s), erosion can cause tube failure in 10,000–50,000 hours. This is in good agreement with practical experience. At the usual design velocities of 49–66 ft/s (15–20 m/s), the erosion rates are predicted to be tolerable. Although Raask characterized the erosivity of fly ash simply by the silicon content (as quartz) of the ash, quartz is not the only erosive/abrasive mineral constituent of coal, even though in many coals it may be the major one, nor may its content be a sufficient criterion.

Kratina has investigated coal-based factors in erosion and has proposed an erosion-prediction method based on a "Coal Erosiveness Factor" (CEF), which combines the factors of ash loading and ash erosiveness of the fuel [57]. The CEF is determined as follows:

$$CEF = {8.25}/{HHV \times \%ash \times a_i (5 erodents) i}$$ **Eq. 2-4**

where

8.25 is a constant related to unit heat input

HHV = fuel heat value in Btu

a_i = the erosion index of the erodents present

The erosion index is determined as follows:

$$a_i\ (\%\,\text{erodents}) = a_i\,(\%\,\text{quartz}) + a_2\ (\%\,S_iO_2) + a_3\,(\%\,Al_2O_3) + a_4\,(\%\,F_{e2}O_3)$$ **Eq. 2-5**

Kratina has tests in progress to establish erosiveness values for each of the erosive constituents. Until data become available, they are treated as being equal, although this is likely not the case.

Interpretation of CEF values for tube bank velocities in the range of 50–65 ft/s (15–20 m/s) are shown in Table 2-2.

Table 2-2
Predicted Erosion Based on Coal Erosiveness Factor Values

CEF Value	Predicted Erosion
0–0.5	No erosion problem
0.5–1.0	Mild to persistent erosion
1.0–1.5	Serious to very serious erosion
1.5 or more	Severe erosion

If the predicted erosion rates are high, they can be modified by reducing design gas velocities for new units. For an operating unit, this requires derating. The advent of the cold air velocity technique provides a methodology for redistributing the air flow over the boiler cross section to remove local turbulent flow streams, to provide a uniform flue gas velocity, and to ensure that the gas velocity at all critical locations is reduced to a value at which the erosion rate is acceptable.

Control System

The progression of control system design over the years has migrated through pneumatic, magnetic amplifiers, discrete component analog, operational-amplifier-based analog, to today's microprocessor-based systems. The advent of the distributed control system (DCS) has changed power plant control from primarily analog-based to digital, combined separate functions of control and data acquisition, and allowed the continuing integration of the real-time plant process data with the enterprise-wide business function and networking. The low cost of the microprocessor made it practical to divide data acquisition and control into many functions, with each computed by a dedicated microprocessor. This offered the advantage of both a physically and a functionally distributed architecture, eliminating central points of failure.

A typical DCS architecture consists of various hardware devices connected to a communication network typically referred to as a data highway. These devices generally fall into the five major categories: human-machine interface (HMI), controller, data archive and retrieval, calculation unit, and engineer's console. All DCS controllers are programmed with some form of high-level function-block language. These languages have traditionally been custom, proprietary languages developed by DCS vendors. In the last few years, the situation has changed, and open systems have become commercially available on the market. DCS architecture allows systems to gradually expand by simply adding processors to the network with different software.

The preservation of boiler operation and performance includes meeting underlying design assumptions. The proper instrumentation, control logic, and control systems are required to assist

the operation personnel in performing safe, efficient, and reliable operation. Process control, performance diagnostics and condition monitoring are key technologies used to decrease or mitigate uncertainties. These technologies address three requirements:

- Safe and reliable operation established by process control
- Efficiency optimization facilitated by performance diagnostics
- Prevention of process and component deterioration detected by condition monitoring

These requirements may share the same database. The ideal case is that the operating control can also achieve efficiency optimization without damaging the components. It is difficult to reach this ideal condition with current practices because each control logic has its own evolution history. It will take advanced techniques with a detailed understanding of the interrelationship among these systems to reach a common goal. The future challenge is to integrate these procedures. Many systems and software based on artificial intelligence (AI) or artificial neural networks (ANNs) have been developed to assist operators in achieving these multiple objectives.

3
DESIGN CONSIDERATIONS TO REDUCE BOILER TUBE FAILURE FROM MATERIAL AND FABRICATION FLAWS

The design considerations for boiler reliability improvement are presented by each boiler component. Several items that are applicable to all boiler components are described in this section. The section addresses the general problems associated with the following failure mechanisms:

- Material selection deficiencies in the design
- Material and fabrication flaws
- Welding flaws

Material Selection

The purpose of a boiler tube is to transfer heat generated by the combustion process to the water and/or steam within the tube. The tube must have sufficient mechanical strength to contain the internal pressure and temperature, as well as adequate resistance to the environmental conditions—that is, corrosion and erosion on both fluid and fireside surfaces. These requirements must be continuously met over the lifespan of the boiler. Life cycle cost should be considered in the final design.

The primary responsibility for preventing misapplied material usage [9] and material/fabrication/welding flaws from occurring rests with the boiler designer, purchaser, fabricator, and constructor. Elimination of these problems requires close adherence to effective quality control procedures, beginning with the design and carrying through to boiler installation. "Upgrading" materials has often been used to resolve boiler tube failure problems in the past. This upgrading practice can be a result of operation changes—that is, burning different coals, low NO_x firing, cycling operation, and others. The upgrading practice might also imply potential inadequacy of the original design. For example, the design tube metal temperature is determined by the designer based on the experience and database of the boiler manufacturer. However, sometimes this is not adequate. It may be necessary to obtain the additional information from BTF history and actual operating data from old units to ensure the adequacy of the new design. Using higher-grade material may incur additional cost. However, the selection of high-grade material may only nominally escalate the total cost when the life cycle cost is considered, which includes the fabrication, installation, maintenance, and potential outage costs. The increase of baseline reliability to prevent potential BTF and to reduce or eliminate maintenance requirements might be worth the investment.

The primary consideration in material choice is a function of expected tube temperature of operation. Economizers and waterwall sections are usually constructed with a mild or medium carbon steel, whereas low alloy ferritic steels are used for most superheater and reheater sections, with austenitic stainless steels specified for the highest-temperature circuits or corrosion performance.

Alloys for use as boiler tube materials in the United States are identified by an ASME designation (SA-xxx) or an essentially equivalent American Society for Testing and Materials (ASTM) designation (A-xxx). ASME specifications are found in *ASME Boiler & Pressure Vessel Code, Section II, Part A:* "Materials Specifications for Ferrous Materials." The specific grade of material is required as well as the specification number. Table 3-1 provides an overview of the typical boiler tube materials, their basic composition, alloy designation, and general properties. A list of the minimum tensile and yield strengths of some commonly used boiler tube materials is provided in Table 3-2.

One of the critical factors in tube material selection is the thermal oxidation temperature. *ASME Boiler & Pressure Vessel Code* material selection does not consider the oxidation limits. Each manufacturer specifies a maximum operating temperature for each material, based on laboratory oxidation experiments. The ASME code allowables are based on the mid-wall tube temperature. The OD tube temperature, which should also be checked against the material oxidation limits, can be higher. The maximum tube metal temperatures for a selection of materials is provided in Table 3-3 for ASME code and selected boiler manufacturers' practice.

Care must be exercised to ensure that the upgraded material has the necessary properties to meet all the requirements of the location. For example, increased erosion resistance might not be found in conjunction with increased creep strength in a particular alloy. When looking for an upgraded property of one type, care must be taken to ensure that deterioration of another key property is not incurred. Another example is that a supercritical unit was designed with T22 material in the final reheater sections, and severe pitting was experienced in the lower vertical sections due to condensation water attack with inadequate offline corrosion protection. The T22 material was changed to stainless steel tubes to resolve the pitting problem. Within two years of replacing the T22 material with the stainless steel tubes, stress corrosion cracks were identified after BTF incidents. The stainless steel tubes were replaced by T9 material to reduce pits and avoid the stress corrosion cracking.

Table 3-1
Summary of Typical Boiler Tube Materials of Construction

Class of Material	Typical Alloy Designations	General Properties
Carbon steel	SA-178: Welded carbon steel SA-192: Seamless carbon-silicon steel SA-210: Seamless carbon-silicon steel	Hypoeutectoid steels. Mild corrosion resistance. Moderate strength up to 1000°F (538°C).
Carbon-molybdenum	SA-209-T1, T1a, and T1b: Seamless carbon-1/2 molybdenum steel SA-250-T1: Welded carbon - 1/2 molybdenum steel	Greater creep strength than carbon steels. Susceptible to graphitization with prolonged exposure above 875°F (468°C).
Chromium-molybdenum steel	SA-213-T2: Seamless 1/2 chromium - 1/2 molybdenum steel SA-213-T12: Seamless 1 Cr - 1/2 Mo steel SA-213-T11: Seamless 1-1/4 Cr - 1 Mo steel SA-213-T22: Seamless 2-1/4 Cr - 1 Mo steel SA-213-T21: Seamless 3 Cr- 1/2 Mo steel SA-213-T5: Seamless 5 Cr - 1/2 Mo steel SA-213-T5b: Seamless 5 Cr - 1/2 Mo steel SA-213-T5c: Seamless 5 Cr - 1/2 Mo steel SA-213-T7: Seamless 7 Cr - 1/2 Mo steel SA-213-T9: Seamless 9 Cr - 1 Mo steel SA-213-T91: Seamless 9 Cr - 1 Mo steel 1/2 V-X(Cb/N/Ni/Al) steel	Most common boiler tube materials (particularly T22 and T11). Each increase in Cr content yields improved properties, particularly higher strength creep properties, and improved corrosion resistance. Resistant to graphitization.

Table 3-1 (cont.)
Summary of Typical Boiler Tube Materials of Construction

Class of Material	Typical Alloy Designations	General Properties
Austenitic stainless steel	SA-213-TP304/304H: Seamless 18Cr - 8Ni austenitic stainless steel SA-213-TP316/316H: Seamless 16Cr -12Ni - 2Mo austenitic stainless steel SA-213-TP321/321H: Seamless 17Cr - 11Ni - Ti austenitic stainless steel SA-213-TP347/347H: Seamless 18Cr - 10Ni - Cb austenitic stainless steel	Excellent oxidation resistance and good elevated temperature strength. "H" following designation indicates higher carbon content and slightly higher solution heat treat temperature.
Ferritic stainless steel		For use in highly aggressive or high-temperature environment.
Martensitic stainless steel		For use in highly aggressive or high-temperature environment.
Nonferrous alloys	Ni - Cr (Alloy 600)	For use in highly aggressive or high-temperature environment.
Nickel-chromium-iron	Alloy 800 or 800H	For use in highly aggressive or high-temperature environment.

Table 3-2
Minimum Tensile and Yield Strengths

Tube Steel Type	ASME Specification[a]	Grade	Minimum Ultimate Tensile Stress (ksi)	Minimum Yield Stress (ksi)
Carbon Steel				
Electric-resistance welded	SA-178	A C	47[b] 60	26[b] 37
Seamless	SA-192	-	47[b]	26[b]
Seamless	SA-210	A1 C	60 70	37 40
Electric-resistance welded	SA-226	-	47[b]	26[b]

Table 3-2 (cont.)
Minimum Tensile and Yield Strengths

Tube Steel Type	ASME Specification[a]	Grade	Minimum Ultimate Tensile Stress (ksi)	Minimum Yield Stress (ksi)
Ferritic Alloy				
Electric-resistance welded	SA-250	T1	55	30
Seamless	SA-209	T1	55	30
		T1A	55	30
		T1B	55	30
		T2	60	30
Seamless	SA-213	T5[c]	60	30
		T9[c]	60	30
		T11	60	30
		T12	60	30
		T22	60	30
		T91	85	60
Austenitic Stainless Steel				
Seamless	SA- 213	TP304H	75	30
		TP316H	75	30
		TP321	75	30
		TP347	75	30
		TP347H	75	30

Notes:

1 ksi = 6.894 MPa

a *ASME Boiler and Pressure Vessel Code,* Section 1, “Power Boilers” – Part PG-9, “Pipes, Tubes and Pressure Containing Parts.”

b Not required by ASME material specification. For purpose of design, these tensile properties may be assumed.

c Not commonly used in modern boilers.

Table 3-3
Maximum Tube Metal Temperatures

Tube Steel Type	ASME Spec. No.	ASME[1] Max °F (°C)	B&W[2] Max. °F (°C)	C-E[3] Max. °F (°C)	Riley[4] Max. °F (°C)
Carbon steel	SA-178C	1000 (538)[5,6]	950 (510)	850 (454)	850 (454)
	SA-192	1000 (538)[5,6]	950 (510)	850 (454)	850 (454)
	SA-210-A1	1000 (538)[5,6]	950 (510)	850 (454)	850 (454)
Carbon moly	SA-209-T1	1000 (538)[7]	--	900 (482)	900 (482)
	SA-209-T1a	1000 (538)[7]	975 (524)	--	--
Chrome moly	SA-213-T11	1200 (649)	1050 (566)	1025 (552)	1025 (552)
	SA-213-T22	1200 (649)	1115 (602)	1075 (580)	1075 (580)
Stainless steel	SA-321-321H	1500 (816)	1400 (760)	--	1500 (816)
	SA-213-347H	1500 (816)	--	1300 (704)	--
	SA-213-304H	1500 (816)	1400 (760)	1300 (704)	--

Notes:

[1] From *ASME Boiler and Pressure Vessel Code,* Table PG 23.1. This is the highest metal temperature for which maximum allowable stress values are given.

[2] From *Steam: Its Generation and Use*, 1978 edition, p. 29-11 Table 3 [4].

[3] From *Combustion Fossil Power*, 1981 edition, p. 6-43, Table IV [5].

[4] From *Metallurgical Failures in Fossil Fired Boilers*, 1983 edition, p. 263, Table VI [10].

[5] Upon prolonged exposure to temperatures above about 800°F (427°C), the carbide phase of carbon steel may be converted to graphite.

[6] Only killed steels shall be used above 850°F (454°C).

[7] Upon prolonged exposure to temperatures above about 875°F (468°C), the carbide phase of carbon-molybdenum may be converted to graphite.

Note: Direct comparison of maximum metal temperature is not meaningful without information on design heat transfer analysis and actual material properties.

Some of the challenging issues for advanced system designs involve the selection of the high-temperature, high-strength materials for superheaters and improved corrosion-resistant materials for the furnace under low-NO_x combustion. Furnace wall corrosion has become an increasingly important issue for deep-staging low-NO_x combustion with high-sulfur coal. A number of coatings are being developed to protect furnace panels from fireside corrosion. To achieve the advanced steam conditions, new material will be required to demonstrate sufficient strength while still meeting corrosion requirements.

For header applications, P91 has demonstrated a combination of high strength, ductility, toughness, and thermal conductivity that makes it an excellent candidate for high-temperature headers to resist thermal fatigue. It is extremely important to develop the compatible fabrication procedures to ensure long-term serviceability, such as tube bendability and strain limits, weld metal and welding procedure, nondestructive evaluation (NDE) and heat treatment requirements, and creep rupture/fatigue properties of the welded joints and fabricated components.[13]

Material and Fabrication Flaws

The fabricator must purchase the raw materials to proper requirements of strength, ductility, toughness, and soundness and then shape them by machining, flame cutting, and hot and cold working. The materials must then be properly heat treated and separate portions joined together, generally by means of welding or in some cases mechanically. The parts must be tested at various stages of fabrication, both with test pieces destructively examined and the actual production parts nondestructively examined by such means as radiography, magnetic particle or dye penetrant, ultrasonic, eddy current, mass spectrometer, and hydrostatic tests. Welds must be as sound and have mechanical properties equal to or exceeding the base material.

BTFs from material flaws can occur in all tubes. Examples of material flaws include defects introduced into the tube during its manufacture, fabrication, storage, and/or installation [9–11]. Such defects might include:

- Forging laps
- Inclusions or laminations in the metal
- Lack of fusion of the welded seams
- Deep tool marks or scores from tube piercing, extrusion, or rolling operations
- Gouges, punctures, corrosion, impact dents

Failures from these defects are manifested in the intermediate stages with crack growth by fatigue, corrosion, or some combination; final failure occurs by fatigue or by stress rupture. Failures tend to be more predominant in high-temperature sections because of the interaction of flaws with the higher stress in these locations. Another failure mechanism, strain age embrittlement, can occur with replacement tube bends for water-touched service. This is caused primarily as a result of not hot forming tubes or not heat treating them after cold bending. One way of detecting this type of damage is to conduct a simple hardness test on the bend.

Seamless tubing is typically used in the power industry. Failures resulting from tube forming are relatively rare. Of those that do occur, one type of defect that is fairly common is lap defects. Lap defects are crevices in steel that are closed but not metallurgically bonded. They may occur in seamless tubes as a consequence of the presence of internal voids or cracks in the ingot from which the tube was formed. Lap defects can also be caused by faulty methods of steel rolling in the steel mill. Lap defects appear in a transverse cross section as straight or gently curving cracks, which may run longitudinally for some distance along the tube wall. Although the defect

commonly originates at a surface, it can be difficult to see because the surfaces of the defect are commonly covered with a layer of iron oxide or nonmetallic inclusions.

Welding Defects

A large, utility-size boiler may contain more than 50,000 welds. Each weld is a possible defect site [9–11]. Weld failure, especially field welds, have been a major concern for many utility companies. Because several materials and tube sizes are usually used in the SH/RH sections for the economic consideration, an effort to reduce the number of materials and tube sizes used can provide the advantages of reducing the number of weld joints, reducing the required inventory for the replacement tubes, and minimizing the potential of mistaken identification of the correct tube materials for replacement. Good documentation should be made of the material change and its location so that, if needed, repairs can be properly executed. Efforts should be made also to minimize the field welds by using the module sections as large as practically possible. Quality control is normally easier in the shop than in the field. Field weld failures have been serious problems for several utility companies in the past. Dissimilar metal welds should only be made in the shop. Minimizing field welds also provides the distinct advantage of reducing construction time, evaluated through "constructability reviews" with the installation contractor prior to the fabrication.

The purpose of a weld is to join two metals by fusing them at their interfaces. A metallurgical bond is formed that provides smooth, uninterrupted microstructural transition across the weldment. The weldment should be free of significant porosity and nonmetallic inclusions, form smoothly flowing surface contours with the section being joined, and be free of significant residual welding stresses. A complete listing of possible weld defects is well beyond the scope of this report. Only the common weld failures are described.

ASME design code generally does not describe the strength of weld joints, such as a full penetration butt weld, separate to the strength of base metal in the pressure component. This implies that the weld joint is expected to have equal or greater strength than the base metal. This assumption for a full penetration butt weld may be presumptuous because several major seam-welded pipe failures have occurred at such welded locations. It should be realized that welds might not be perfect. In consideration of this fact, all major welding codes allow for welding defects, but set limitations on the severity of the defect. An acceptable weld is not one that is defect-free, but one in which existing defects do not prevent satisfactory service. Some of the common potential weld defects and preventive actions are presented in Table 3-4.

Table 3-4
Common Weld Defects

Welding Defects	Identification	Prevention
Porosity	Porosity refers to the entrapment of gas bubbles in the weld metal resulting either from decreased solubility of a gas as the molten weld metal cools or from chemical reactions that occur within the weld metal. The distribution of pores within the weldment can be classified as uniformly scattered porosity, cluster porosity, or linear porosity. Porosity near surfaces seems to have a significant effect on mechanical properties of the weld.	Porosity can be limited by using clean, dry materials and by maintaining proper weld current and arc length.
Slag inclusions	Slag inclusions refer to nonmetallic solids trapped in the weld deposit, or between the weld metal and base metal. These inclusions may be present as isolated particles or as continuous or interrupted bands. Slag inclusions are not visible unless they emerge at a surface. Service failures are generally associated with surface-lying slag inclusions or inclusions that are of such size that they significantly reduce cross-sectional area of the wall.	The number and size of slag inclusions can be minimized by maintaining weld metal at low viscosity, preventing rapid solidification, and maintaining sufficiently high weld-metal temperatures.
Excess penetration	The excess penetration (extrusion) refers to disruption of the weld bead beyond the root of the weld. This disruption can exist as either excess metal or concavity on the backside of the weld. These extrusions are not desirable for the following reasons: The excess material can disrupt coolant flow, possibly causing localized corrosion downstream of the defect (water tube) or localized overheating downstream of the defect (steam tube). If severe, it can cause root-pass cracking. Such cracks may not be revealed by radiographic examination. Concavity can also substantially reduce fatigue life, and excess concavity has been involved in thermal-fatigue failures.	Excess penetration is frequently caused by improper welding techniques, poor joint preparation, and poor joint alignment. Because disruptions of this type are frequently inaccessible for repair, elimination consists largely in preventing them from occurring.

Table 3-4 (cont.)
Common Weld Defects

Welding Defects	Identification	Prevention
Incomplete fusion	Incomplete fusion refers to lack of complete melting between adjacent portions of a weld joint. It can occur between individual weld beads, between the base metal and weld metal, or at any point in the welding groove. This is also related to the inadequate joint penetration. Failures resulting from incomplete fusion of internal surfaces of the weld are infrequent, unless it is severe. Incomplete fusion at surfaces is more critical and can lead to failure by mechanical fatigue, thermal fatigue, and stress-corrosion cracking.	Incomplete fusion can occur because of failure to fuse the base metal or previously deposited weld metal. This can be eliminated by increasing weld current or reducing weld speed. Incomplete fusion can also be caused by failure to flux nonmetallic materials adhering to metal surfaces. This can be eliminated by removing foreign material from surfaces to be welded.
Undercut	The undercut refers to the creation of a continuous or intermittent groove melted into the base metal at either the surface (toe of the weld) or the root of the weld. Depending on depth and sharpness, undercutting may cause failure by either mechanical or thermal fatigue.	Undercutting is generally caused by using excessive welding currents for a particular electrode or maintaining too long an arc.
Inadequate joint penetration	Inadequate joint penetration involves incomplete penetration of the weld through the thickness of the joint. It usually applies to the initial weld pass or to passes made from one or both sides of the joint. On double-welded joints, the defect may occur within the wall thickness. Inadequate joint penetration is one of the most serious welding defects. Failures by mechanical fatigue, thermal fatigue, stress-corrosion cracking, and simple corrosion have been associated with this defect.	Inadequate joint penetration is generally caused by unsatisfactory groove design, too large an electrode, excessive weld travel rate, or insufficient welding current.

Table 3-4 (cont.)
Common Weld Defects

Welding Defects	Identification	Prevention
Cracking	Cracks appear as linear openings at the metal surface. Cracking of weld metal can be critical and has led to frequent failures. Cracking in weldments can occur in several forms: Hot cracking in weld deposit: Forms immediately upon solidification of the weld metal. Cold cracking in weld deposit: Forms after the weld has cooled. Such cracks may form days after the welding procedure. Base metal hot cracking: Forms upon solidification of the weld metal. Base-metal cold cracking: Forms after the weld metal has cooled.	Cracking normally results from poor welding practice, inadequate joint preparation, improper electrodes, inadequate preheat, and an excessive cooling rate. If cracking occurs in the weld metal, the following steps may prevent recurrence: Decrease welding travel speed. Preheat area to be welded, especially on thick sections. Use low-hydrogen electrodes. Use dry electrodes. Sequence weld beads to accommodate shrinkage stresses. Avoid conditions that cause rapid cooling. If cracking occurs in the base metal, the following steps may prevent recurrence: Preheat area to be welded, especially in thick sections. Improve heat-input control. Use correct electrodes. Use dry electrodes.
Welding debris	Welding debris such as weld spatter, shavings, filings, chips from grinding tube ends, and even welding tools have found their way into tubes as a consequence of tube repair. If this debris is not removed, it can cause partial blockage of coolant flow and result in overheating failures such as stress rupture. Such failures can occur months after the completion of the repair.	It is important to establish a “work clean” procedure.

Flaw Prevention

The flaws in original material, fabrication, installation, and welding have a major impact on the quality of the boiler pressure components as indicated by past boiler tube failure records. Once the flaws are introduced, the system baseline reliability suffers. Major economic penalties are incurred to fix these problems. Because problems can be spread everywhere, the detection of these types of flaws after installation is difficult. The primary strategy is prevention of the flaw [40].

The preventive actions involve mainly front-end control, which include:

- Prepare sound tube material procurement and technical specifications, which clearly specify applicable code and standards, QA/QC requirements, additional material and fabrication requirements (NDE, heat treatment, and welding procedures) based on the user's experience, and shipping/storage and receiving requirement. Life cycle cost consideration, not the initial cost, should be the base of the evaluation of the proposal submitted by the vendors.
- Conduct design reviews—including system analysis, thermal-hydraulics, and critical mechanical detail design—and material selection to ensure that reliability is considered. The users must understand the original design assumptions and limitations, which can be used as monitoring points. Theoretically, the BTFs represent some deviation or breakdown from the design condition, if the original design is sound.
- If a new material is to be used, establish solid conservative procedures and processes in the fabrication of components. There are many examples involving extensive BTFs in the past with new material, which resulted from lack of properly verified fabrication procedures. Caution should also exercised when using any new fabrication or welding processes.
- Perform source inspection during fabrication and installation, including NDE of tube material and tubing stock and in-process control of the fabrication processes. The major focus should be front-end process control to prevent flaws from occurring rather than the detection and rejection of defects. The goal should be zero-defect products. Any defects should be traced back to the root causes, and the process should be changed to eliminate future defects.
- Document weld locations and locations with changed tube material and tube sizes.

The enhancements, which can be implemented to address material, fabrication, installation, and welding flaws, are summarized in Table 3-5. Table 3-5 also lists the potential benefits for these design enhancements.

Table 3-5
General Considerations to Address Material and Welding Flaws

Activities	BTF Mechanisms Addressed	Benefits
Provide reliability requirements in the tube procurement/technical specification. Consider life cycle cost in the decision-making process.	Material flaws	Eliminate BTF.
Provide reliability considerations/requirements in the component procurement/technical specification. Consider life cycle cost in the decision-making process. Ensure that fabrication and welding processes/procedures/practices, NDE requirements, shipping protection, and acceptance criteria address the boiler component baseline reliability issues. The goal is to produce “zero-defects” boiler pressure components. Perform source inspection.	Fabrication, installation and welding flaws	Eliminate BTF.
Consider the coal quality variations in the boiler design. Design the boiler with operational flexibility and provide guidelines for operation changes to deal with the coal quality issues.	Fireside corrosion and fly ash erosion	Reduce or eliminate BTF. Provide operational flexibility and life cycle cost reduction.

4
DESIGN CONSIDERATIONS FOR WATERWALLS AND ECONOMIZERS

Under normal conditions in water-touched tubes for subcritical boilers, the steam-water temperature is limited to the saturation temperature for the given boiler pressure, and thus the tube temperatures are typically less than 750°F (400°C). In supercritical units, the water-touched tube materials typically operate to slightly higher temperatures (865°F [464°C]). As a result, high-temperature creep is not a consideration, and water-touched tubes are designed on the basis of short-term tensile strength properties and for indefinite life. In practice, however, this goal is not achieved: water-touched tube failures account for a large fraction of boiler tube failures. Also, low-temperature creep can occur in economizer tubing bends.

Plain carbon steel, such as SA-210 or SA-192, is most often used for subcritical boilers in North American units with some use of SA-213-T11 or -T22; the latter material is usually the material of choice for supercritical units.

Waterwall

Water-touched circuitries include furnace walls (frequently referred to as waterwalls), convective pass wall (some designs use steam-cooled circuitries), and economizer. Both tangent tube and membrane welded furnace walls have been used in the past. The membrane welded furnace walls provide a tight seal and should be the choice for new boilers. Welded furnace walls are one of the most important components of boilers. In addition to serving as the enclosure, furnace walls are an integral part of steam generation pressure components.

A wide range of operating conditions is encountered for which the welded furnace walls must be safe and reliable. The most important feature in the protection of a furnace wall tube against failure is the assurance of adequate circulation of fluid within the tube under all operating conditions. For this reason, the internal diameter of the wall tube is determined by the thermodynamic requirement for that particular type of furnace. The furnace tubes making up the furnace walls have the highest heat flux rates in the boiler and are subject to the most extreme fluctuations in temperature and pressure. During boiler startup, the wall is subjected to considerable overfiring. A wide range of pressure conditions is encountered as the unit is brought up to its normal operating level. The furnace wall enclosure must be designed so that it can withstand both positive and negative pressures, dead weight loads, wind loads, earthquake loads, and reactive loads between furnace walls, which require the rigid buck-stay system. It is necessary to distribute the heavy concentrated loads over a sufficient area so that large local distortions do not occur in the wall.

In addition to the pressure consideration, the wall panel requires flexibility to keep the thermal stresses within reasonable limits under normal operating conditions and severe thermal transients. Additional thickness can provide more tolerance for erosion and corrosion. However, a thicker wall tube may not improve the overall stress condition because the thermal stress increases rather rapidly with increased wall thickness. A change to a better material is the most satisfactory method of gaining improvement in strength requirements. For corrosion and erosion protection, better material or surface coating can be considered. Pressure boundary material options for improved resistance to waterside damage are limited. In particular, the use of austenitic stainless steel materials is prohibited for the waterwall tubes due to the susceptibility of these alloys to catastrophic failure from stress corrosion cracking. In addition, the high coefficient of expansion imposes some difficulty on the design.

Tube metal temperatures are an important factor in the manner in which BTFs develop. Tube metal temperatures depend on the heat flux from the fireside, fireside scale and deposit thickness, boundary films from both external and internal tube surfaces, fluid side deposit thickness, the internal mass flow rate, and the condition of the working fluid. Heat transfer through the tube wall occurs mainly by conduction and involves several temperature gradients, as shown schematically for a subcritical waterwall in Figure 4-1. Furnace gas temperatures near to the wall are typically approximately 2200°F (1200°C), but a massive gradient exists between this and the tube metal, mainly due to the cooling effect of the internal fluid but also due to low conductivity of the gas boundary layer and fireside scale. Under normal circumstances, without heavy internal deposits, the gradient through the tube metal is small, typically about 45°F (25°C), and a further drop occurs through the waterside magnetite layer and the boundary layer in the steam/water mixture. Excessive waterside deposit growth raises tube metal temperature by restricting heat flow. Excess fireside corrosion scaling reduces metal temperature in the affected area but can cause problems due to excess heat flux elsewhere in the boiler.

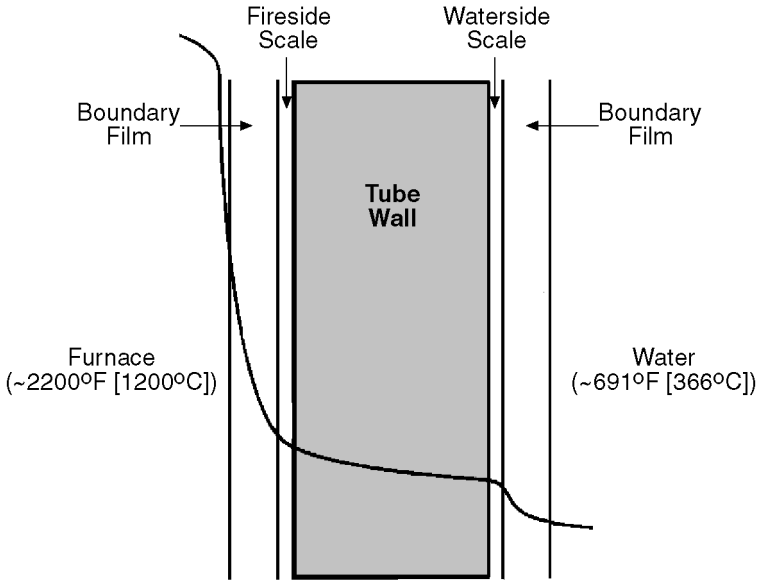

Figure 4-1
Schematic of a Typical Temperature Profile Through a Waterwall Tube

The ASME code has placed the responsibility for determining the metal temperature of all pressure parts on the individual manufacturers. Therefore, considerable effort must be spent by the manufacturer in order to define the exact set of conditions for which a given type of system will be required to operate. This requires knowledge of heat absorption rates, waterwall tube inside-film coefficients, and design tolerances required for varying modes of unit operation. Typically, the design practice is based upon considering both the highest mean-wall and outside crown tube metal temperatures when selecting materials. Maximum mean-wall tube metal temperatures are used with ASME design rules and allowable stress limits to establish minimum tube wall thickness; outside crown metal temperatures are used to ensure proper materials selection based on oxidation limits established by each individual company. Once a tubing material and overall furnace wall configuration are established, additional evaluation is made of combined mechanical, thermal, and cyclic loadings, if applicable, as specified by utility companies. The design criteria can be based on the rationale of Section III and Division 2 of Section VIII of the *ASME Boiler and Pressure Vessel Code.*

Local Thermal-Hydraulic Conditions

Local flow pattern obstructions can cause low-flow nodes immediately downstream of the obstruction without substantially altering the total flow through the tube [9]. Local conditions that exacerbate deposition are listed in Table 4-1. These lead to a cascading set of problems that ultimately result in waterside BTF.

Table 4-1
Local Tube Conditions Lead to Initial Deposits

Locations where the water/fluid flow adjacent to the tube wall is disrupted

- Welded joints such as:
  - Joints with backing rings
  - Poor repair welds such as pad welds, “canoe” pieces, or window welds
  - Poor weld overlay (penetrating to the inside surface)
- Locations with existing internal deposits caused by:
  - A deposition mechanism
  - Deposits left from improper chemical cleaning
  - Locally high heat flux
  - Locally high steam quality
- Geometric features
  - Bends around burners or openings
  - Sharp changes of direction (such as the nose of the furnace)
  - Tubes bending from lower headers and drums

Locations with a high heat flux

Locations where boiling first initiates

Locations with thermal-hydraulic flow disruptions

- Locations with local very high steam quality
- Locations with horizontal or inclined tubing healed from above or below

Localized overheating of the tube (fireside conditions)

- Flame impingement
- Burner misalignment
- Operating conditions such as overfiring or underfiring, gas channeling, or inadequate circulation rates
- Drastic change in fuel source, such as higher BTU value coal, dual firing with gas, changeover to oil or gas firing where heat flux increases

The process of flow disruption, formation of deposits, and concentration of chemicals or contaminants provides a means by which concentrated liquids can stay in contact with a susceptible tube surface for a sufficient length of time for corrosion to occur. It is this basic process by which three of the most pervasive boiler tube failure mechanisms (hydrogen damage, caustic gouging, and acid phosphate corrosion) develop.

Design Considerations to Reduce Boiler Tube Failures for Water-Touched Tubes

The potential design enhancements that can be used to reduce boiler tube failure are addressed here in terms of failure mechanisms.

Graphitization

Graphitization refers to the spontaneous thermal conversion of the iron carbide constituent of steel to free carbon (graphite) and pure iron [9–11]. This is a time/temperature phenomenon that typically occurs in a temperature range of 800–1200°F (427–649°C). The time required for graphitization to occur decreases with increasing metal temperature. Failures due to graphitization in welded steels result from the formation of continuous chains of graphite that preferentially align along the low-temperature edge of the heat-affected zone in the base metal. These continuous chains or surfaces of graphite represent a brittle plane through which cracks may readily propagate. Carbon steel and alloy steel containing 0.5% molybdenum can be affected. Failures by graphitization have caused substantial damage. The critical factors leading to potential failure resulting from graphitization are the use of a susceptible material, welding of susceptible material, and exposure of the weldment to temperatures above the range for a prolonged period.

Avoiding prolonged exposure of welded metal to the temperature range over which graphitization occurs is the best method of eliminating graphitization in suspect material. Specifying non-susceptible material in the design phase can eliminate failures by graphitization.

Corrosion Fatigue

Corrosion fatigue occurs by the combined actions of cycling loading and a corrosive environment [41,42]. The primary occurrence is in waterwall and economizer tubing. Failures are initiated at the inside surface at multiple initiation sites, which can be associated with pits or other surface discontinuities. Damage at the outside tube surface can appear as a pinhole, a thick-edge crack that is usually axial but may be circumferential, or a thick-edge section "blow-out." Failures are nearly always associated with tube attachments or other locations where significant constraint stresses develop. Typical generic failure locations are shown in Figures 4-2 and 4-3 for tangential fired and wall-fired boiler, respectively. A list of 24 potential sites is presented in Table 4-2. An EPRI study indicates that corrosion fatigue is a synergistic reaction between a number of independent factors that are grouped, including stresses and environments. Solutions to the problem would involve minimizing the impact of one or more of these major factors. Corrosion fatigue has shown sensitivity to the stress at the specific site. The most successful methods to eliminate corrosion fatigue have been a redesign of the local site to reduce the level of stress.

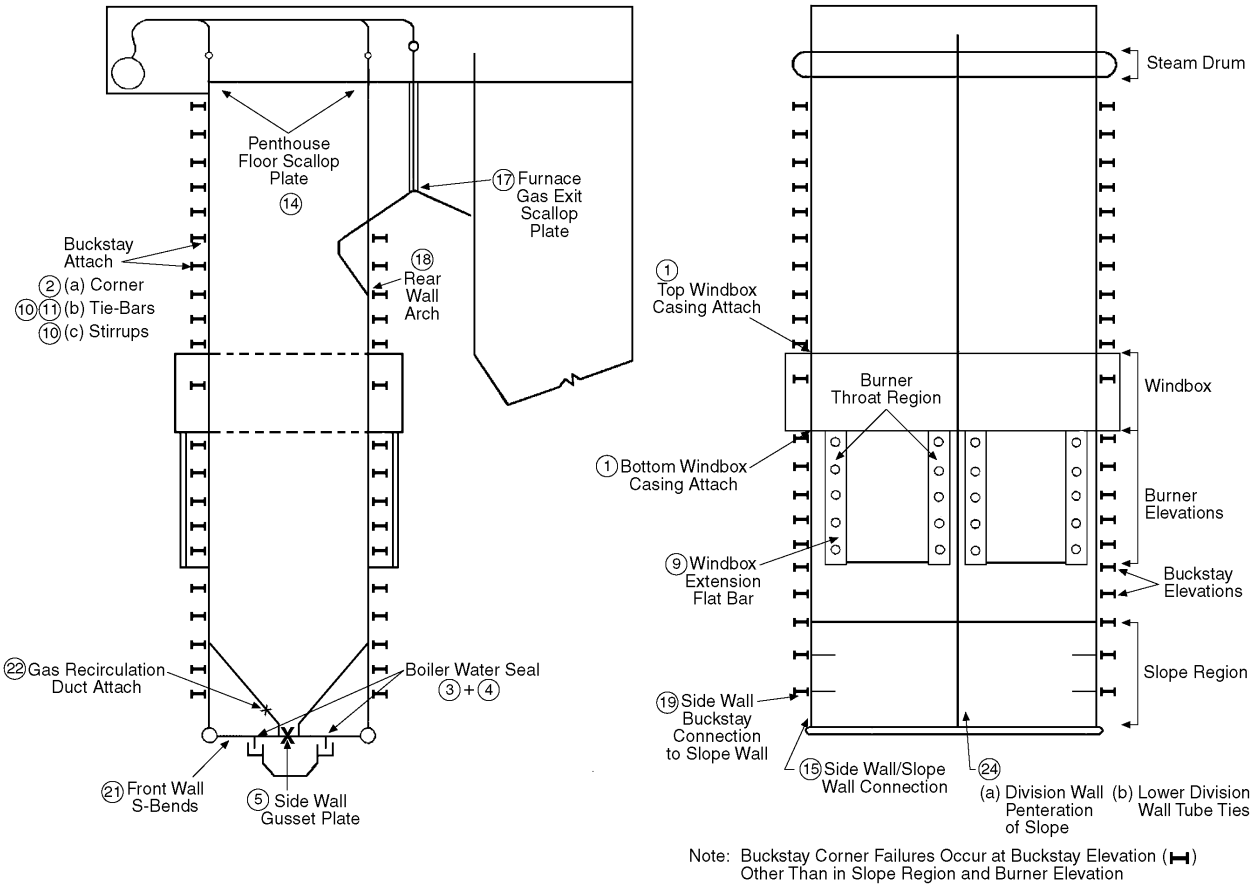

Figure 4-2
Typical Corrosion Fatigue Tube Failure Locations (Tangentially Fired Radiant Boiler)

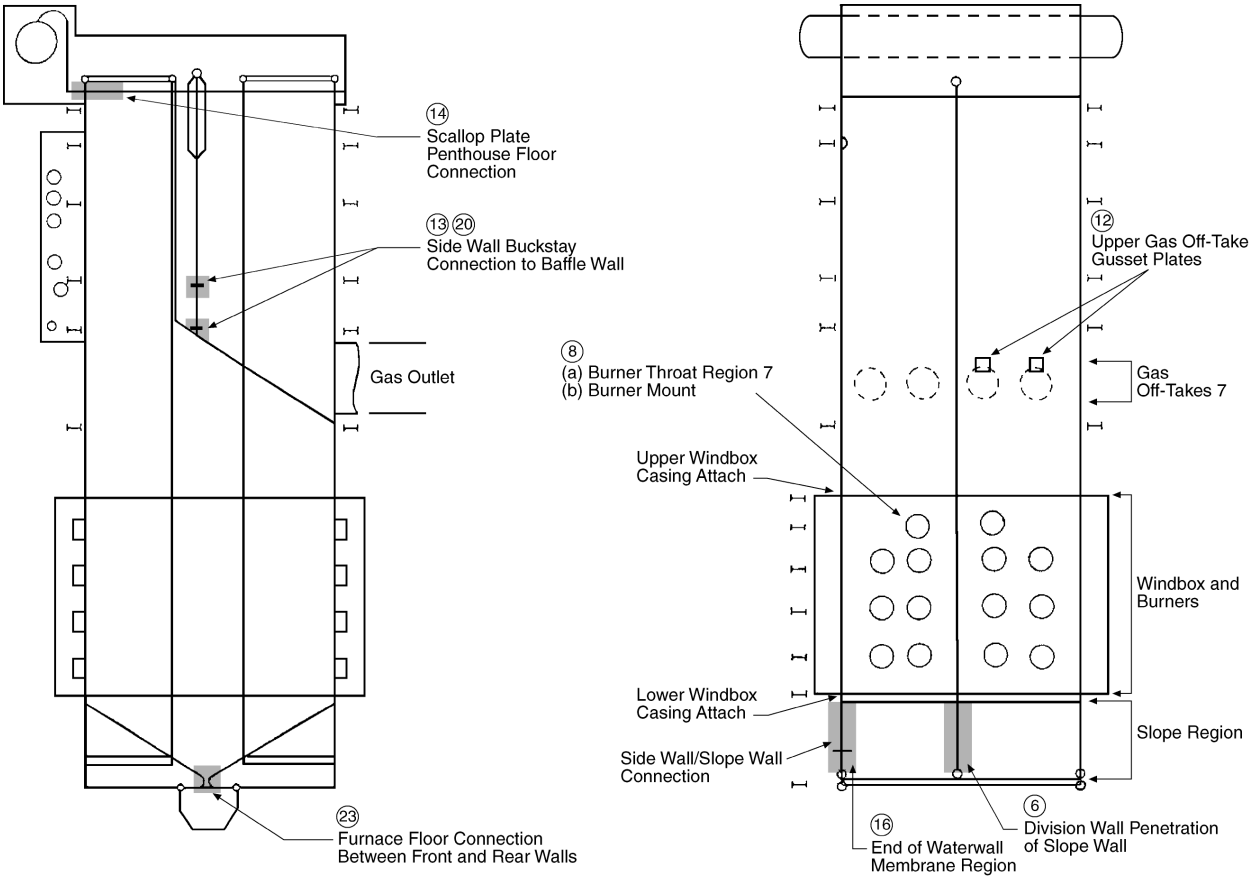

Figure 4-3
Typical Corrosion Fatigue Tube Failure Locations (Front/Rear Fired Radiant Boiler)

Table 4-2
Failure Site Listing With Descriptions, Stress Ranking, and Potential Modifications

Location*	Description	Rank	Applied Modification
1. Windbox casing	(a) Continuous scallop plate: primarily corner tubes affected (b) Filler bars	B B	No modification derived. Replace cast filler bars with plate-formed filler bars.
2. Buckstay corners**	(a) Rigid corner scallop plate connected to buckstay (b) Lug mounted tie-bar connected to tubes at corner (c) Tangent/membrane wall with filler bar connections	B A D	Remove or relieve rigid corner. Same as for case (a). Remove filler bar.
3. Boiler ash hopper seal plate	Continuous scallop plate	B	Change to U-bolt arrangement.

Table 4-2 (cont.)
Failure Site Listing With Descriptions, Stress Ranking, and Potential Modifications

Location*	Description	Rank	Applied Modification
4. Boiler seal heat shield (slag screen)	(a) Continuous scallop plate (b) 6–8 tube tangential bar	B C	Short tangent bar (3–4 tubes) or a U-bolt arrangement. Same as for case (a).
5. Side wall gusset plate	Triangular plate between redirected tubes	A	Change to peg membrane.
6. Division wall penetration of slope wall	(a) Refractory box rigidly connected at the top and bottom (b) Continuous scallop plate	D B	Remove rigid connections. Use refractory box without rigid connections.
7. Burner throat/gas off-take tube ties	(a) Short bars welded between redirected tangent tubes at major waterwall openings (b) Short bars welded between tubes in tangent rube wall	C B	Replace tube ties with membrane bar. Weld bar on hot side to restore neutral bending axis to geometric axis of tube.
8. Burner barrel mounts	Direct connection from burner barrel to waterwall	C	Use mounting plate between burner and wall. Increase the number of attachment lugs.
9. Windbox extension vertical seal	Windbox extension duct welded directly to vertical flat bar (flat bar is on outside of windbox but could also be on inside)	D	Install expansion plate between windbox casing and flat bar; remove flat bar on inside.
10. Buckstay connections to waterwalls	(a) Continuous scallop tie-bar (b) Continuous tangent bar tack welded to tube -Membrane wall -Tangent tube wall	C D B	Use stirrups or lugs on membrane walls. Tack weld to alternate tubes on tangent tube wall. Same as for case (a). Same as for case (a).
11. Scallop tie-bars	(a) Tangent tube waterwalls (b) Most failures at corners or associated with abnormally high loads	D	Address source of stress. Remove weld from every other tube.

Table 4-2 (cont.)
Failure Site Listing With Descriptions, Stress Ranking, and Potential Modifications

Location*	Description	Rank	Applied Modification
12. Miscellaneous waterwall penetration gusset plates**	(a) Sootblower penetrations (b) Burner throat and gas off-takes	D C	Replace with peg membrane.
13. Miscellaneous fuller bar attachments**	(a) Windbox strut attachment (b) Side wall buckstay/baffle wall connection (c) Slope wall support I-beam at side wall	D D B	Replace solid filler bars with formed plate filler bars.
14. Penthouse floor attachments	(a) Continuous scallop plate (b) Problems most common in corners (c) More serious if connecting rubes carrying different media	D B	No modification determined.
15. Side wall/slope wall seal	a) Scallop bar b) Rod welded between tubes	D B	Replace with refractory box.
16. End of membrane	More serious adjacent to redirected tube	A	Cut back membrane.
17. Furnace gas exit scallop plate	Continuous scallop plate (adjacent to redirected tubes)	C	Move scallop plate further from redirected tubes and cover with refractory.
18. Rear waterwall arch	Continuous scallop plate (adjacent to separation of hanger tubes)	C	Cut scallop bar at intervals to make discontinuous.
19. Side wall buckstay connection to slope wall	(a) Tangent bar tack welded to tubes (b) Scallop bar tack welded on alternate sides of bar	C D	Replace with scallop bar. Evaluate necessity of attachment. Same as for case (a).

Table 4-2 (cont.)
Failure Site Listing With Descriptions, Stress Ranking, and Potential Modifications

Location*	Description	Rank	Applied Modification
20. Side wall buckstay connection to baffle wall	Flat bar connection to baffle wall seal welded with filler bars at side wall (lowest connection affected)	C	No modification derived.
21. Lower front/rear waterwall S-bend	Immediately downstream of mud drums, with locating scallop bars between tubes	B	Remove scallop bars and replace affected bends.
22. Gas recirculation duct scallop plate attachment	Continuous scallop bar	D	No modification derived.
23. Furnace floor connection between nose tubes	(a) Direct connection between nose tubes in opposite walls (b) Filler bars used (c) Natural gas-fired boiler only	C	Replace solid filler bars with formed plate filler bars. No other modification derived.
24. Division wall tube ties	First set of tube ties above slope wall	D	No modification derived.

*Numbers refer to illustrations in Figures 4-2 and 4-3.
** Listed stress rank applies to locations within the combustion or radiant sections of the boiler.

Stress Factor

The major factors influencing corrosion fatigue in boiler waterwall tubes are the stresses. The major sources are local stresses induced by the following:

- Boiler pressure
- The through-wall thermal gradient created by heating the tube on one side
- Constraint of thermal expansion in the tube
- Static mechanical loads from structural attachments on the tubing

The corrosion fatigue induced boiler tube failures are very severe after the period when the nuclear units are placed in operation and the fossil units are placed in two-shift operation. Evaluation of the stress state may be complicated by the fact the stresses can be created by the local design, system design, or a combination of both. Among the four sources of stress, boiler pressure is reasonably constant throughout the waterwall and, although critical to the total stress, is not considered a component that can be altered to avoid corrosion fatigue. Similarly, many of the factors associated with the thermal gradient such as heat flux, inside diameter (ID) film coefficient, and fluid temperatures are difficult to alter as a potential solution. These factors focus attention on the thermal constraint and static mechanical loads, either locally or globally

applied, as potential sources of a solution to reduce total stress. The thermal gradient may provide a further avenue to reduce stress in specific circumstances.

Potential solutions should try to increase the flexibility of the attachment; it may be possible to remove the attachment altogether. Insulation of the attachment, or affected area, may be of benefit under circumstances of large thermal gradients. Although the cold side of the waterwall is generally insulated, particular cases such as windbox attachments could benefit from insulation to reduce the thermal gradient through the tube. In more complex cases, field testing and a more detailed analysis (possibly a finite element stress analysis) may be required to identify the sources of load.

Residual strain has not been generally accepted as an important factor in promoting corrosion fatigue failure. However, if the attachment and the weld are relatively large—that is, if the weld size is as large as the tube thickness—equal concern should also be given to the role of fabrication residual strain in promoting much of this waterside cracking.

For each of the following sites, the primary consideration is given to the design features based on the corrective actions previously attempted. Description of the applied stress is qualitative and to some extent speculative because the stresses have not been analytically determined.

Filler Bars

Filler bars (or blocks) are solid triangular blocks welded between tubes to provide a surface for waterwall attachments and to distribute the load from the attachments. This arrangement is commonly used at joints required to seal the furnace or ducting (for example, windbox or for miscellaneous structural attachments). The filler bars act as heat sinks on the cold side of the tube, increasing the through-tube thermal gradient. In conjunction with related attachments, filler bars can also impose constraints to thermal expansion, particularly at corners, and may be subject to unanticipated mechanical loads. Generally, the attachment is directly welded to the filler bar, thus increasing further the thermal gradient across the tube. Examples of typical filler block attachments and potential solutions are provided in Figure 4-4.

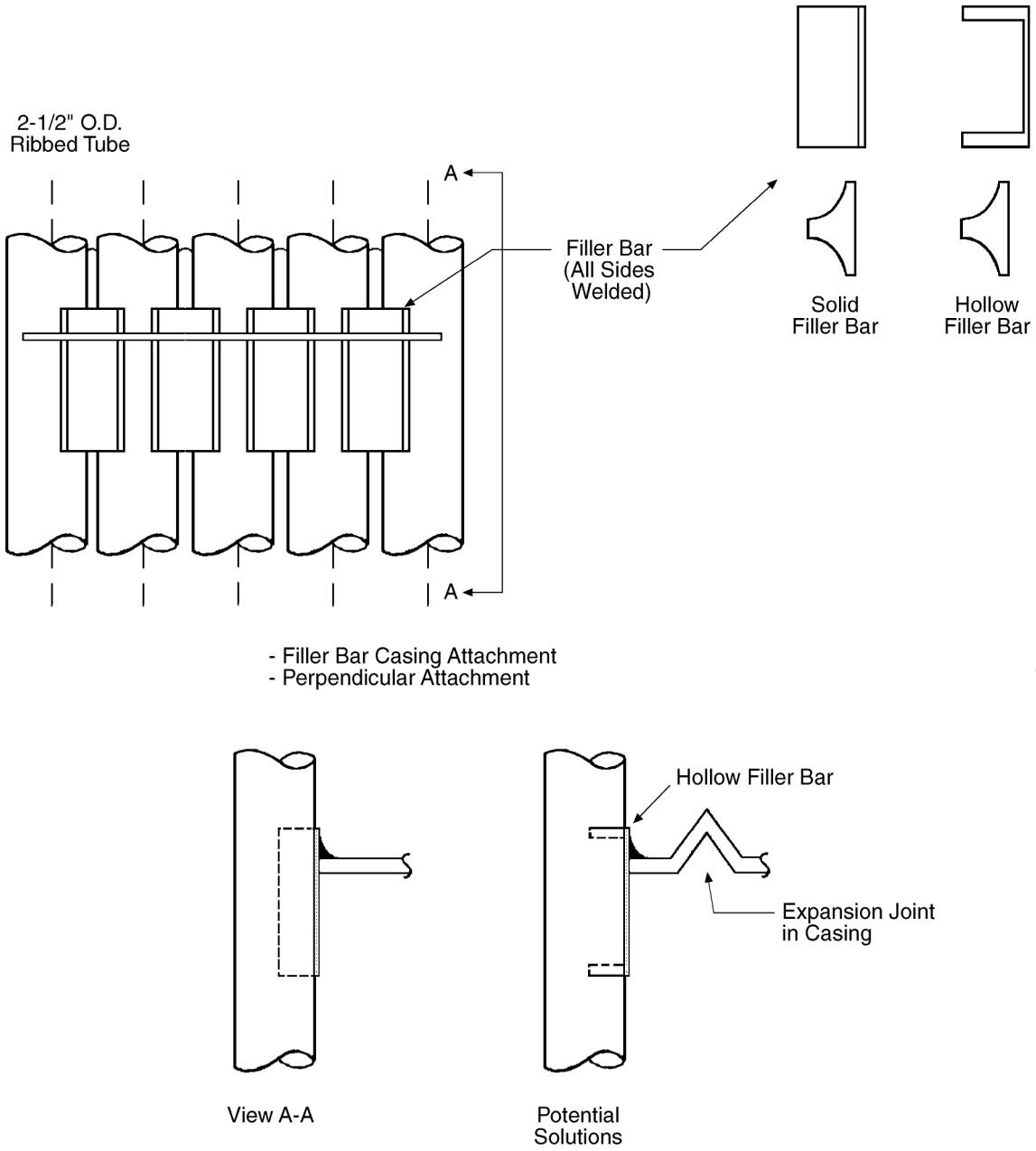

Figure 4-4
Filler Bar Attachments and Potential Actions to Relieve Stress

It has been suggested that the solid filler blocks be replaced by plate stampings, illustrated in Figure 4-4, effectively forming hollow filler bars. The change should reduce the thermal gradient through the tube. This approach was applied in two of the surveyed boilers, but there is insufficient data to evaluate the effectiveness of the modification. Insulation of the attachment, if not already applied, may have an impact in marginal cases.

Alleviating the unanticipated constraint or mechanical loads is more difficult and requires assessment of the source and magnitude of the load. At sealed joints (for example, windbox

casings and sidewall slope wall joints), it may be possible to relieve a certain amount of constraint by installing an expansion joint parallel to the seal connection (see Figure 4-4). For structural attachments, either a larger base to distribute the load may be required or the filler bars can be replaced by a tie-bar attached to the waterwall by finger lugs (see Figure 4-5). In other cases, it may be possible to remove the filler bars without a serious impact. The implications of each modification must be assessed to ensure adequate support of the mechanical loads.

Scallop Bars (Long and Short)

Scallop bars are similar to filler bars in that they have been used in most cases to seal an attachment (for example, a windbox casing) to space tubes as in tangent tube boilers and for other miscellaneous attachments. Scallop bars can increase the load on a tube by confining thermal expansion, particularly at corners, increasing the thermal gradient by acting as a heat sink; they may also be subject to unanticipated loads. Examples of typical scallop bar attachments and potential solutions are provided in Figure 4-5. An example of a short scallop bar arrangement is provided in Figure 4-6.

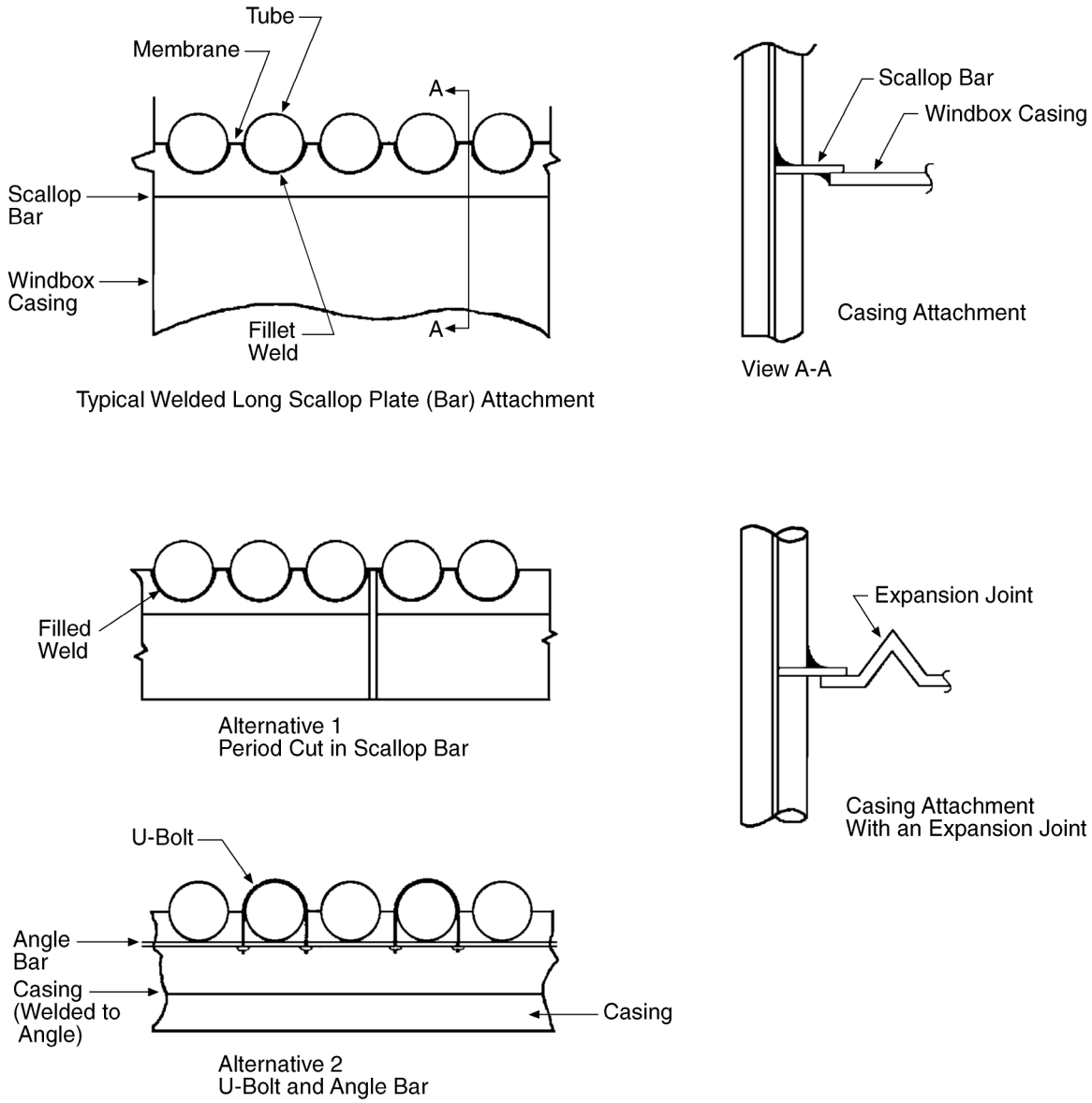

Figure 4-5
Long Scallop Plate (Bar) Attachments and Potential Actions to Relieve Stress

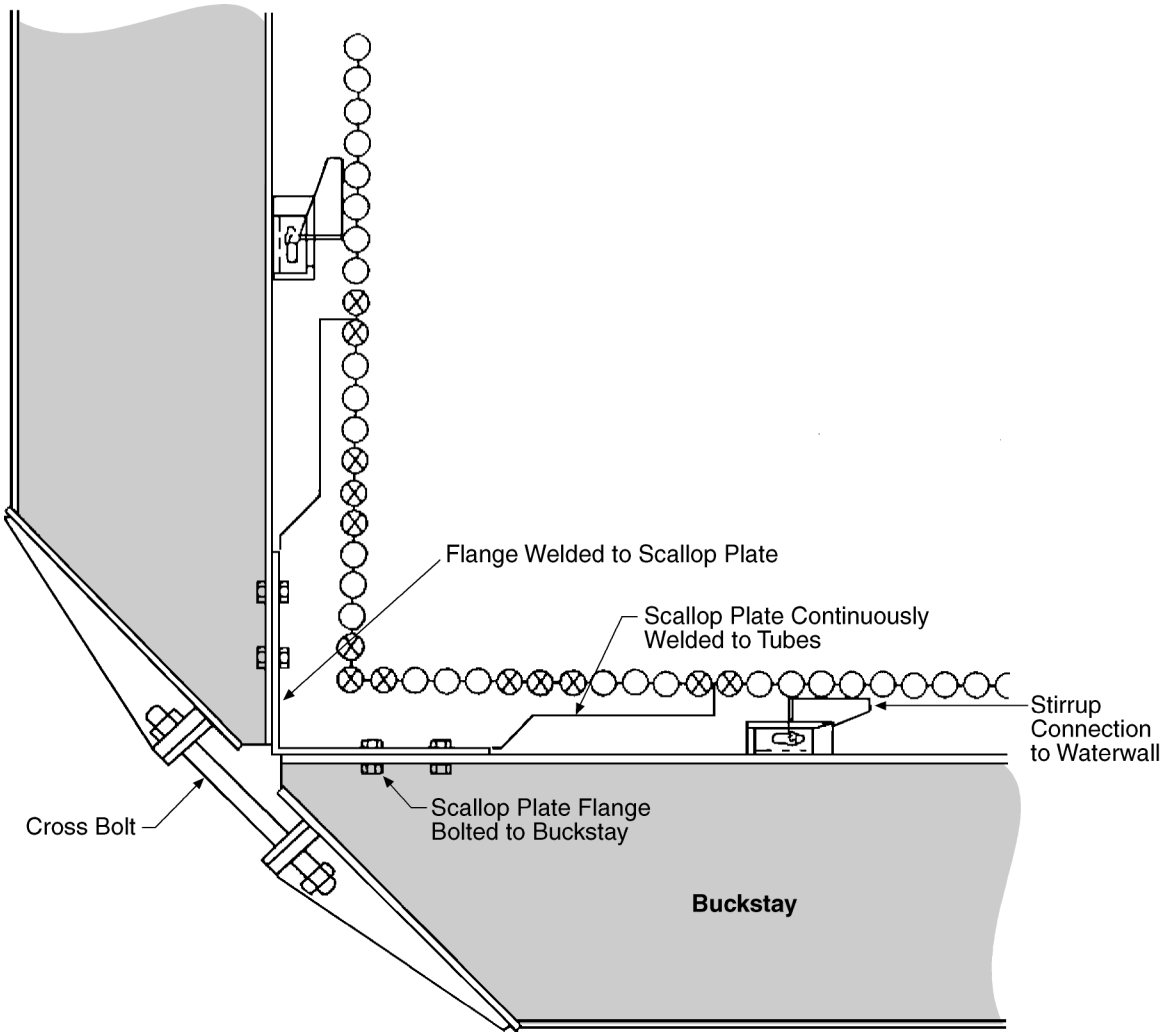

Figure 4-6
Short Scallop Plate (Bar) Attachments

As with filler bars, each case should be independently assessed when deriving a solution. Where a seal is not necessary, it may be possible to relieve a certain amount of the constraint by tack welding the bar to the membrane between the tube or the crown of the tube in the case of tangent tube boilers. Removing the direct attachment would also serve to reduce the thermal gradient through the tube. Insulation of the area would have a similar effect. The constraint can also be reduced by cutting the scallop bar at regular intervals, or it may be possible to make use of non-welded attachments. One of the suggestions in Volume I for the boiler seal attachment is to use a U-bolt and angle bar arrangement in place of the scallop bar (see Figure 4-5). At many seal joints, unanticipated loads can increase stress in the tube. The installation of an expansion joint parallel to the scallop bar joint has been successful at windbox corners and division wall penetrations of the slope wall. The assessment may also indicate the scallop bars can be removed altogether.

Gusset Plates

Gusset plates are used to fill gaps in the tube wall where the tubes have been redirected, usually at waterwall penetrations (for example, burners or sootblowers), and often do not have a cold side attachment. One significant gusset plate location is at the lower side waterwall in boilers where the sidewall tubing originates at the front and rear waterwall headers. In such a design, the side waterwall tubing runs horizontally from the header and is redirected vertically at the center of the side wall. The gusset plate is welded at the bottom of the waterwall between tubes originating from opposing headers (see Figure 4-7).

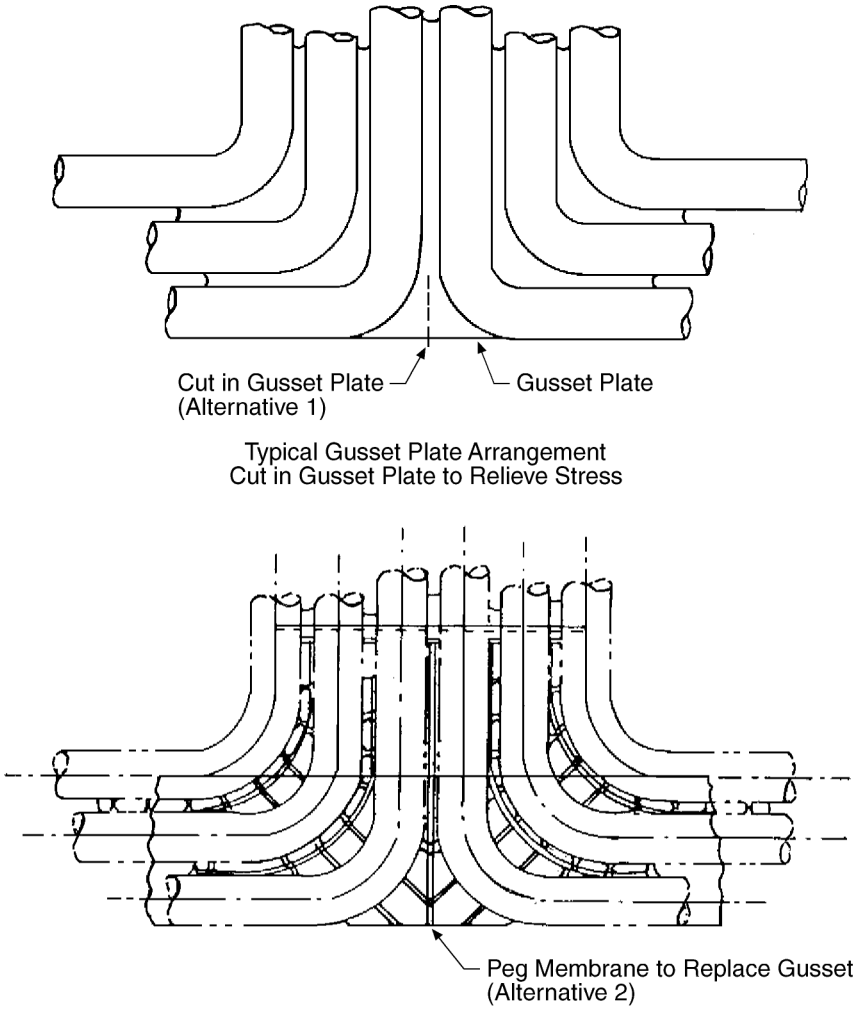

Figure 4-7
Gusset Plate Arrangements and Potential Actions to Relieve Stress

Corrosion fatigue problems are usually associated with constraint of thermal expansion. Problems have been eliminated by cutting the gusset plate down the center or replacing the gusset plate with a peg membrane. The cold side would be packed with refractory to preserve the furnace seal. Figure 4-7 provides examples of gusset plate attachments and possible solutions. Further examples are contained in EPRI report CS-4778 [1].

Tangent Plates (Bars)

Tangent plates or bars are attachments consisting of a flat plate or bar that is tack welded tangentially to the crown of the tubes (also referred to as a tie-bar). Corrosion fatigue is found at this type of attachment only under specific loading conditions. Examples of tangent bars having corrosion fatigue problems would include buckstay tie-bars and the slag screen-mounting bracket in specific boilers. In many cases, excessive constraint or mechanical loads result in breaking of the tack weld or possibly an OD-initiated fatigue problem. These circumstances make the tangent bar attachment a marginal corrosion fatigue location; corrosion fatigue is found at locations where the load is marginally larger than the non-attachment area loads. The most effective alternative in such cases is to devise a non-welded attachment (for example, using finger lugs for tie-bars as opposed to a direct tack weld). Examples of typical tangent bar attachments and potential solutions are provided in Figure 4-8.

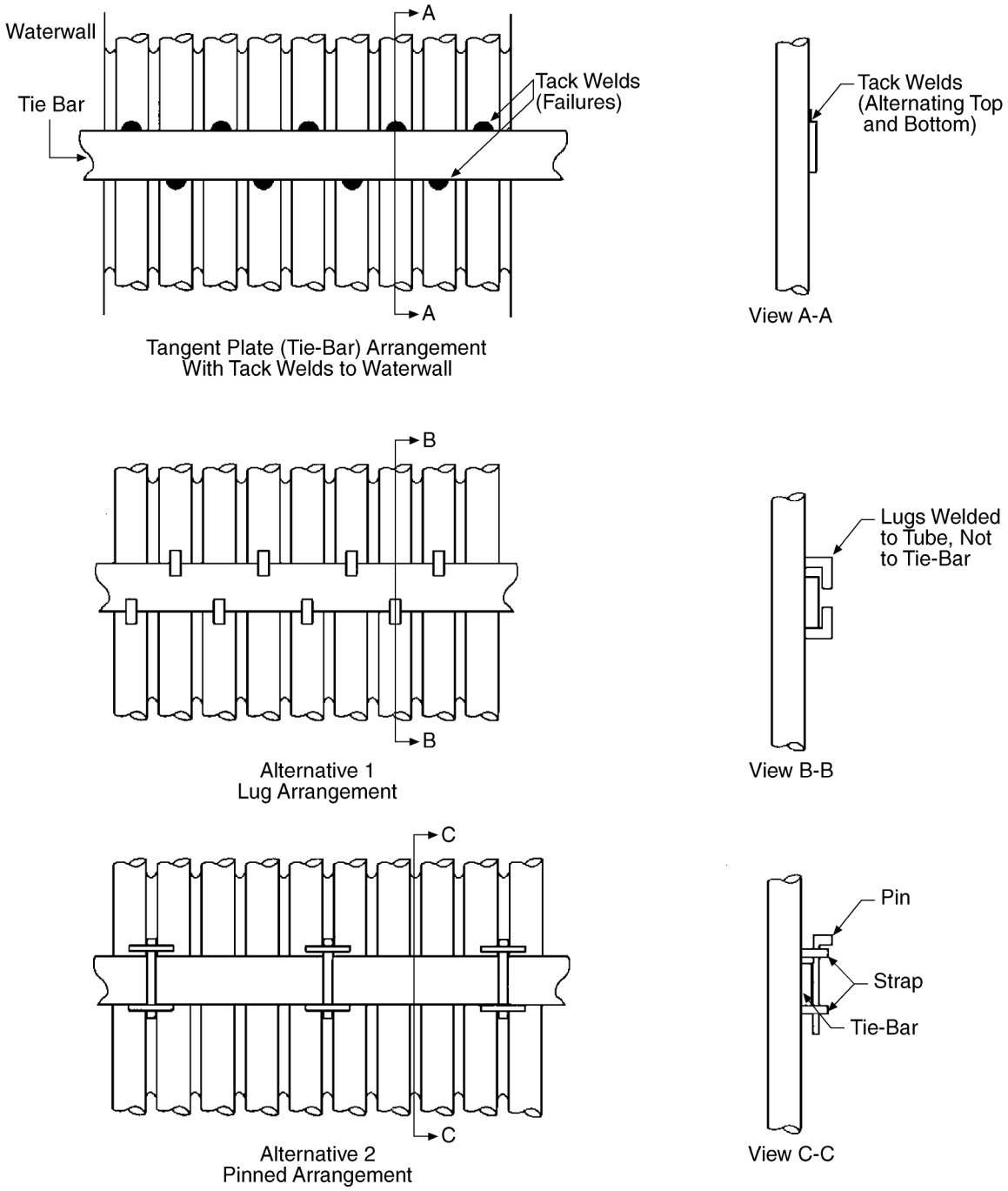

Figure 4-8
Tangent Plate Arrangements and Potential Action to Relieve Stress

The most serious problems have been at locations where a significant thermal gradient can develop. The slag screen attachment example is an example of a non-cooled fireside attachment. Reducing the width and thickness of the bar has been successful in reducing the impact of corrosion fatigue. Again, a non-welded alternative might be possible at this location. For cold-side attachments with a significant thermal gradient, insulating the attachment area can also aid in reducing the local stress.

Rods are bar stock welded between tubes, usually of slightly different geometry, to seal the furnace. Examples are in areas around burners, at side wall/slope wall joints, or the division wall penetration of the slope wall (see Figure 4-9). Generally, the thermal gradient and mechanical loads are not a problem. High stresses are created by the constraint of expansion in the tube causing unusual bending stresses. Solutions need to be assessed on an individual basis. In some cases it might be possible to use a peg membrane or to put a plate across the cold side of the tubes requiring the seal. This type of approach was used as an alternative at the side wall/slope wall joint where an expansion box can be used in place of rods and a scallop bar and thus avoiding the concentration of stress at the rods and scallop bars. Location-specific potential solutions are described in EPRI report CS-4778 [1].

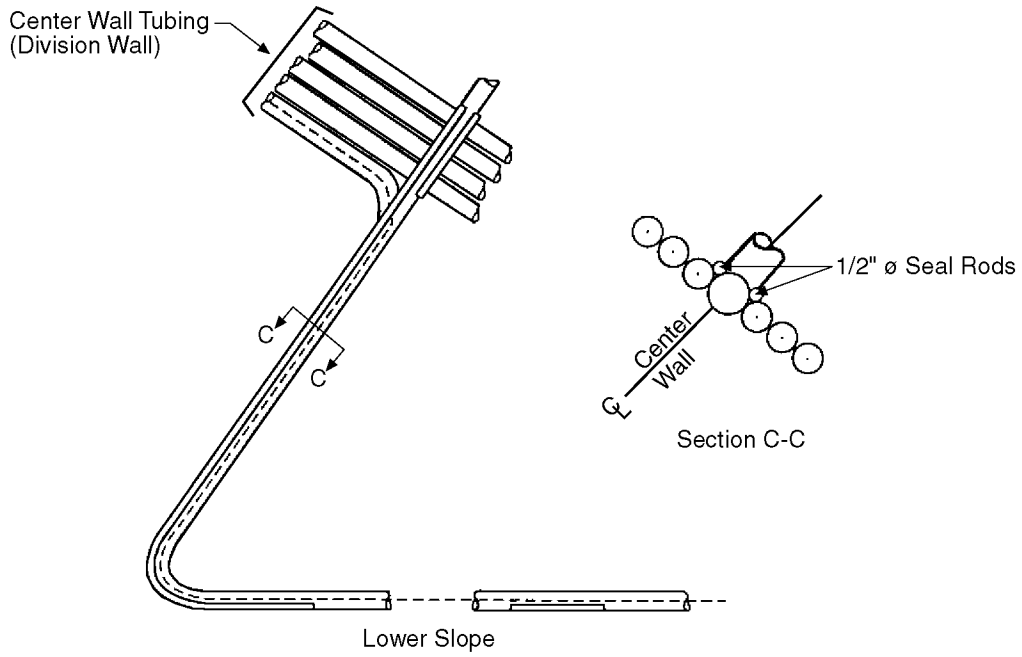

Figure 4-9
Use of Rods to Seal Furnace at the Center Wall (Division Wall) Penetration of the Lower Slope Wall

Ties refer to tube ties used to hold tubes in position where there is no membrane, such as in burner opening tube arrangements. Lugs are used to support attachments of various types, including burners. Corrosion fatigue becomes a problem where the ties and lugs concentrate either constraint loads or excessive mechanical loads. Similar attachments not having problems tend to distribute the load over a larger area. For burner mounts, either larger lugs or more lugs can be used. The same can be applied to tube ties with careful consideration of the constraint effects described for rods. A non-welded arrangement should provide a better option. Similar to the description of rods, location-specific solution alternatives are provided in EPRI report CS-4778 [1].

End of Membrane

Corrosion fatigue at the end of a membrane has been a problem in select circumstances, usually associated with the constraint load between tubes of a different geometry or an adjacent wall of different geometry. Mechanical fatigue causing OD-initiated failures can also be a problem at similar locations, but the solutions are the same. Such locations would include the end of the membrane prior to a redirection of tubing at the inlet for gas recirculation. The thermal gradient is generally not a problem unless there is connection between tubes carrying fluids of different temperature. Tube failures have been mitigated by cutting back the membrane. In one boiler examined, a peg membrane (see Figure 4-6) had been installed for a considerable distance from the tube bends, allowing slight bending in the tube to absorb the constraint stress. An evaluation of the length of the cutback or other solution is required and depends on the specific application.

Environment for Corrosion Fatigue Mechanism

The environment is considered a secondary parameter within the corrosion fatigue process. However, actions addressing secondary parameters can make a difference in marginal cases. Modification of boiler water chemistry control can reduce the severity of a corrosion fatigue problem but does not prevent tube failures if sufficient stress is present. The major parameters are dissolved oxygen and pH. The impact of dissolved oxygen during on-line periods can be minimized if deaeration and chemical scavenging in the feedwater systems are properly maintained. The field test program has shown that the present technology is generally adequate to maintain accepted industry standards, less than 5 ppb at the economizer inlet; there are presently no standards for boiler water dissolved oxygen.

Oxygen contamination during starts and off-line periods is most critical for cold boiler events; the field test results indicate that minimal oxygen contamination of the boiler water occurs if there is pressure in the boiler during off-line and startup periods. The effect of oxygen on a cold boiler can be reduced by keeping a nitrogen blank on the waterwall and steam drum and treating the water in the boiler with hydrazine. It is equally important to treat the feedwater during the cold boiler start or prestart in the event the boiler was drained and needs to be refilled. Some units have the ability to draw pretreated water from a second on-line boiler or may be able to operate the deaerator prior to and during the start with auxiliary steam. These activities are in addition to hydrazine treatment.

Boiler water pH is a second major environmental parameter that influences corrosion fatigue in waterwall tubing. The field test program and industry experience indicate that a variety of factors can alter pH (for example, phosphate hideout and return, acid-forming contamination from condenser tube leaks, or water treatment plant acid reagent breakthrough). Phosphate hideout and return can be important in boilers using a coordinated or congruent phosphate treatment to control boiler water alkalinity. At the prescribed concentrations, phosphates can precipitate at high loads and pressures. When pressure is lowered (for example, low load operation or shutdown), acid-forming phosphates can redissolve (phosphate return), causing a depression in pH.

A monitoring program might be required to identify the cause(s) of the instability and to correct the problem. In addition, strict quality control guidelines with excursion response protocols must be developed and enforced to ensure that guidelines are maintained consistently.

There is also concern over the ingress of solids into the boiler. Although solids may not directly affect pH, preferential deposition can occur on the inside surface of the waterwall tubing, particularly in the high-heat flux zones of the furnace. High deposition makes the boiler sensitive to short-term pH excursions, possibly resulting in under-deposit corrosion and local environments, which can exacerbate the development of corrosion fatigue damage.

Solid deposition also requires periodic chemical cleaning of the boiler to ensure proper heat transfer to the fluid, avoiding overheating of the waterwall tubes. The use of hydrochloric acid as the cleaning solution has been shown to adversely influence corrosion fatigue. Low pH cleaning solutions are aggressive to the base metal in addition to dissolving scale and deposited material. In boilers with advanced corrosion fatigue damage, hydrochloric acid chemical cleans will take existing cracks to failure. For less severe damage, there is evidence that hydrochloric acid chemical cleans will blunt the crack tip and thus slow or temporarily arrest corrosion fatigue crack growth.

The field experience further suggests that higher pH cleaning solutions, such as citric acid or ethylenediaminetetraacetic acid (EDTA), have minimal effect. Reducing the number of chemical cleans, switching to a higher pH cleaning solution, or both will improve long-term corrosion fatigue performance. Similar to identifying the sources of pH instability, a monitoring program might be necessary in order to resolve a solid ingress problem.

In the economizer, the environment is somewhat different from the waterwall in that it follows the feedwater rather than the boiler water chemistry. As such, economizer tubing will be exposed to externally generated excursions in dissolved oxygen and pH but avoids the hideout-related problems in the boiler. Importantly, economizer tubing would be exposed to sustained high levels of dissolved oxygen during starts, which the boiler avoids due the dilution effects associated with low levels of feedwater flow in the early stages of the start and the reduced solubility at higher steam drum temperatures. This suggests that corrosion fatigue in economizer tubing may be affected more by oxygen than waterwall tubing. Solid ingress is not considered a serious problem because the low heat fluxes do not encourage deposition.

Treating economizer corrosion fatigue problems by modifying the environment should focus on identifying and eliminating sources of oxygen and pH-modifying species in the feedwater system.

Economizer

Economizers perform a key function in providing high overall boiler thermal efficiency by recovering the low-level energy from the flue gas [4,5,41,42]. The evolution of economizer design for new utility type of units can be divided into three distinct generations:

- Up to the early 1960s, economizers were designed with a continuous fin surface (CFS) economizer with tubing installed in a staggered arrangement. This arrangement not only provided efficient heat recovery characteristics but could also be installed in a relatively small volume of space, thereby reducing overall unit cost.
- By the mid-1960s, the spiral fin surface (SFS) economizers were offered, which were also arranged in a staggered manner. Based on a typical 2 fins/in. (2 fins/25.4 mm) arrangement for coal firing, the SFS design offered more than twice the heat-absorbing surface per linear foot (304.8 mm) and required even less space for installation than the CFS design.
- During the early 1970s, many power plants switched to western and other lower-quality coals for emission and cost reasons. The advantage of using the staggered arrangement with the CFS and SFS economizers became a disadvantage when these designs proved more susceptible to increased plugging and fly ash erosion. Consequently, on units that were currently being proposed to fire these lower-quality coals, the inline bare tube (BT) economizer arrangement became the standard choice. The in-line BT design is the least susceptible to plugging and fouling and is therefore more easily maintained. The disadvantage of the BT design is the large space requirement. For existing units where available space is limited, the spiral fine surface with in-line arrangement may represent a compromise.

Economizers generally located in the convection downpass suffer from problems related to gas velocity, support systems, and thermal transients. Gas velocities can cause erosion when they are too high. This erosion is usually located around the return bends of the sections located close to the back wall. If the erosion is not too severe, baffles can be installed to protect these bends. Caution must be used when installing such baffling, because the flow will be redistributed and, occasionally, worse problems can be created. In severe cases, consideration should be given to redesigning these sections. This can be done by respacing the elements to drop the overall velocity. This redesign can be very intricate because dropping the velocity also changes the effectiveness of the tubing. Thus more linear feet (1 foot = 304.8 mm) of tubing would be required to get the same heat transfer out of these new sections. The superheater and reheater sections of this report include more descriptions about the use of cold-air velocity tests, physical modeling, and computer modeling to address these problems.

Support and thermal transients show up as tube-cracking problems at attachment points, inlet headers, and, in the case of economizers, extended surface attachments. Support problems generally require redesign of clips, brackets, bridge castings, and other support fixtures to allow adequate flexibility in the design.

In the earlier design, the tubes often have axial or radial fins welded to the OD to improve heat transfer. Corrosion fatigue tube failures in horizontal economizer sections are generally associated with the heat-affected zone of the fin weld or occur in tube bends. Given the common use of such fin welds and tube bend, and the rarity of the corrosion fatigue failures, it is likely an abnormal set of conditions existed, promoting corrosion fatigue. Metallurgical investigations of several tube bend failures have attributed the failure to material quality and high residual stress from the manufacture or forming process. This may also be the case in the fin heat affected zone failures [41]. The elimination of failures through modifying the stress state would therefore

emphasize the adherence to proper manufacturing and forming procedures to ensure that residual stresses are avoided or significantly reduced. The environment will also have a different impact on corrosion fatigue in economizer tubing.

Waterwall Fireside Corrosion

Waterwall Fireside Corrosion Mechanisms

The two major causes of corrosion of the waterwall tubes are molten salt or slag-related attack and reducing conditions caused by impingement of incompletely combusted coal particles and flames [38,39,43–47].

Molten Salt and Slag-Related Attack

Slag-related attack takes several forms. Local disruption of the normal oxide film on the wall tubes via intrusion of molten slag can lead to either accelerated oxidation because of removal of the protective oxide by mechanical loss or to oxidation-sulfidation attack from participation of sulfur species in the slag. Alkali sulfates deposited on the waterwalls may react with SO_2 or SO_3 to form pyrosulfates such as $K_2S_2O_7$ and $Na_2S_2O_7$ or possibly complex alkali-iron trisulfates, the latter compounds being formed in thicker deposits after long times at about 900°F (482°C) [14]. The K_2SO_4-$K_2S_2O_7$ system forms a molten salt mixture at 765°F (407°C) when the SO_3 concentration is 150 ppm. The corresponding sodium system can become liquid at 750°F (400°C), but it requires about 2500 ppm SO_3 for this to occur. Thus molten salt attack on the tube metal by $K_2S_2O_7$ is more likely, via:

$$K_2S_2O_7 + 3Fe \rightarrow FeS + Fe_2O_3 + K_2SO_4 \qquad \textbf{Eq. 4-1}$$

By such a mechanism, this pyrosulfate can react aggressively with any protective iron oxide scales on the tubes and lead to accelerated wastage through fluxing of the oxides and attack of the substrate metal. It has been demonstrated in laboratory experiments that high concentrations of SO_3 can be formed catalytically in the stagnant regions beneath deposits, so a similar attack by $Na_2S_2O_7$ may occur when a high-sulfur coal produces combustion gases containing high levels of sulfur oxides. However, the levels of SO_3 present at this location in a boiler burning a typical coal are such that $K_2S_2O_7$ is unlikely to be found at temperatures above about 950°F (510°C), and $Na_2S_2O_7$ only up to about 750°F (400°C).

For English coals, it has been noted that the corrosion rate of the waterwalls increases with coal chlorine content above about 0.2% for boilers with 1450 psi (9996 MPa) steam pressure. Such a relationship is apparently not found in higher pressure units, which have wall tube temperatures up to about 840°F (450°C), compared to 700°F (370°C) for the lower-pressure units. The effect of chlorine is not usually of concern in U.S. boilers because the chlorine level in most coals is generally less than 0.2%. In fact, the major boiler manufacturers limit the permitted chlorine levels to 0.3%.

Reducing Conditions

Reducing atmosphere corrosion might be a result of direct reaction of the waterwall tubes with a substoichiometric gaseous environment containing sulfur, or with deposited sulfur species such as FeS. Partially combusted char containing iron pyrites gives rise to a very localized corrosive environment. Such reducing gaseous conditions occur locally, depending on adjustment of the burners and uniformity of mixing of the fuel and air in the flame. Reducing conditions have two main effects on corrosion. First, they tend to lower the melting temperature of any deposited slag, increasing its ability to dissolve the normal oxide scales on the tubes. Second, the stable gaseous sulfur compounds under these conditions include hydrogen sulfide, which is considerably more corrosive than SO_2, which predominates under oxidizing conditions. Strategies to reduce the production of NO_x by strict control or stratification of the combustion air bring an inherent risk of generating a substoichiometric combustion gas near the burners. Of particular importance is the rapid increase in H_2S and COS and the decrease in SO_2 and SO_3 levels as the equivalence ratio falls below 1.0.

Waterwall Wastage in Low-NO_x Boilers

Waterwall Wastage Mechanisms

The main driving force in reducing NO_x operation is regulatory concerns. Emission regulations require significant reductions in NO_x emissions for utility boilers. The preferred method is using combustion modifications with reduced NO_x formation (that is, low-NO_x burner systems). Such burner systems create reducing zones in the furnace, especially systems with OFA ports. Waterwall wastage has been observed in a significant number of boilers retrofitted with low-NO_x systems that employ OFAs or some other means of external staging. The problem is most severe in supercritical boilers using relatively high-sulfur coals, but subcritical boilers and boilers firing low-sulfur coals are not immune.

An initial informal survey indicated that all units experiencing accelerated wastage were equipped with OFA systems. Most had supercritical steam systems and burned relatively high-sulfur coal. However, at a later time, some stations with subcritical steam systems also reported wastage, and supercritical boilers burning lower-sulfur coal were also found to be vulnerable to waterwall wastage, sometimes at very high rates. These survey data indicate that the correlation with sulfur content is not as good as indicated by the low correlation coefficients. The data do suggest that corrosion rates of subcritical units are lower than those of supercritical units, showing the effect of higher tube temperatures of the latter. Wastage rates observed are typically up to 20 mils/yr (0.5 mm/yr) for subcritical boilers and 40–80 mils/yr (1–2 mm/yr) for supercritical boilers. Studies in a wall-fired supercritical boiler retrofitted with a low-NO_x cell burner (LNCB) system indicated a considerable increase in waterwall wastage.

High wastage rates experienced in boilers retrofitted with low-NO_x /OFA burner systems are not totally caused by the presence of the reducing gaseous species needed to lower NO_x emissions. Reducing environments containing H_2S can produce wastage rates in the range of 4–20 mil/yr (0.1–0.5 mm/yr) for supercritical boilers. However, severe waterwall wastage

(>40 mil/yr, >1 mm/yr) is almost certainly caused by FeS deposits in areas where they are in contact with free oxygen, at least part of the time. Because FeS deposits are not essential for obtaining low-NO_x emissions, it becomes attractive to explore methods to reduce FeS deposits without increasing NO_x emissions. Model studies have shown that this is indeed feasible. EPRI is exploring more in this area.

Laboratory Corrosion Studies

The conventional wisdom was that waterwall corrosion was caused by H_2S in severely substoichiometric flue gas, containing up to 12% CO. However, corrosion rates experienced in the field are much higher than those caused by H_2S at levels (500–1500 ppm) usually found in boilers retrofitted with low-NO_x burner systems. A recent EPRI Laboratory study indicates that iron sulfide deposits are the most likely cause of the accelerated corrosion. The findings in this study indicate the following:

- Results of the tests reveal that severe sulfidation attack occurred when the metal surfaces were covered with FeS-rich ash and exposed to relatively oxidizing combustion gases. Such an attack mode is very different from the mechanism widely accepted for traditional low-NO_x corrosion that involves direct gas-phase attack from H_2S formed from substoichiometric combustion of sulfur-bearing coal.
- The environment existing within the FeS-rich ash on furnace walls exposed to a relatively oxidizing combustion gas was investigated using *in situ* gas analyses. Both oxidizing and reducing species were found to coexist, suggesting that the local chemistry is far from being chemically equilibrated. In comparison, the concentrations of H_2S and COS are relatively low, while the amounts of elemental sulfur and methyl mercaptan are much higher.
- Based on the experimental results, a new corrosion mechanism is proposed to account for the high metal wastage often found in boilers experiencing flame impingement and improper fuel/air mixing or equipped with low-NO_x burners. This mechanism involves condensation of a FeS-rich deposit on the furnace walls resulting from incomplete combustion of pyrite in coal. Depending on the wall locations, the combustion gases can cycle between reducing and oxidizing following the boiler load changes. Furthermore, due to turbulent flow in boilers, the FeS-rich deposit may even be carried beyond the combustion zone by the flue gases and condensed on areas where oxidizing gases are normally present. Once the FeS-rich ash is exposed to oxidizing flue gases, a large amount of reduced sulfur species, including elemental sulfur and methyl mercaptan under certain conditions, can be formed, creating a very sulfidizing environment locally in the ash and on the metal surfaces.
- Using the corrosion data generated from this laboratory study, the following predictive equations were developed, which can be used to estimate the maximum and average corrosion rates of conventional furnace-wall alloys (that is, carbon and low-alloy steels) when covered with FeS-rich ash and exposed to an oxidizing gas.

The Maximum Corrosion Rate:

$$\text{mpy} = 1.81\times10^{4}\times\exp[-10803/(1.987\text{T})]\times\left[(\text{O}_2)^{0.4} - 2.1(\text{CO})^{0.6} + 7.9\right] \quad \textbf{Eq. 4-2}$$

$$\text{mm/yr} = 4.6\times10^{2}\times\exp[-10803/(1.987\text{T})]\times\left[(\text{O}_2)^{0.4} - 2.1(\text{CO})^{0.6} + 7.9\right] \quad \textbf{Eq. 4-3}$$

The Average Corrosion Rate:

$$\text{mpy} = 1.21\times10^{4}\times\exp[-10803/(1.987\text{T})]\times\left[(\text{O}_2)^{0.4} - 2.1(\text{CO})^{0.6} + 7.9\right] \quad \textbf{Eq. 4-4}$$

$$\text{mm/yr} = 3.07\times10^{2}\times\exp[-10803/(1.987\text{T})]\times\left[(\text{O}_2)^{0.4} - 2.1(\text{CO})^{0.6} + 7.9\right] \quad \textbf{Eq. 4-5}$$

where

mpy = mils per years

mm/yr = millimeter per year

T = metal temperature in Kelvin

O_2 = partial pressure of O_2

CO = partial pressure of CO

The partial pressure of O_2 represents the driving force for the formation of reduced sulfur species, while the partial pressure of CO acts as the resistance. These newly proposed corrosion-predictive equations are specific to the conditions involving both FeS-rich ash and a mixed gas containing oxygen or a relatively high CO_2/CO ratio. Combining the above equations with those previously developed by Kung [7] for traditional low-NO_x corrosion (that is, attack directly from H_2S in the gas phase), the corrosion rates of entire lower furnace walls can be estimated based on boiler operating variables, such as the metal temperature, coal chemistry, and gas compositions.

Cyclone Boilers

Modeling and short-term field trials in cyclone furnaces have indicated that the possibility of excessive waterwall wastage is likely to be considerably less than in PC-fired boilers. This makes the use of OFA in cyclone boilers an attractive and relatively low-cost method to substantially reduce NO_x emission. The cyclone barrel walls and the lower furnace are lined with refractory. It is important to keep the refractory lining in good repair and use stainless steel studs when considering the use of OFA. Modeling shows that there may be isolated areas above the

refractory liner, which may be in contact with flue gas containing medium level of H_2S, but at greatly reduced CO levels (<4%). This may cause 4–15 mils/yr (0.1–0.38 mm/yr) corrosion in these areas. Relatively inexpensive flame spray coatings should eliminate this wastage, if needed. Short-term field tests have indicated that the gas compositions measured in the lower furnace contained considerably less H_2S than predicted by the model. The potential of FeS deposition and associated high wastage rates is greatly reduced in cyclone boilers because only about 20% of fly ash leaves the furnace. FeS deposits on the refractory coated part of the waterwall are not expected to be harmful.

Combustion Modeling

Combustion fluid dynamic modeling simulates all reactions occurring during the combustion process in a boiler and can predict flue gas temperature and composition, coal and ash particle trajectories, coal and FeS deposition, furnace temperature, heat fluxes, and other features that may influence waterwall corrosion. The models are also used to predict NO_x emissions and the carbon content in the fly ash. They can be used to study methods to reduce waterwall corrosion. These predictions can be compared with known areas of high waterwall wastage to determine if there are any correlations. Many case studies have been performed or are underway to learn more about these techniques.

Measures to Reduce Boiler Tube Failure Due to Waterwall Fireside Corrosion

The drawback of the material solutions is the cost and difficulty to repair. Combustion modification with low-NO_x burners using separate OFA in conjunction with high sulfur coal can cause major waterwall wastage problems due to fireside corrosion. The wastage is also related to the tube surface temperature (that is, supercritical units have experienced substantial higher wastage rate than subcritical units). Two mechanisms can cause the corrosion (that is, H_2S and FeS attack). The H_2S attack occurs under the reducing condition, which is induced by low-NO_x system design and flame impingement. The FeS attack is a newer variant of the waterwall corrosion mechanism and is currently being investigated by EPRI. This mechanism can produce substantially higher wastage rate than the H_2S attack. The corrosion occurs in areas where tubing is in contact with free oxygen (at least part of the time), high CO, unburned carbon deposits, and FeS. Combustion tuning to reduce the CO and unburned carbon deposit should reduce the damage. The aggressive sootblowing may also reduce the problem if the deposit can be timely removed. Combustion computer modeling can pinpoint areas that can have high wastage problems. Measures that can be used to improve boiler availability can be summarized in the following two categories:

- Combustion improvement
- Material solutions

Combustion Improvement

As a coal particle exits the burner nozzle, its surface temperature increases due to heat transfer from the furnace gases and adjacent burning particles. As this temperature continues to increase,

the moisture is vaporized and the volatile matter is released. This volatile matter ignites and combusts almost instantaneously, which further raises the temperature of the particle. The carbon (char) particle is then consumed at high temperatures, leaving only the chemical ash content and a small amount of unburned carbon. Complete combustion in a designated fashion is essential for the boiler operation. Improved combustion can achieve optimum NO_x generation, boiler efficiency, unburned carbon in ash, and reliability. The combustion assessment should cover all combustion-related equipment.

Material Solutions

It is well known that the corrosion/sulfidation resistance of steels increases with their chromium (Cr) content. Small amounts of silicon (Si) and aluminum (Al) in addition to Cr are also beneficial. EPRI's laboratory tests on corrosion in the presence of FeS deposits have shown that corrosion losses start to decrease when the Cr content exceeds 12% and becomes acceptably small when the Cr content exceeds 20%. Several techniques are commercially available to apply surface layers with a high Cr content on the fireside of waterwall tubes. This can be performed in the field as well as in the shop.

Metal Spray (Metallizing)

Sprayed coatings are usually 14–30 mil (0.4–0.75 mm) thick and can be applied by various techniques. The two most common are:

- Wire arc spraying. This is the most widely applied spray process. Two consumable wire electrodes are fed into the gun where they meet and form an arc in an atomizing air stream. The method has a high spray rate and low heat/energy input. It is therefore relatively inexpensive.
- High velocity oxygen fuel (HVOF). A fuel gas and oxygen are used to create a combustion flame at 4500–5600°F (2500–3100°C) to create very high particle velocities. Either powder or wire can be sprayed, although powder is more common. HVOF generally provides denser coatings with less oxide inclusions and lower porosity than the wire arc process. It also has a high spray rate but is more expensive.

Various types of metallic compositions can be used in metal spraying. For a long-lasting coating, the following factors are important:

- The Cr content should be high enough to completely prevent sulfidation because the coatings are somewhat porous and may internally sulfidize otherwise. Thus, the Cr content should be at least 25% and preferably be above 30%. Small additions of Al, Si, and Ti are generally beneficial (2–5%) and may somewhat lower the requirement for a high-Cr content.
- The coefficient of thermal expansion (CTE) should match that of low-alloy steels as closely as possible. This can be done when using high-Ni (nickel) Austenitic alloys with the 45% Cr-Bal-Ni composition. The CTE of iron base high-Cr alloys is generally considerably lower than Austenitic alloys such as 309 and 310.

The success of a metal spray coating depends to a large extent on quality material, spray guns, work skills, correct application procedures, and strict quality control to ensure that the procedures are followed rigorously. Field experience at some EPRI-monitored sites has shown that all present commercial coatings suffer from corrosion at the metal/coating interface. Here, the steel will form sulfides or a mixture of sulfides and oxides. The growing scale will cause stresses in the coating and eventually spallation (that is, complete loss of coating in local areas).

HVOF coatings are usually somewhat less permeable than wire arc coatings and may last somewhat longer. Poor surface preparation and/or installation may cause early coating spallation followed by tube corrosion. At one EPRI-monitoring site, a prealloyed 44% Cr-Ni coating showed only minor spallation after 12,000 hours of service, while a panel using a less expensive wire consisting of a Ni tube with Cr powder, also having a 44% Cr-Ni composition, showed extensive spallation and corrosion of the spalled areas. It is not known if this can be generalized.

In summary, it can be concluded that spray-on coatings are most useful in areas where the corrosion losses are relatively small (<25 mil/yr, <0.63 mm/yr). Here, a properly applied coating should last at least five years. In more corrosive areas, a 44 Cr-Ni coating cannot be expected to last much more than three years and does not provide full protection against forced outages because early spalling, for instance due to poor installation, can expose bare metal to the corrosive furnace environment. At present, there are some spray coating techniques under development that have little or no permeability. If these technologies can be successfully transferred to the field, they may provide adequate corrosion protection in highly corrosive areas as well.

Weld Overlays

Weld overlay technology, originally developed for nuclear power pressure vessels, has been successfully adopted for waterwalls in municipal waste incinerators. The Ni base alloy 625 is one of the most commonly used materials because it is very resistant to the chloride/molten salt type of corrosion occurring in incinerators. It also has a coefficient of thermal expansion that is close to that of carbon and low-alloy steels. Thus distortion during welding is minimized. 312, 622, and 309 stainless steel are also used in the application.

For boilers suffering from sulfidation corrosion due to FeS deposits and/or high levels of CO and H_2S in the flue gas, alloy 625 is not the ideal composition from a corrosion resistance point of view. Its original Cr content is only 20–21%. With 15% dilution, this would be reduced to about 17% in the worst case. Alloys with this chromium content would exhibit as much as 4–10 mil/yr (0.1–0.25 mm/yr) corrosion, thus reducing the life of a 70 mil (1.75 mm) overlay to 7–14 years in the most corrosive areas. Because of its high-Ni content, alloy 625 is also very expensive. The SA-309 stainless steel with 24% Cr and 16% Ni would be a better and less expensive choice, from a corrosion point of view. After dilution, the Cr content of the weld overlay should still be about 20%. At this level, the corrosion rate should not exceed 4 mil/yr (0.1 mm/yr), and service lives close to 15 years are feasible. However, the CTE of SS-309 is much higher than that of low-alloy steel; thus residual stresses will be considerable. This frequently leads to distortions and even cracking. However, several utilities have applied SS-309 successfully, and experience with this material is accumulating. SS-309 is an Fe-based steel and is thus relatively inexpensive.

A possible alternative to 309 is duplex steel 312, which contains 29% Cr, 9% Ni, and bal. Fe. As a duplex alloy, it contains about 50% Austenite with a high CTF and 50% Ferrite with a low CTF. Thus the average CTE should be close to that of carbon steel. After dilution, the weld overlay should still contain at least 24% Cr. The material was qualified for weld overlay application for an EPRI project and found to be acceptable for commercial speed weld overlay installation. It is presently under testing, but no results are available. Generally, weld overlaying of tubes thinner than 70 mil (1.75 mm) is not recommended. Automatic welding with multiple machines is required to coat large areas in a short time. Because most weld overlays are non-magnetic, their thickness can be measured with a standoff gage.

Most weld overlay installations in boilers retrofitted with low-NO_x burner systems have been installed in the last few years. In waste incinerators, weld overlay 625 has a finite corrosion rate, which requires refurbishment every 4–10 years. However, for most boilers suffering from sulfidation corrosion, expected corrosion rates are well below 10 mil/yr (0.25 mm/yr), depending on the deposited Cr content. Thus, lifetimes in excess of 10 years may be expected.

Weld overlay coatings, usually 60–80 mil (1.5–2.0 mm) thick, are impermeable and form a good bond with the substrate. Their main drawback is the relatively high price. However, the erosion resistance of the coating remains nearly the same as the base metal.

Laser Cladding

This is a low-heat input method to fuse a metal powder to the surface of a panel using a laser. The resulting coating is dense and well bonded to the substrate like a weld overlay but with less dilution. It is usually somewhat thinner (40–50 mil, 1–1.25 mm). Some distortion of the panel still occurs; therefore, straightening and heat treatment are usually applied. A wide variety of coating compositions is possible, but 622, 625, and 309 are the most common.

Diffusion Coatings

Chromizing is the most common coating method. To form a high-CR surface layer on a low-alloy steel (“chromized coating”), the panel is heated in a retort furnace surrounded by a powder (“pack”) containing a Ferrochrome alloy, an agent to transport Cr to the metal surface, usually a halide, and inert materials, usually aluminum oxide. At high temperature, Cr from the Ferrochrome is transported to the panel surface and diffuses into it. Two layers are formed:

- A thin Cr carbide outer layer. This layer is very corrosion resistant, but brittle and tends to spall.
- A thicker 10–15 mil (0.25–0.37 mm) Fe-Cr diffusion layer in which the Cr content decreases from about 40% at the outer surface to 12% at the coating/steel interface. This is the layer that must provide long-term corrosion resistance. Because corrosion resistance decreases rapidly below 20% Cr, only the part of the coating containing greater than 20% Cr should be counted, and it is wise to specify that the part of the coating containing 20% Cr or more should be at least 5 mil (0.13 mm) thick.

When properly specified, chromized coatings can provide good protection against sulfidation. However, they are vulnerable to cracking, followed by intergranular corrosion near welds, and are also susceptible to aqueous corrosion during downtime, especially when using high chlorine coals. Chromized coatings with less than 10 mil (0.25 mm) thickness are subject to rapid penetration through the grain boundaries, causing premature failure. Thus, quality control to ensure uniform high coating thickness is essential. Ideally, a chromized coating should be at least 15 mil (0.38 mm) thick, of which at least 5 mil (0.13 mm) has a Cr content greater than 20%. The Cr content at the surface of the diffusion layer, below the Cr carbide layer, should be at least 30%, and preferably 40%.

Fly Ash Erosion on Waterwalls

One of the most common areas where fly ash erosion of waterwall tubes is encountered is around the top of the rear wall of the furnace, where the flue gas is turned to flow through to the rear pass [38]. Erosion results largely from turbulence created by the change in flow direction and by flow around pendant tube bundles and other design features such as wing walls, which cause obstruction to the gas flow.

Other damage, which is sometimes classified as erosion in the region of the waterwalls, is that occurring from ash or slag entrained by wall blowers or possibly by direct impingement of the flames. This latter problem can arise either because of combustion problems leading to incompletely combusted coal or char particles reaching the walls from flame impingement or from the fireball being badly displaced. The most common form of damage usually included in this category is from impact of large pieces of ash or slag falling from the walls onto the hopper slopes in the bottom of the furnace or falling from the pendant tubes onto the furnace nose. Such pieces of slag can reach significant sizes and can inflict substantial mechanical damage.

Summary

Waterwall

The waterwall failure mechanisms and the associated potential root causes are described in the EPRI publication. The design enhancements, which can be implemented to address the furnace waterwall tube failure mechanisms, are summarized in Table 4-3. Table 4-3 also lists the potential benefits for these design enhancements.

Table 4-3
Design Enhancements to Improve Waterwall Tube Failures

Design Enhancement	BTF Mechanism Addressed	Benefits
Properly select furnace design parameters (that is, furnace sizing, FEGT, burner locations, burner-to-arch dimension, and other critical dimensions) to address combustion, slagging/fouling, operation, and fuel-related problems. Consider the life cycle cost in decision making.	Fireside corrosion, long-term overheating, fly ash erosion, sootblower erosion, and falling slag erosion	Increase the baseline reliability. Reduce slag buildup. Reduce or eliminate BTF. Provide operation flexibility.
Properly select the thermal hydraulic design parameters and furnace design to protect the furnace waterwall (that is, adequate flow rate, spiral wound furnace, and using riffled/ribbed furnace tube).	Supercritical waterwall cracking, long-term and short-term overheating	Eliminate BTF, inspection, and repair.
Provide attention to details of tube geometries and locations where the water/fluid flow can be reduced or disrupted: • Do not use welding backing rings for water circuitry and minimize the welding extrusions. • Use riffed/ribbed tubes in high heat flux areas. • Protect the bends around burners and opening with refractory. • Evaluate the locations with sharp changes of direction, high heat flux, high steam quality, and inclined tubes. • Do not use water tubes at furnace roof.	Long-term and short-term overheating, hydrogen damage, acid phosphate corrosion, chemical cleaning damage	Reduce or eliminate BTF, inspection, maintenance, and repair.
Use oxygenated water treatment to reduce waterside deposits.	Corrosion fatigue, long-term overheating, fireside corrosion, hydrogen damage, acid phosphate corrosion, chemical cleaning damage	Reduce or eliminate BTF. Prolong or eliminate chemical cleaning interval or requirement.
Design the waterwall welded connection with minimum local stresses at the pressure boundaries (that is, buckstay to waterwall connections, membrane to waterwall tube connections, windbox to waterwall connections, and others).	Corrosion fatigue	Eliminate BTF, inspection, and repair.
Perform combustion modeling to predict the furnace corrosion rate for over-fire NO_x reduction design. Provide the shop-installed protective coatings for fireside corrosion protection.	Fireside corrosion	Prolong the repair/ replacement requirement.

Table 4-3 (cont.)
Design Enhancements to Improve Waterwall Tube Failures

Design Enhancement	BTF Mechanism Addressed	Benefits
Install off-line boiler water recirculation system to address furnace subcooling problem.	Corrosion fatigue and fatigue	Eliminate BTF.
Evaluate the fuel ash characteristics and selected the suitable cleaning medium (air, steam, or water). Provide adequate number of sootblowers. Arrange the sootblower properly to provide adequate coverage for cleaning.	Sootblower erosion	Increase the cleaning efficiency and effectiveness. Reduce or eliminate BTF.

Economizers

Primary superheaters and economizers generally located in the convection downpass suffer from problems related to gas velocity, structural support, and thermal transients. Gas velocities can cause erosion when they are too high. This erosion is usually located around the return bends of the sections located close to the back wall. If the erosion is not too severe, baffles can be installed to protect these bends. Caution must be used when installing such baffling because the flow will be redistributed, and occasionally, worse problems can be created. The ideal design is to arrange the economizer in a way to reduce the flue gas overall velocity. Extended surface economizers have been used in the past. Extended surfaces were attached to these tubes with a vast variety of configurations (that is, longitudinal fins, spiral-wound fins, and pit-studded tubes). These designs were susceptible to pluggage when used on coals. Clean fuels such as gas and light oils appeared to give satisfactory performance in the short run. The cycling operation can cause cracking to develop in the location of the extended surface attachment. Experience has shown that a bare tube economizer with enlarged spacing can be a better design for availability improvement.

Tube-cracking problems can occur at attachment points and inlet headers for cycling units and, in the case of economizers, extended surface attachments. Support problems generally require non-rigid design of clips, brackets, bridge castings, and other support fixtures to allow adequate flexibility. The design enhancements, which can be implemented to address economizer failure mechanisms, are summarized in Table 4-4. Table 4-4 also lists the potential benefits for these design enhancements.

Table 4-4
Design Enhancements to Improve Economizer Tube Failures

Design	BTF Mechanism Addressed	Benefits
Design welded attachments properly to reduce local stresses and to ensure fail-safe. Use slip connections, saddle, or others in lieu of rigid design. Use non-welded device for tube alignment, if possible.	Fatigue	Reduce or eliminate BTF, inspection, and repair.
Use oxygenated water treatment to reduce waterside deposits.	Hydrogen damage, acid phosphate corrosion, chemical cleaning damage	Reduce or eliminate BTF, inspection, maintenance, and repair.
Design sloped horizontal sections to completely drain water at the sagged section during plant outages.	Pitting	Eliminate BTF.
Design proper flue gas side to ensure that the flue gas temperatures are below the critical temperatures.	Graphitization and dew point corrosion	Eliminate BTF.
Design the system properly to avoid fluid-induced vibration. Provide adequate supports to reduce the tube stresses and prevent tube contact and impact during operation.	Fatigue, rubbing tubes/fretting	Eliminate BTF.
Perform computation fluid dynamics (CFD) evaluation and/or cold air velocity tests (CAVT) to properly design baffles and/or screens to reduce the flue gas local velocity.	Fly ash erosion	Reduce or eliminate BTF, inspection, and repair.
Evaluate the fuel ash characteristics and select the suitable cleaning medium (air, steam, or water). Provide adequate number of sootblowers. Arrange the sootblower properly to provide adequate coverage for cleaning.	Sootblower erosion	Increase the cleaning efficiency and effectiveness. Reduce or eliminate BTF.

5
DESIGN CONSIDERATIONS FOR SUPERHEATERS AND REHEATERS

Basic Considerations for Superheaters and Reheaters

Increasing metal temperatures through the superheater and reheater circuits [3,9,49] requires tubes with increasing wall thickness and/or material changes. Thus the primary stages may use carbon steel tubing, followed by a progressive change to low-alloy ferritic steels, and finally to the use of austenitic stainless tubes for the highest temperatures in outlet sections. In superheater and reheater tubes, the dry steam temperature has no saturation limitation and is simply determined by the balance between heat flux and internal flow rate. Depending on the design, final steam temperatures of 1000–1050°F (538–565°C) can require tube metal temperatures in excess of ~1110°F (600°C) in the last stages of the superheater and reheaters sections. There are many factors that can contribute the peak tube temperature, such as mode of operation (base load or cyclic), fuels fired, and steam temperature control. The temperatures of the flue gases exiting the furnace are lower near the sidewalls than at the middle of the boiler. This occurs because the perimeter of the furnace is constructed of water-cooled tubes, and there is greater heat transfer from the combustion gases near those cooler wall tubes. Air distribution can also vary from side to side and across the unit, causing unbalanced flow of combustion gases exiting the furnace. Slagging and fouling occur, causing biasing of combustion gas flow and uneven heat absorption in the furnace and convection passes. The net effect from these combustion parameters is to cause variations in heat input to the superheater and reheater. There are two factors that contribute to element steam temperature peaks:

- Gas flow/temperature imbalance. A gas flow/temperature imbalance may be caused by a number of factors, depending on whether the unit is wall-fired (burners on the front and/or rear walls) or tangentially fired (near corner burners, aimed at a firing circle). In the case of the wall-fired units, the pattern of burners in service and distribution of fuel and air per burner have an effect on gas flow/temperature distribution to high-temperature convection sections located near the furnace outlet. On titling tangentially fired units, the rotating swirl of flue gas produces a more predictable side-to-side imbalance. Gas flow/temperature peaks can occur toward one side of the furnace outlet plane, depending upon unit type and configuration. On coal-fired units, regardless of fuel firing arrangements, furnace wall slagging patterns influence the gas temperature distribution at the furnace outlet plane. Moreover, radiant and convection superheater and reheater heat-absorbing sections are affected by coal ash fouling patterns. In severe cases, if modifications to the sootblowing system are not viable, fouling can effectively block off gas flow in localized areas of a given section, including higher-velocity gas flow in unobstructed areas, thereby creating peak element steam temperatures that promote overheating and erosion.

- Steam-side imbalance. The steam-side imbalance is defined as the percent deviation of the minimum steam flow from the average. The steam-side imbalance is a function of the arrangement of the inlet and outlet headers, the steam flow velocities in the headers, tubing configuration, total tubing steam side pressure drop, and other factors.

There are many other factors that can contribute to the peak tube temperature, such as mode of operation (base load or cyclic), fuels fired, steam temperature control methods and control range, location of burners in service, and excess air levels. All of these factors can have a major impact on the tube steam temperature patterns and the potential for long-term serviceability of these tubes. Sometimes, orifices are added to address the imbalance problem. However, tube orifices add pressure drops to the system, negatively impacting plant heat rate (especially reheater tubes), adding cost, and adding difficultly in maintenance.

Failure mechanisms of superheater and reheater tubes are not limited to creep, which indicates that these tube failures occur because of some breakdown or deviation from the design condition or assumptions. There are several major damage mechanisms that impact the high-temperature steam tubes, such as long-term creep degradation, stainless-to-ferritic dissimilar weld failures, and tube-to-header weld cyclic fatigue. All these damage mechanisms are driven or magnified to some extent by peak element steam temperatures. The complete steam-touched tube failure mechanisms and the associated potential root causes are described in EPRI report TR-105261 [9].

In the selection of tubing materials, a typical heat-transfer analysis is performed based on the non-uniform circumferential heat absorption to determine the mean and outside tube metal temperatures. The calculation system includes allowances for certain anticipated imbalances in actual service. These imbalances or tolerances are added to the calculated metal temperatures. The calculated midwall metal temperatures at any given point in the tubing are the sum of the steam temperature rise, the film and metal rise, and any applicable allowances. The material selection is based on the highest expected metal temperature, thereby adding design conservatism to the entire section. The maximum midwall metal temperature is used to determine the required tube thickness in accordance with Section I of the *ASME Boiler and Pressure Vessel Code.* It should be noted, however, that altered boiler-operating modes (such as cycling) or fuel changes that deviate from the original design fuel specification can result in loss of design conservatism.

Boiler tubes up to 4.9 in. (12.5 cm) in diameter are designed in accordance with the *ASME Boiler and Pressure Vessel Code,* Section I. Essentially, the code sets limits on wall thickness based on boiler pressure and operating temperature of the specific tube. Tube diameter selection and the design tube temperature/pressure determination are the responsibility of the designer based on the design system requirements and his or her experience and database. For high-temperature superheater and reheater tubes, the stresses are based on the hoop stress due to design pressure to produce a creep rate of 0.01%/1000 hr, as determined from the most appropriate available data. In addition, code stresses are limited to 67% of the average stress to produce rupture in 100,000 hours, or 80% of the minimum stress for rupture in 100,000 hours, whichever is lower.

The following formulae are currently used for minimum wall thickness and maximum operating pressure:

$$T = /(2S + P) + 0.005D + e \quad \textbf{Eq. 5-1}$$

$$P = S(2T - 0.01D - 2e)/[D - (T - 0.005D - e)] \quad \textbf{Eq. 5-2}$$

where

T = minimum wall thickness (in./mm)

D = outer diameter (in./mm)

P = maximum allowable working pressure (psi/kPa)

S = maximum allowable stress value at operating temperature of metal as given in ASME reference table (psi/kPa)

e = thickness factor (in./mm)

There is no corrosion and erosion allowance, per se, in the ASME code, but effectively the term 0.005D provides a normal margin for those uncounted factors. For cold drawn seamless tubing, ASME SA450 allows +22% on the calculated wall thickness; therefore, there are certain conservatisms built into the code.

Superheater and reheater tubes operate at temperatures ranging from around ~750°F (400°C) to over ~1110°F (600°C), depending on location and design. Because of the higher operating temperatures and as a result of the progressive buildup of internal steamside oxide, which increases tube metal temperatures, superheater and reheater tubes are subject to accumulation of damage by creep, which ultimately causes rupture. Therefore, such tubes have a finite service life, in contrast to economizer and waterwall tubes, which should, in principle, last indefinitely.

An additional consideration is the formation of wustite (FeO), a nonprotective form of oxide, at temperatures in excess of ~1060°F (570°C). This can lead to very rapid oxidation rates in superheater/reheater tubes and has led to limiting allowable temperatures to about ~850–950°F (464–510°C) for carbon steels, ~1026–1060°F (552–566°C) for T-11, and ~1075 to 1115°F (580–602°C) for T-22.

Superheaters/Reheaters Fireside Corrosion

The two major causes of fireside corrosion of the pendant tubes include accelerated oxidation from overheating and deposit-related molten salt attack [38].

Accelerated Oxidation From Overheating

Overheating of the superheater can occur as a result of poor initial boiler design, coal change, slagging problems that cause higher flue gas temperature, uneven gas flue distribution, fouled orifices, or other reasons. Overheating of reheaters can occur in rapid startup situations, when the combustion gas temperature at the reheater reaches its maximum value before full steam flow through the reheater is achieved. Overheating leads to accelerated oxidation of both the fireside surfaces of the tubes—which produces thickened, hard (alligator hide) scales—and the steam-side surfaces. At temperatures in excess of 1058°F (570°C), the very non-protective oxide, wustite (FeO), can be formed on iron, which leads to the onset of very rapid oxidation rates. This has resulted in the setting of service-limit temperatures for the low-alloy steels with oxidation limits. The implications of forming thickened scales on the steam-side of the tubes can also be serious because adherent scales lead to overheating of the tubes.

Deposit-Related Molten Salt Attack

Deposit-related molten salt attack concerns the development of conditions beneath a surface deposit that are conducive to the formation of a low-melting salt of the type $(Na,K)_3Fe(SO_4)_3$. These alkali-iron trisulfates form by reaction of alkali sulfates with iron oxide in the presence of SO_3 and have a minimum melting temperature (1:1 mixture of sodium and potassium salts) of 1026°F (552°C), whereas the melting points of the simple sulfates are 1623°F (884°C) for Na_2SO_4 and 1956°F (1069°C) for K_2SO_4. The level of SO_3 in the ambient gas necessary for the stability of the alkali-iron trisulfates ranges from about 250 ppm at 900°F (482°C) to 1000–1500 ppm at 1175°F (634°C). Typical values of SO_3 in the flue gas measured at the air heater are 10–25 ppm for a coal with more than 2.5% sulfur to 5–10 ppm for a 1–2.5% coal with low calcium (2–5% CaO in the ash). Medium calcium levels (5–10% CaO in the ash) in these 1–2.5% sulfur coals evidently reduce the SO_3 in the flue gas to 1–5 ppm. The current understanding is that the catalytic oxidation of SO_2 in stagnant zones beneath a layer of deposit can lead to nearly equilibrium levels of SO_3, so that conditions are favorable for the formation of trisulfates in deposits up to about 1300°F (704°C). Above this temperature, the required SO_3 concentrations cannot be sustained, and the trisulfates become unstable, decomposing to the alkali sulfates, which are solid. It is widely accepted that compounds of this type play a critical role in the corrosion of superheater tubes.

Deposits on the superheater tubes are usually found tightly bonded to the tubes at room temperature. They typically consist of three distinct layers:

- A hard, brittle and porous outer layer, which is the bulk of the deposit and has a composition similar to the boiler fly ash.
- A white intermediate layer. When this layer has a chalky consistency, corrosion is found to be mild or nonexistent. When it is fused and semiglossy, corrosion is found to be severe. Compounds identified in this layer include complex alkali sulfates, including the alkali iron trisulfates.
- A black, glossy inner layer composed primarily of oxides, sulfates, and sulfides of iron.

The typical characteristic relationship of wastage rate to tube metal temperature is shown in Figure 5-1. This is referred to as a "bell-shaped curve," which clearly illustrates the rapid increase in wastage rate with temperature under conditions where the alkali iron trisulfates can form and melt. The abrupt decrease in wastage occurs around 1300°F (700°C), when the trisulfates are no longer stable. With the steam temperature controlled at 1000°F (538°C), the outer skin temperature of the superheater tube should not exceed about 1100°F (593°C), which is well outside the zone of maximum corrosion. These data were developed for aggressive eastern coals. For western coals, the temperature at which maximum attack is encountered can be different because of the generally high levels of CaO and MgO in the ash. In addition, the relationship indicated in Figure 5-1 has been shown to be a function of both metal temperature and gas temperature, so that the location of the corrosion peak may depend on factors related to boiler design as well as operational factors.

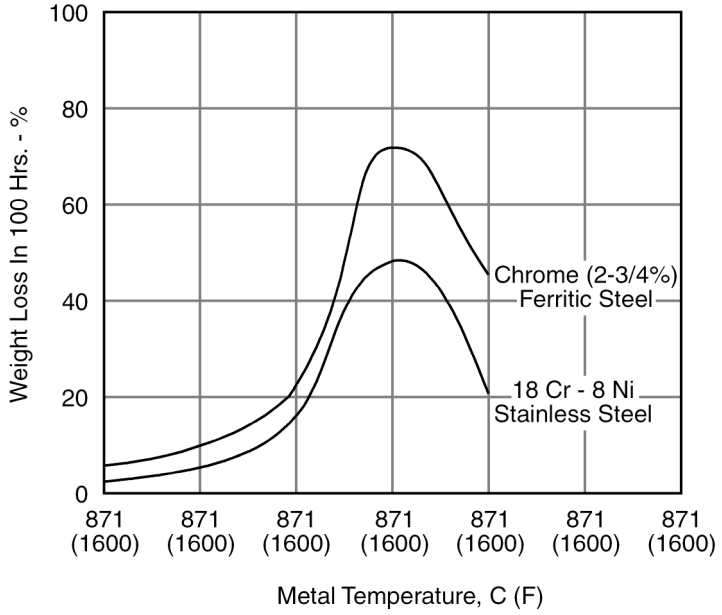

Figure 5-1
Effect of Metal Temperature on Corrosion Rate

Experience shows that not all coals are necessarily expected to form aggressively corrosive molten sulfates under similar circumstances. Studies have shown that the participation in the formation of the complex sulfates of species such as CaO and MgO leads to elevation of the melting points of the sulfates and so reduces the possibility of molten salt attack. This led to the concept of blending coals to adjust the levels of Ca and Mg, depending on the Na, K, and sulfur content of the coal, to reduce the "corrosion index." For a detailed discussion, see "The Control of High-Temperature Fireside Corrosion in Utility Coal-Fired Boilers" [51].

As shown in Table 5-1, Raask [53] has proposed a simple three-category ranking of the corrosiveness of coals based on the sum of the percentages of water-soluble sodium and potassium in the coal. For this purpose, the water-soluble sodium and potassium are determined on the bomb residue from the measurement of coal calorific value.

Table 5-1
Three-Category Ranking of the Corrosiveness of Coals for Water-Soluble Na + K

Weight Percent	Corrosiveness
<0.5	Low
0.5–1.0	Medium
>1.0	High

A strong correlation has been found between the corrosion rate of superheater/reheater tubes and the chlorine content of the coal. The current understanding is that the Cl promotes the release of both Na and K into the flame. Therefore, Cl is thought to act as a sort of catalyst for the molten trisulfate attack, rather than participating directly. There is also evidence that HCl formed in the flame can destroy the Fe_2O_3 layer that normally exists on a steel surface, thereby exposing it to additional oxidative attack. The potential for corrosion from Cl is recognized by the U.S. boiler manufacturers, and a limit of 0.3% Cl in the coal is usually set.

Measures to Reduce Superheater/Reheater Tube Failures From Fireside Corrosion

The principal strategy used to control the corrosion of superheater/reheater tubes is to limit the maximum temperature of steam generated to 1000°F (538°C) or, in some cases, 1050°F (566°C). The corresponding tube surface temperatures are 1050–1150°F (566–621°C) or 1100–1200°F (594–649°C), respectively. These tube metal temperatures are maintained in a regime where the rate of corrosion from alkali-iron sulfate-type attack is considerably less than the maximum possible.

As described earlier, the corrosivity of a given coal can be related to its content of chemical species such as S, Na, K, Cl, Mg, and Ca, as well as related to the relative amounts of some of these. For eastern coals, such considerations have been used to suggest blending of coals or making small additions to adjust the relative amounts of the corrosive species to lower the overall corrosivity or corrosive index. Coal washing can also help in this respect. However, the main recent driving force for blending or washing has been to comply with the sulfur emission standards of the U.S. Environmental Protection Agency (EPA). Also, some coals have naturally low corrosive indices as related by, for instance, Borio's criteria [51], so that higher steam/metal temperatures could probably be used with little or no adverse effect on corrosion, provided that satisfactory combustion conditions could be achieved. Some western coals and some lignites are in this category.

Although additives are sometimes used to control corrosion in coal-fired boilers, the high ash content of coal compared to that of oil has put practical and economic limits on the use of additives in coal-fired boilers. The major additive application in coal firing has been for fly ash conditioning to increase the electrostatic precipitator efficiency with low-sulfur coal. Very little has been done with additives to combat high-temperature corrosion from coal ash. The EPRI survey of the use of fireside additives, reported in 1980, showed that only two utilities had tried

additives for this purpose. In four of six boiler trials, Mg-based additives were judged to be effective, but no quantitative data were available.

Other operating parameters, which may affect corrosion of the superheaters and reheaters, are the fineness of the coal fed to the burners, as described earlier, and the level of excess air. Low excess air levels could reduce the concentration of SO_3 in the flue gas and possibly affect the stability of the alkali-iron trisulfates: however, it is difficult to operate coal-fired boiler at low excess air levels and low excess air may exacerbate waterway) corrosion, so that this strategy is probably impractical. The extent to which those measures that are used to prevent fouling or ash buildup on the pendant tubes can affect corrosion is difficult to assess. Sootblowing is effective in removing loose deposits, but probably does not detach the strongly bonded deposits characteristic of alkali-iron trisulfate corrosion. These are sometimes shed when the tubes are cooled at shutdown, but mechanical means such as grit blasting are often required to remove such deposits. Soot-blowing may be effective in minimizing deposit formation in the early stages, and might limit the accumulation of some corrodents on established deposits.

The most common palliative measure adopted if corrosion of the superheaters or reheaters is encountered is the attachment of shields to the leading edges of the tubes so affected, which are usually the first (upstream) rows of each bundle. Since the shields are not in intimate contact with the tubes, they are less effectively cooled by the steam flow, and so attain temperatures higher than those at which the alkali-iron trisulfates decompose. The deposits that build up on the shields therefore do not pose the threat of attack by molten salts. The shields must be resistant to high-temperature oxidation and are usually made from alloys such as AISI 309 (25% Cr). However, shielding can be a serious maintenance problem. Other material solutions include the use of composite materials, where a corrosion-resistant alloy is clad over the load-bearing alloy by co-extrusion. Inconel 671 (Ni-48Cr) and AISI 310 (Fe-20Ni-25Cr) have been found to provide superior corrosion resistance to the other austenitic materials in this application. Composites for which considerable field experience has been gained are AISI 310 Nb clad over low-alloy steels or Esshete 1250 and Incoclad 671/800H [54–56].

Fly Ash Erosion on Superheaters and Reheaters

Causes of Fly Ash Erosion on Slag Screen Tubes, Pendant Superheaters, and Reheaters

Fly ash erosion can occur in secondary superheaters and outlet reheaters when the gas velocity is locally increased above the design level [38]. Blockage of the normal gas flow path by slag or ash deposits can result in channeling of the flue gas through the tube banks, with rapid thinning of the first one or two tubes in any channel. Therefore, erosion problems can be compounded by fouling. Localized rapid flow can also result from misalignment of tubes through heat distortion or from faulty maintenance, which produces a lower resistance to flow in that part of the tube bank. Various design features of tube banks can give rise to localized disruptions of the gas flow, and locally turbulent regions may result in associated erosion. In some pendant tube bank designs where, for instance, a wrapper tube is brought out from the normal tube alignment and taken around the leading edge of the bank to provide structural rigidity, eddies may be created by

flow around the wrapper tube and may cause localized erosion of the adjacent tubes immediately downstream.

Causes of Fly Ash Erosion on Back Pass Tubes

In boilers that have a high ash loading in the flue gas, erosion is most often found on the return bends of tube banks adjacent to the rear wall of the back pass and on the economizer tube bundle. Erosion of the back pass region of most boilers results from stratification of the fly ash and from high gas velocities due to poor original design or to plugging or channeling. As the flue gas passing over the upper furnace "nose" is made to change direction and flow down the back pass, there is a tendency for the entrained fly ash to be centrifuged towards the outer wall of the bend, which is the rear wall of the back pass. In some cases, the bend radius and the ash characteristics are such that the ash impacts on the top part of this rear wall. In general, the turn causes the bulk of the fly ash to be concentrated in roughly the outer third of the cross section of the radial flow path, which places it adjacent to the rear wall. From there it flows essentially straight downwards. Any low-resistance flow paths in the tube bundle in this location will, therefore, experience very high ash loadings as well as high gas velocities. Because of the practical limitations of tube bank design, the return bends of the rear pass, horizontal tube banks usually form such low-resistance paths where they interface with the rear wall or side walls. Erosion is commonly found to occur on the leading edges of the top and bottom portions of these bends and sometimes on adjacent wall tubes.

There have also been observations that suggest that the main flue gas flow path is essentially a straight line from the entrance to the back pass to the point where the first horizontal tube bank interfaces with the rear wall of the back pass. Where this form of flow localization occurs, a large concentration of fly ash will reenter the fastest moving flue gas stream just before it enters the low-resistance flow path between the return bends of the top tube bank and the rear wall, thereby exacerbating an already severe erosion condition.

In order to maintain high heat-transfer rates in the back pass tube banks as the flue gas is being progressively cooled, the spacing of the tubes is reduced to achieve the desired gas velocities. Depending on boiler design, the rear pass may contain horizontal tube bundles for the secondary reheater, superheater, and economizer. In some designs, in order to have a compact economizer tube bundle, features such as longitudinal or transverse or spiral fins and staggered tube arrangements are employed. These result in very narrow flow passages, which are susceptible to plugging by fly ash and to misalignment as a result of thermal distortion or faulty maintenance. Staggered tube rows have proven susceptible to erosion of the first and second row tubes, and sometimes of tubes in subsequent rows. Apparently, the first two rows of tubes in a triangular pitch can serve to accelerate and turn the flue gas, leading to erosion of the next surfaces to be contacted by the ash. Some forms of fins and antivibration structures have also been observed to create turbulent zones, with resulting localized, severe erosion.

Measures Against Fly Ash Erosion

Five courses of action are available for reducing fly ash erosion in any location in a boiler [57–59]:

- Reduce the bulk gas velocity in the boiler.
- Even out the gas flow across the boiler section to remove localized turbulent regions.
- Minimize the number of impacts of fly ash on the tubes by reducing the loading of fly ash in the gas.
- Even out the concentration of fly ash across the boiler section by eliminating centrifugal stratification.
- Decrease the erosivity of the fly ash.

Reduce the Bulk Gas Velocity

Reducing the bulk gas velocity can be achieved to a limited extent by the use of lower excess air levels, lower levels of hot gas recycle, and, in extreme cases, by operating at reduced load. Local high velocities can be controlled by baffling. For coals of high moisture content, small reductions in the flue gas velocity would result from drying the coal, but in most cases the gains would not be cost effective.

Reduce Localized Gas Velocity

Steps can be taken to reduce the incidence of localized high-velocity gas streams and to generally promote a uniform flue gas velocity across the furnace cross section. Regular and properly sequenced sootblowing should be capable of preventing plugging by loose deposits. Tubes have been removed from some areas of tube banks to help minimize blockage problems and to generally reduce the gas pressure drop at that point. This practice is generally thought to be effective, although the tubes forming the edges of the lanes are subject to erosion and must be protected.

Solid plate baffles intended to effectively prevent gas flow between the tube banks and the walls have sometimes acted to deflect and concentrate a stream of fly ash onto adjacent tubes, with the result that highly localized wastage has been experienced. Such secondary effects can be minimized if sufficient clearance can be maintained between the baffles and the downstream tube bank so that jets and eddies induced by the baffles are dissipated ahead of the tubes. This is obviously impractical in many existing boilers but could be incorporated at the design stage. However, the placement of baffles is often dictated by the available space above and between tube banks. Baffles sometimes simply move the erosion problem from the interface of the tubes with the wall to a more centralized location on top of the tube bank. In fact, improper placing of baffles of this type has been one of the most common causes of repeated erosion failures. Proper techniques should be used in selecting the most appropriate type of baffles and their location. Modified baffle plates containing holes (punched plate) to allow some gas flow, and so reducing

the deflection/concentration effect, are also used but have introduced a unique problem. Depending on the positioning of these baffles, with respect to the downstream tubes and the resistance to flow imposed by the plate, flow through the holes may result in concentration of the fly ash and accelerated erosion of the first tubes to intersect the gas flow downstream.

A further extension of the punched plate baffles is the use of expanded metal screening. This is available in a range of mesh sizes and can be selected to provide a range of gas flow resistance. A sophisticated methodology for the application of such screens has been developed. This involves the mapping of cold-air velocities at given locations in the boiler to develop velocity profiles for the complete flow cross section. These profiles are used to locate areas of high-gas velocities where screen baffles should be applied; the information can also be used to quantify the resistance to flow required in these areas to produce a uniform profile over that particular boiler cross section. After screen baffles have been installed, the velocity profiles are re-measured to quantify their effectiveness and to look for any new high-velocity flows. The measured cold-flow velocities can be converted to "hot-gas" velocities using temperature-related correction factors, which are applied to account for the differences between the cold and hot gas and the effects of heat transfer in the tube banks. Other techniques similar to the cold-air velocity, such as computer modeling and physical modeling, have been used to determine the plant baffles and screens to reduce the localized high flue gas velocity.

Reduce Ash Loading

High fly ash loading in the flue gas is a direct function of the ash content and calorific value of the coal. Washing the coal may remove sufficient ash to significantly affect the fly ash loading in the flue gas and may also result in other benefits. The other obvious remedial action that would effect a major reduction in ash loading is to switch to a coal of lower specific ash content (usually expressed as weight of ash/10^6 Btu).

Eliminate Stratification

Eliminating stratification can be implemented by proper choice and siting of baffling and can probably be incorporated with reducing localized gas velocity.

Decrease the Erosivity of the Fly Ash

Ash erosivity is known as a given specific ash content. Some coals are significantly more erosive than others. The reasons for this depend on the chemistry and physical form of the fly ash, which are critically affected by details of the distribution of the mineral matter in the coal and its behavior during combustion. For some erosive Australian coals, a change in the fineness of the coal to less than 0.5% remaining on a 50 mesh sieve (300 μm) has been reported to be effective in reducing erosion. Because understanding of these phenomena is limited, it is usual to use some laboratory testing to rank order the erosivity of candidate coals under given conditions of combustion and boiler configurations to develop a basis for selection.

Reheaters' Out-of-Service Corrosion

Out-of-service corrosion can take place in almost any circuit of a boiler [36,60]. Because the reheater operates at a lower pressure, reheater tubes typically have thinner walls, so any wall loss due to corrosion has a greater impact on the integrity of the reheater tubing.

Out-of-service internal corrosion damage is usually caused by dissolved oxygen pitting and is a common problem in reheaters. When a boiler is taken out of service, and as it cools, condensate can form and accumulate in the low areas of horizontal tubing. Many horizontal tube sections are nondrainable due to arrangement or tube sag between supports. Condensate can also form in any other low spot, such as in the bottom bends of vertical pendant tubing. Corrosion damage due to dissolved oxygen attack can occur on any wetted internal tube surface. However, it is usually more severe at the water-air interface areas. This internal corrosion or pitting will eventually result in pinhole leaks.

Due to space limitations and access problems, it may not be possible obtain ultrasonic testing (UT) readings of other than the leading or trailing tubes in each bank. Radiography of suspect areas is sometimes effective in indicating major corrosion damage.

Increased reheater reliability can be obtained as follows:

1. The best way to prevent dissolved oxygen out-of service corrosion damage is to prevent oxygen from entering the reheater tubing. Provide a means to isolate the reheater and to apply a nitrogen blanket when the unit is out of service.

2. If the reheater is not equipped for the nitrogen blanket application, open reheater vents and pull a vacuum on the condenser for as long as possible while the unit is still hot and being shut down to help the reheater dry out. This procedure will minimize condensate accumulation.

3. Modify the storage procedures during lengthy outages to include one of the following methods:

   - Wet storage with O_2 scavenging
   - Nitrogen blanketing
   - Freeze protection must be considered during winter months

4. Redesigning the horizontal surfaces for adequate drainage (see Figure 5- 2) or upgrading pressure part material, such as 9 Cr material, should be considered when replacement becomes necessary. Upgrading to stainless steel material is forbidden due to the possibility of stress corrosion cracking.

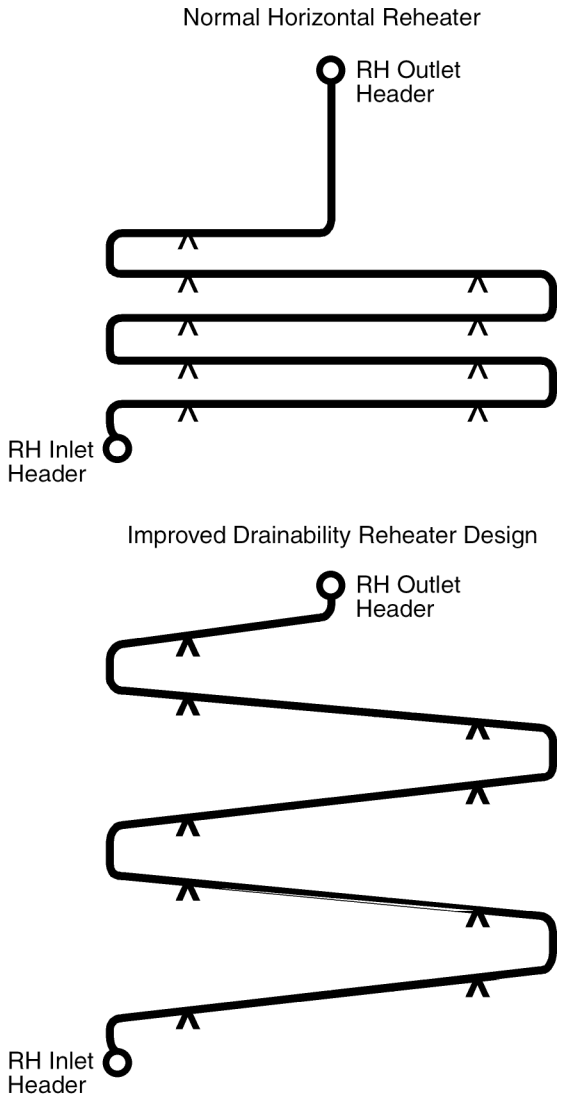

Figure 5-2
Improved Drainability Design for Horizontal Reheater

Dissimilar Metal Welds in Superheater and Reheater Tubes

Austenitic stainless steel tubing is commonly used in the final stages of superheaters and reheaters, where increased creep strength and resistance to oxidation are needed. For economic reasons, low-alloy ferritic steel tubing is used in earlier stages where temperatures are lower. There is, therefore, a requirement for weld joints between austenitic and ferritic tubing, defined as dissimilar metal welds (DMW) [61,62].

Joining the ferritic and austenitic tubes can be made either by induction pressure welding without the use of filler metal or by fusion welding with either stainless steel or nickel-base filler metals. In the utility industry, DMWs are made by fusion welding with stainless steel filler metal.

Two types of welds between ferritic steel, usually SA-213 T22, and austenitic stainless steel need to be addressed: tube butt welds and tube support welds. Tube-to-tube butt welds have received considerable attention. Of equal importance are support welds. Because the support gets less cooling from the steam-cooled tube, higher alloys or austenitic materials are required.

In the past, the majority of DMWs were made with a stainless steel alloy weld. Most failures in the industry have been in these welds. DMWs made with stainless steel electrodes may fail in the T-22 heat-affected zone (HAZ), even at temperatures below the creep range. The problems arise from:

- Differences of coefficients of expansion between austenite and ferrite leading to the formation of large temperature-induced stresses at the weld interface.
- Carbon diffusion from the ferrite to austenite at the weld interface reduces the creep strength of the ferrite so that creep voids develop and failure occurs by creep along the weld interface in the weakened ferritic alloy.
- Differences in oxidation resistance between the two materials give rise to an oxide wedge that forms in the ferritic alloy adjacent to the weld deposit. Under severe ash-corrosion conditions, corrosion rates in the HAZ can be rapid.

In the case of tube-to-tube tie or support-clip welds, the same types of problems exist; however, the location of the failure can be transferred from the tube to the support. Although this allows the superheater or reheater to fall out of proper alignment, it does not force the unit offline with a tube leak. By using a welding alloy that closely matches the ferritic-alloy composition, the weld problems are thus transferred to the alloy support material. Failure, when and if it occurs, will be away from the pressure part. Tube-tie or support-clip welds should be made with a smooth blending of the fillet to prevent the formation of a stress-concentration notch that may cause failure.

Extensive studies of DMW failures have been sponsored by EPRI. All of these studies indicate that substantial improvement in the expected life can be achieved by six guidelines:

1. Use Ni-based welding alloys for all DMWs, both tube-to-tube butt welds and the attachment of stainless-steel support or alignment attachments. The best welding rods appear to be the high-Ni-alloy welding materials. Austenitic alloys with substantial amounts of Ni have coefficients of expansion closer to ferrite than do stainless steels. Thus, the temperature-induced stresses are less. Ni does not form a carbide, while iron and Cr do. As a consequence, carbon diffusion from the ferritic alloy, T-22, is less of a problem. Less carbon loss at the weld interface means that grade T-22 steel will maintain its creep strength better.

2. Select higher weld preparation angle (weld geometry) to increase the areas of contact between steel and welding rods to reduce the local stresses.

3. Locate the DMW at as low a temperature as possible. This means that the weld at the outlet end of a superheater or reheater should be in the penthouse or header enclosure. The metal temperature here will reflect the steam temperature only. No heat transfer between flue gas and steam occurs at this location, so the metal temperature cannot be greater than the steam.

The low-temperature weld toward the inlet end should be made at a metal temperature below 1000°F (538°C) if possible or at as low a metal temperature on the inlet as can be arranged.

4. Make the welds in vertical rather than horizontal runs of tubing. The vertical leg will have only the weight below and will minimize any bending moments that may contribute to the overall stress.

5. Make the DMWs in a shop. This means that the "Dutchman" tube pieces will be used with all DMWs made in the shop. The shop weld should use semiautomatic- or automatic-welding processes to keep the geometric discontinuities to a minimum and to obtain better weld quality. The weld should be smoothly blended to the base metal with no undercuts or other abrupt section changes that would act as a stress riser.

6. Design DMWs so that postweld heat treatment (PWHT) is avoided. Austenitic-alloy tubes should be welded to T-22 stub tubes, not directly to P-22 headers. At temperatures and times used for PWHT of chromium-molybdenum alloy headers, carbon will diffuse out of the ferrite, form a plane of carbides at the weld fusion line, and leave a low-carbon HAZ. Without any carbide, the creep strength of this region will be reduced and premature failures are likely, even when Ni-based welding materials are used for the DMW.

By following these recommendations, the life expectancy of a DMW can be improved substantially over those made with stainless-steel filler metal.

Problems with dissimilar metal welds have been investigated and documented in detail by EPRI. The findings are contained in EPRI's report series CS-4252. A set of generic guidelines for the assessment of existing DMWs was published for guidelines for exiting DMWs remaining life assessment, NDE techniques, metallographic examination, weld repairs and replacements, and a detailed plan and schedule for future inspection and maintenance. The remaining life assessment is performed by a computer code, PODIS, for estimating the damage level present in a DMW based on its service conditions.

The EPRI computer code PODIS is composed of damage models that contain constants whose values were empirically derived from a large database of failed and damaged DMWs. The use of the PODIS code to optimize the new dissimilar metal weld design is presented in Appendix A.

Tube Supports

Support and alignment of superheater, reheater, and economizer elements within the boiler have been difficult problems for many years [20,60,64]. Temperatures, gas velocities, the corrosive and erosive properties of the products of combustion, as well as the ash fouling or plugging characteristics govern the design of the assemblies and their supports.

Greater flexibility of the superheater and reheater header terminal tubes has been provided to withstand the increased cyclic stresses resulting from present-day unit requirements of sliding pressure, two shifting, cycling duty, and so on.

In addition to resisting the internal fluid pressure, the boiler tubes might need to carry other loads such as the dead weight, furnace pressure, overall thermal expansion, wind loads, and earthquake loads (if applicable). The tubes can also serve as a portion enclosure to housing the flue gas. The supporting lugs and attachments to the boiler tube are often required to transfer these loads to the external load-carrying building members. These devices are often referred to as structures and seals or mechanical/structural support systems. These supports require rigidity and strength to carry the load and the support system and also require flexibility to reduce the thermal loads if cycling is anticipated. Many fatigue-related boiler tube failure mechanisms are associated with the improper design of the support system. Examples include:

- In vertical superheater tubes, welded lugs are used to carry the dead weight of the tube bundles and to align the tubes to maintain the spacing between the tube panels. The welds will transfer flow to cool the welded lugs. If the weld is too small, the lugs can be very hot and will not last long. If the weld is too big, the local stress will be high and cause fatigue failures. It is preferable to see the lug failure instead of tube failure. Extensive lug failures can cause maintenance problems and, in extreme cases, system problems.
- If two rigid lugs are used in a straight tube, thermal loads due to the constraint of thermal expansion can cause either tube/weld cracking or tube bowling.
- The major cause of corrosion fatigue problems in water-touched tubes are related to the attachment problem; that is, buckstay connection to waterwall tubes, windbox connection to the waterwall tubes, and membrane or peg fin weld to the waterwall tubes.

There have been numerous improvements in the design of these mechanical supports over the years. Many of these have been retrofitted to the old units, reducing maintenance and improving availability. The design features depend on the manufacturer and cannot be completely described here. However, some typical ones are reviewed in the following sections.

Fluid-Cooled Spacers

Fluid-cooled spacers are used in high gas temperature areas to maintain alignment of the assemblies across the width of the unit. Two examples are:

1. One of the older arrangements of these spacers, as shown in Figure 5-3, consisted of support lugs welded to the pendant assemblies with fins attached to the spacer tube to maintain alignment. This design led to problems of tube-to-tube and tube-to-lug abrasion. The modified support arrangement shown in Figure 5-4 consists of interlocking spacer support lugs, which prevent contact between adjacent tubes and between tubes and lugs. Fluid-cooled spacers are also used to restrain swinging of large division panels, which are located over the furnace outlet and have experienced similar abrasion problems.

2. The secondary superheater outlet headers may contain steam-cooled spacer tubes. The steam-cooled spacer tube design is used on many units to maintain superheater section side spacing. Internal longitudinal cracks can develop on the inside of the outlet header in the vicinity of the steam-cooled spacer tube entries. These cracks may be caused by thermal quenching from water that clears the spacer tube during startup and impinges on the higher temperature outlet header internal surface. Longitudinal-type cracking can also develop in the spacer tube

boreholes because of this thermal quenching. These steam-cooled spacer tubes initiate in the secondary superheater inlet header and end in the superheater outlet headers. These tubes have shorter tube lengths when compared to the pendant superheater tubes. The lower temperature of these spacer tubes creates local thermal stress at outlet headers.

Wraparound steam-cooled spacer tubes have been eliminated by one boiler manufacturer through the introduction of split-ring castings to stabilize the pendant tubes and some rearrangement of the steam circuit. Austenitic alloys such as Inconel 671 or 509 stainless steel are used for these castings.

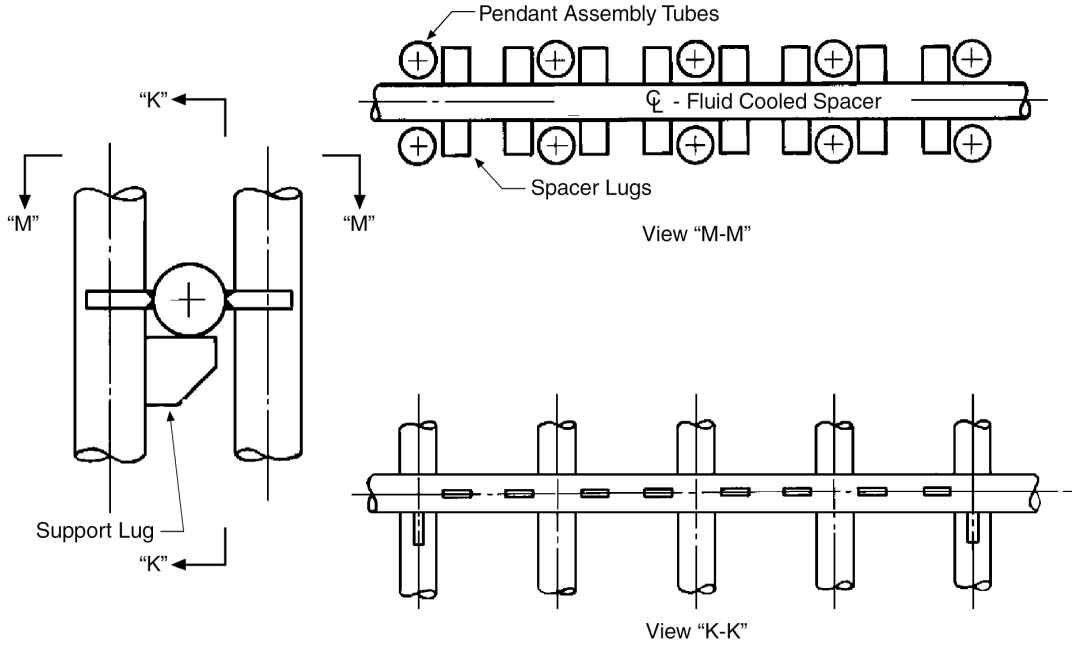

Figure 5-3
Old Support Arrangement of Steam-Cooled Spacer Tube

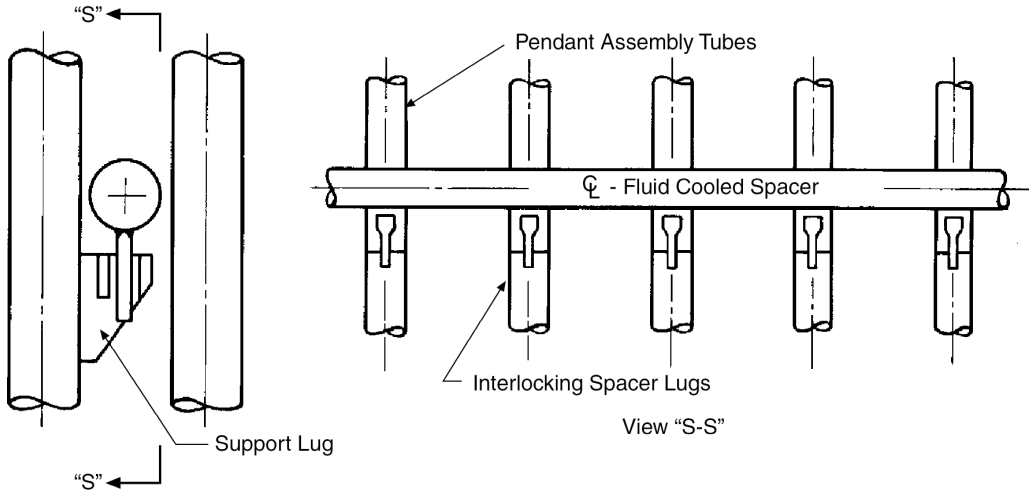

Figure 5-4
Modified Support Arrangement of Fluid-Cooled Spacer Tube

Tube Ties

Solid tie lugs between tubes were often used in the support structure of both horizontal and vertical superheater and reheater tubes. Where these ties did not permit adequate temperature-induced differential expansion between tubes, fatigue failures occurred. Lugs amplify the heat absorbed by the tube at this connection, acting as a fin. A typical example of this is shown in Figure 5-5. Figure 5-5 also shows the new design, which makes use of slip spacers to a much greater extent than did the old designs. The new designs also have greater flexibility in the tubes where they attach to the headers. Many older units did not have enough flexibility between the wall or roof penetration and the headers. After years of flexing, fatigue failures have been experienced in the tube stubs. By providing more flexibility between the penetration and the header, this problem can be alleviated. This is an important consideration for units now being considered for cyclic operation.

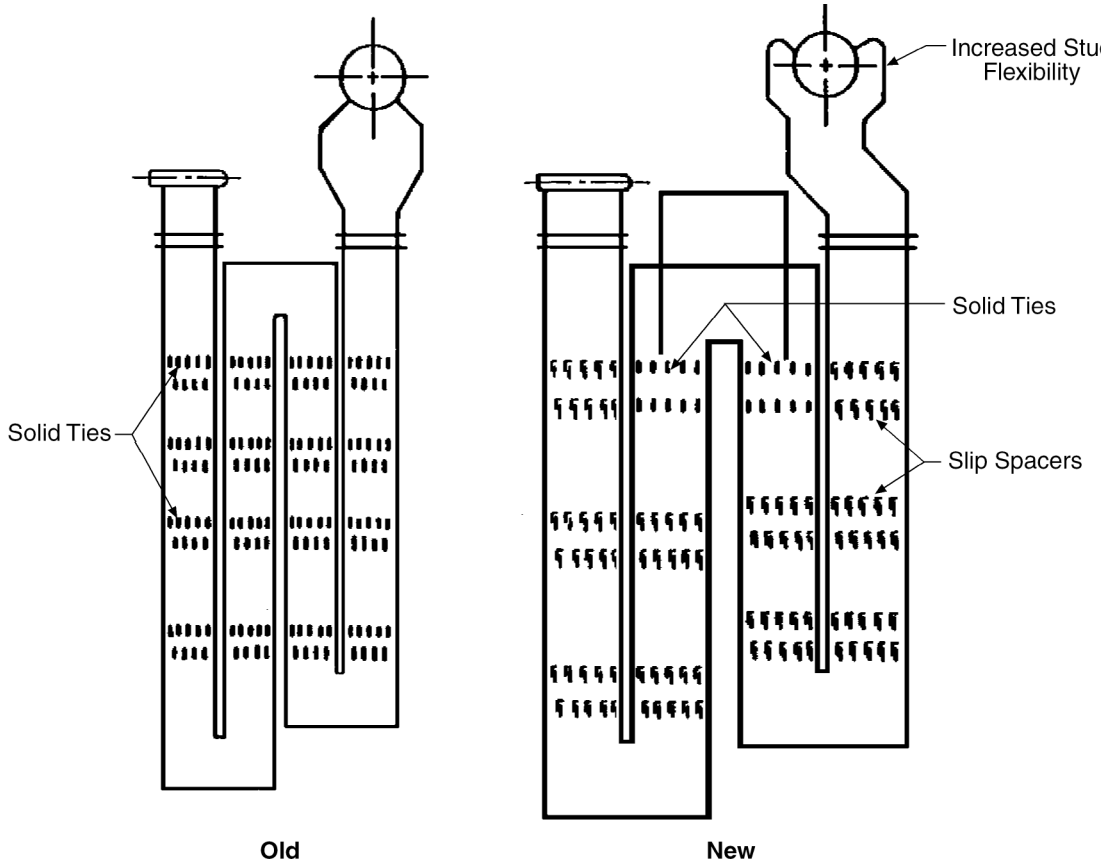

Figure 5-5
Tube Ties Arrangements

With the bumped tube design as shown in Figure 5-6, the adjacent tube is bent to approach the tube to which it is welded, forming a shorter fixed tie. Similarly, the size of the slip spacer was reduced by using a new design. This slip spacer is likewise located at a point where the tubes are bent to reduce the distance separating them. This reduces the size of the lugs attached to the tube and minimizes the heat absorption due to the fin effect. Reduction of the lug size is also meant to

reduce the weld size, and the weld size should be less than the tube wall thickness to reduce the potential for tube failure.

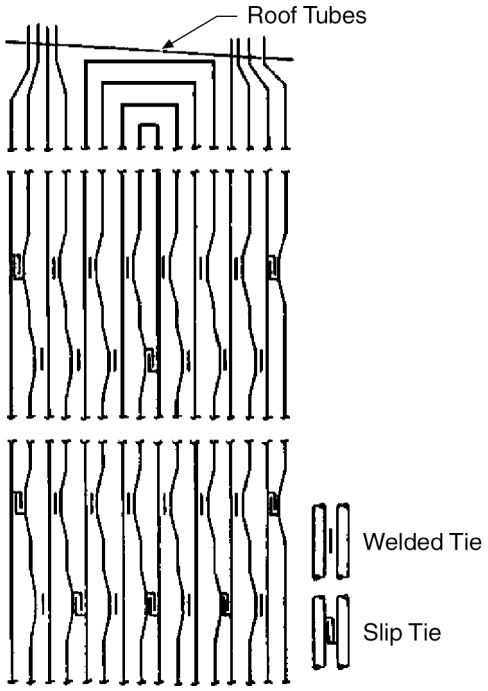

Figure 5-6
Modified Tube Tie Attachments

For the support of horizontal reheater, superheater, and economizer assemblies in the rear gas pass, welded rigid plant-type connections are typically used. High plate temperature and temperature differences between tubes have resulted in tube failures with this type of support. Modified design practices include welded tube saddles or ladder supports. The ladder supports can be rigid members or steam-cooled tubes, depending on the flue gas temperature.

Using Life Assessment Techniques for Design Evaluation of Superheater/Reheater Tubes

Creep rupture failure of SH/RH tubes is one of the major causes of forced outages of boiler tubes [2]. These failures are often the result of localized conditions arising from wide variations in temperature distribution in the tube bank and many other reasons. Calculation techniques are generally ineffective to prevent these local failures. Nevertheless, the original SH and RH designs are based on the calculation techniques with many assumptions; that is, steam-side and fireside film coefficients. Upset factors are also applied to cover uneven distribution for steam flow, flue gas flow, and high spot heat absorption rate. This design information depends on the boiler manufacturers' databases and experiences. It may not be the same from one boiler manufacturer to another. The ASME code allowables are applied to cover uncertainties in material, fabrication tolerances, and other unaccounted factors. The ASME code design is applied to the initial design only. Service degradation will occur, and it is the responsibility of individual utility companies to decide the remaining life of the boiler pressure components to

determine the suitability for continuous operation. They must assume the consequences of unreliability and the potential safety risk.

Extensive data in the literature have shown that in relatively pure steam, the growth of oxide scales under isothermal conditions is a function of temperature and time of exposure, and it obeys specific rate laws. Internal oxide scale thickness has been used to assess the remaining life of the superheater and reheater tubes [65]. In this methodology, the tubes at risk are identified by ultrasonically measuring the thickest steam-side oxide scale and thinnest wall thickness in the tubes. The remaining life of each tube is then predicted by a computation method base on the Larson-Miller Parameters. EPRI research has further refined this by applying internal oxide growth and corrosion wastage laws. This internal oxide growth and corrosion wastage can be used to predict the future oxide scale thickness and tube thickness reduction, which can be used to assess the new design and obtain a perspective of the "design life." This approach involves several assumptions, just like many other techniques. A detailed demonstration of this approach will be presented in Appendix A. Future tube life monitoring can also be adjusted through the use of actual steam-side oxide scale thickness and operating data. The initial measurement of the oxide scale thickness at the selected tubes and locations is important to establish the baseline information. Operation improvement can be made with the data collected from the thermocouples installed at tubes outside the flue gas regions. EPRI has developed TUBELIFE and TULIP computer codes, which can be used to serve this purpose. Other codes based on similar principles include NOTIS, TUBECALC, TUBEPRO, and several other proprietary computer codes. The use of the PODIS code to optimize the new dissimilar metal weld design is presented in Appendix A.

Summary

Superheaters

Secondary superheaters are exposed to high-temperature flue gas and contain steam at its highest temperatures. Conditions such as high temperatures, wide side spacing, proximity to the furnace, and exposure to radiant heat generally cause some very interesting design problems. Recent experience and test data show that *these* conditions are not the *only* factors to consider. Flow model testing and field test data have shown that gas stratification can exist. This stratification is influenced by a variety of factors: burner size, burner plan, furnace geometry, wing walls, division walls, platens, as well as geometry of the furnace arch. Higher-grade alloys are required in units with stratification; but because of the locally higher gas temperatures, they do not increase the design margins as much as expected. The higher alloy superheater, besides costing more, has additional problems. If the conditions are severe enough, stainless steel would be used in part of the superheater. The thermal expansion rates of stainless steel are greater than those of alloys. More significant is the inherent weakness of the dissimilar metal welds. The design enhancements, which can be implemented to address the secondary superheater failure mechanisms, are summarized in Table 5-2. Table 5-2 also lists the potential benefits for these design enhancements.

Table 5-2
Design Enhancements to Improve Superheater Tube Failures

Design	BTF Mechanism Addressed	Benefits
Properly select furnace and convective pass design parameters (for example, FEGT), as well as arch geometry, tube spacing, and other critical parameters and dimensions to address fouling and erosion problems. Consider the life cycle cost in decision making.	Sootblower erosion, fireside corrosion, long-term overheating, fly ash erosion	Increase the baseline reliability. Reduce slag buildup. Reduce or eliminate BTF. Provide operation flexibility.
Design welded attachments properly to reduce local stresses and to ensure fail-safe. Use slip connections or nonwelded device for tube alignment, if possible.	Fatigue	Reduce or eliminate BTF, inspection, and repair.
Select proper DMW joint locations and provide adequate support design to reduce the tube stresses. Use shop-welded DMW joints, proper welding prep design, and welding filler material to reduce the residual stresses and to increase the joint strength.	Dissimilar metal welds	Reduce or eliminate BTF, inspection, and repair.
Provide conservative tube design and material selection.	Fireside corrosion, long-term overheating	Eliminate BTF, inspection, and repair.
Evaluate the fuel ash characteristics and select a suitable cleaning medium (air, steam, or water). Provide adequate number of sootblowers. Arrange the sootblowers properly to provide adequate coverage for cleaning.	Sootblower erosion	Increase the cleaning efficiency and effectiveness. Reduce or eliminate BTF, inspection, and repair.
Design the system properly to avoid fluid-induced vibration. Provide adequate supports to reduce tube stresses and prevent tube contact and impact during operation.	Fatigue, rubbing tubes/fretting	Eliminate BTF.
Perform CFD evaluation and/or CAVT to properly design baffles and/or screens to reduce the flue gas local velocity.	Fly ash erosion	Reduce or eliminate BTF, inspection, and repair.
Eliminate the tight bends and 180-degree bends, if possible, to eliminate the potential of spalled oxide accumulation.	Short-term overheating	Eliminate BTF.

Reheaters

Reheater steam pressure is substantially lower than superheater steam pressure. Stratification of gases becomes less of a concern because the secondary superheater acts as a distribution baffle. However, reheaters are exposed to different problems than those of secondary superheaters. Reheater tubing is usually susceptible to corrosion from the inside. This corrosion starts when a unit experiences a prolonged outage. Oxygen attacks the tubing where moisture has settled in low spots or at the bottom of pendants. Several utilities have used stainless steel material in these regions to battle pitting problems in the past. The stainless steel is subject to stress corrosion cracking in these regions. Then the stainless steel material has been changed again to high alloys such as T9. In order to decelerate the corrosion of reheaters, it is necessary to try to keep moisture and oxygen out of the reheater sections. This can be accomplished by installing isolation valves or blanks and either flooding the reheater with demineralized water or pressurizing it with nitrogen. Adding to the corrosion problem is the sagging or distortion of horizontal runs of reheater tubing. These low spots create ideal locations for moisture to accumulate and corrosion to occur. Sloped reheaters are potential upgrades that help minimize locations for water to collect. The design enhancements, which can be implemented to address reheater tube failure mechanisms, are summarized in Table 5-3. Table 5-3 also lists the potential benefits for these design enhancements.

Table 5-3
Design Enhancements to Improve Reheater Tube Failures

Design	BTF Mechanism Addressed	Benefits
Properly select furnace and convective pass design parameters (FEGT). Select arch geometry, tube spacing, and other critical parameters and dimensions to address fouling and erosion problems. Consider the life cycle cost in decision making.	Sootblower erosion, fireside corrosion, long-term overheating, fly ash erosion	Increase the baseline reliability. Reduce slag buildup. Reduce or eliminate BTF. Provide operation flexibility.
Design welded attachments properly to reduce local stresses and to ensure fail-safe. Use slip connections or nonwelded devices for tube alignment, if possible.	Fatigue	Reduce or eliminate BTF, inspection, and repair.
Select proper DMW joint locations and provide adequate support design to reduce the tube stresses. Use shop-welded DMW joints, proper welding detail design, and welding fillet metal to reduce the residual stresses and to increase the joint strength.	Dissimilar metal welds	Reduce or eliminate BTF, inspection, and repair.
Select proper material and provide conservative design. Do not use stainless steel material at the lower vertical section due to potential of water condensation during the shutdown condition.	Fireside corrosion, long-term overheating, pitting, and stress corrosion cracking	Eliminate BTF.

Table 5-3 (cont.)
Design Enhancements to Improve Reheater Tube Failures

Design	BTF Mechanism Addressed	Benefits
Design sloped horizontal sections to drain the condensation water.	Pitting	Eliminate BTF.
Provide conservative design and material selection.	Long-term overheating	Eliminate BTF.
Design the system properly to avoid the fluid-induced vibration. Provide adequate supports to reduce the tube stresses and prevent tube contact and impact during operation.	Fatigue, rubbing tubes/fretting	Eliminate BTF.
Perform CFD evaluation and/or CAVT to properly design baffles and/or screens to reduce the flue gas local velocity.	Fly ash erosion	Reduce or eliminate BTF, inspection, and repair.
Evaluate the fuel ash characteristics and select the suitable cleaning medium (air, steam, or water). Provide adequate numbers of sootblowers. Arrange the sootblowers properly to provide adequate coverage for cleaning.	Sootblower erosion	Increase the cleaning efficiency and effectiveness. Reduce or eliminate BTF.
Eliminate the tight bends and 180-degree bends, if possible, to eliminate the potential of spalled oxide accumulation.	Short-term overheating	Reduce or eliminate BTF.

6
HEADERS

Background

Headers are used as devices to either distribute fluid to individual tubing or to collect fluid from multiple tubes. Headers provide distribution or mixing functions and are an integral part of boiler pressure systems. Normally, headers are not located in the flue gas stream with the exception of certain low-temperature headers. Sometimes the headers are classified into low-temperature and high-temperature headers, depending on the operating temperatures and whether the header is below or above the material creep range. The primary concern is the high-temperature headers due to the potential damage of creep, fatigue, and creep-fatigue interaction. The high-temperature headers usually require thicker header walls. There are many headers in a typical fossil plant, depending on the design. The typical headers include:

- Economizer inlet and outlet headers
- Drums
- Mud drums
- Waterwall lower headers
- Primary superheater inlet headers
- Secondary superheater inlet and outlet headers
- Reheater inlet and outlet headers

The majority of header problems occur at the secondary superheater outlet header, which is subjected to high-pressure and high-temperature conditions. The secondary superheater outlet header is a thick wall header, which is subjected to high thermal stress. The damage mechanisms involve both fatigue and creep. The secondary superherater outlet header is considered as one of the most vulnerable headers in the boiler system. Other equally vulnerable headers include economizer inlet headers and seam-welded headers or piping, if any. Discussion will focus primarily on the secondary superheater outlet header. A brief description of other headers will be made first.

Economizer Inlet Headers

Economizer inlet headers became vulnerable components under the mode of cycling operation. In the last fifteen years, EPRI has addressed a problem with economizer headers in cycling units, which are “bottled up” at night for quick starting the next morning. As the temperature inside the

boiler decays, water must be introduced to maintain the drum level. Because the water line to the economizer could be substantially cooler than the header, which is typical in the boiler, a thermal/corrosion fatigue mechanism is created, and cracking has been found in many units, requiring a run/replace decision. EPRI has recommended several solutions to the problem, treating the root cause by limiting the severity and number of thermal/corrosion fatigue cycles.

Creep damage in carbon steel economizer header drums is not a factor because temperatures are too low. Corrosion is a potential problem, and units that have been acid cleaned many times in their life cycle can experience corrosion-related problems with welded connections and inlet line attachments. Thermal fatigue is a potential damage mechanism in economizer inlet headers, much like other low-temperature headers. Units that cycle frequently (especially if force cooled to deal with boiler tube leaks) are subjected to high local stresses around economizer tube penetrations, which can, in combination with corrosion, initiate fatigue damage. Combined, the thermal/corrosion effects of fatigue have been severe enough to cause cracking in the header that necessitated replacement.

An inspection of the economizer inlet header should be conducted after 10 to 15 years of service. The most important locations are the stub tube penetrations nearest the inlet line connection, as well as the inlet line penetration. Stub tube welds should be examined from the OD of the header for signs of fatigue cracking.

Steam Drums

Steam drums are used in subcritical boilers for separating steam and water mixtures. Actual failures of steam drums are very rare, but the consequences are severe because repairing or replacing a steam drum can take many weeks to months because welds have to be fully stress-relieved in place. In the 1960s, a new drum failed catastrophically during a hydrotest. The culprits were a weld defect and very cold water used for the hydrotest, reducing the fracture appearance transition temperature (FATT) of the drum material (hence the fracture toughness) to the point where a small defect could propagate. The critical nature of the drum with respect to extended outages makes periodic inspection of the drum critical to a well-managed maintenance program.

Because the saturation temperature of steam is 700ºF (371ºC) or less, creep damage in carbon steel drums is negligible. Corrosion is a potential problem, and units that have been acid cleaned many times in their life cycle may experience corrosion-related problems with drum internals and possibly welded connections and tube (downcomer) stubs. Thermal fatigue is a potential damage mechanism in drums, much like headers. Units that cycle frequently (especially if force cooled to deal with boiler tube leaks) are subjected to high local stresses around discontinuities and also to global stresses due to drum “humping.” Because of the large size of the drum and top-to-bottom thermal differences, the stresses created on tube and downcomer attachments can be high enough to initiate fatigue damage. Combined, the thermal/corrosion effects of fatigue have been severe enough to cause cracking in a drum, which necessitated replacement.

Drum internals need to be visually examined on a periodic basis set by the utility/insurer/state regulatory board. This may involve removing internals to ease the inspection process, especially

if other work is scheduled. All attachments, downcomer and stub tube penetrations, and girth and longitudinal welds should be inspected from inside the drum. Volumetric inspection of girth welds should be considered if there have been many incidences of poor chemistry control during acid cleaning and/or normal operation.

Mud Drums

Mud drums are a component in a subcritical boiler for collecting the separated solids from the main drum for blowdown at a later date. Mud drums may not be used in a newer design. Failure or leakage of mud drums is very rare, but the consequences are severe because repairing a leak in a mud drum can take many weeks to months because welds have to be fully stress-relieved in place. The critical nature of the mud drum with respect to extended outages makes periodic inspection of the mud drum critical to a well-managed maintenance program.

Because the saturation temperature of steam is 700ºF (371ºC) or less, creep damage in carbon steel mud drums is negligible. Corrosion is a potential problem, and units that have been acid cleaned many times in their life cycle may experience corrosion-related problems with welded connections. Thermal fatigue is a potential damage mechanism in mud drums, much like steam drums and headers, but it is not as common.

All attachments, tee connections, downcomer and stub tube penetrations, and girth and longitudinal welds should be inspected from inside the drum. Volumetric inspection of girth welds should be considered if there have been many incidences of poor chemistry control during acid cleaning and/or normal operation.

Lower Waterwall Headers

The lower waterwall headers take water from the drum and mix it prior to entering the waterwalls. They operate at saturation temperature and are not usually a cause of forced outages. The OD can be exposed to some high temperatures from the lower furnace, and this temperature gradient can cause problems. As with all boiler pressure components, they are designed to Section I of the ASME code. Creep damage is not a damage mechanism in these headers, but the large temperature gradient can cause some creep fatigue damage on the OD surface. Thermal fatigue is an operative mechanism, particularly on the waterwall tube to header welds. The ID of the header will be exposed to acids during the cleaning process, which can cause corrosion of existing defects, pitting, and so on.

Primary Superheater Headers

Low-temperature headers operate at temperatures below the material creep range, and creep damage is not common. One of the exceptions is the primary superheater. Because steam temperature is controlled by attemperator spray, which is located after the primary circuit, on some occasions temperature can increase to as high as the secondary circuit, with no operator warning. This is often the source of problems in the primary circuit. Thermal fatigue is the

leading cause of damage in these headers. Units that cycle frequently (especially if force cooled to deal with boiler tube leaks) are subjected to high local stresses around discontinuities and to global stresses due to header "humping."

Attemperators/Desuperheaters

Attemperators or desuperheaters are divided into two types: water and steam. Water is the more widely used in modern boilers. The desuperheater essentially is a heat exchanger, which is relatively slow in response to system needs. Usually located between the primary superheater outlet and secondary superheater inlet headers, attemperators have been known to fail and send pieces downstream, where they can interrupt the flow of steam and lead to tube failures. Because the water used to cool the steam flow is of relatively low temperature, attemperators and desuperheaters are designed with shielding devices to prevent the cool water from impinging directly on the hot boiler piping. Most attemperator problems are usually associated with the cracking and failure of the shielding devices.

The thermal shocks associated with the introduction of cooling water into the attemperator can often cause thermal fatigue after many years of operation. Liners can also warp, which can interrupt steam flow and may cause the liner to vibrate and fail in high-cycle fatigue. Creep and creep/fatigue damage may also occur in the welds in the boiler piping due to the high steam temperatures and stress-concentrating effect of the weld.

The main welds that connect the attemperator to the boiler piping should be examined periodically for evidence of creep or creep fatigue. The water nozzles and liners should be examined for thermal fatigue cracking and/or high-cycle fatigue.

Stresses in Headers

Discontinuity Stresses

In thick wall components such as headers, thermal stresses and cyclic stresses due to pressure and temperature variations are the main considerations. Typical headers are made with a cylindrical shell with end enclosure heads of shapes such as hemispherical, torispherical, elupsoidal, or flat heads. When a cylindrical shell is subjected to internal pressure away from the end enclosure, hoop stresses along with the longitudinal in-stress (equal to half of the hoop stress) are engaged. However, local forces and moments are induced in areas of structural discontinuity such as at the junction of the cylindrical shell and end enclosures under the normal steady-state pressure loads. An area of discontinuity would be, for example, the intersection of a cylindrical shell and a hemispherical head. This can best be visualized by assuming that the shell and head act as separate units with internal pressure applied to the individual, simply supported parts (see Figure 6-1). Because the displacements of the components differ, shear forces and moments must be applied at the edges to maintain the displacement and slope compatibility. The resulting stresses induced by these shear forces and moments are termed "discontinuity stresses." The bending stresses reach a maximum at, or near, the discontinuity, but they attenuate with distance from the joint. The similar local stresses can be produced at the concentrated load

locations (such as lugs), openings, welded locations, at locations with geometry change, or any nonuniform loading and thermal patterns. Any condition or geometry that has the chance to alter the cylinder to maintain the perfect circular shape in cross-section will produced local stresses. These local stresses are considered secondary in accordance with the ASME code design philosophy and are not considered in Section I of the code. The actual conditions have discovered damage/cracking at many high local stress locations, which indicates that additional effort is required to prevent these damage/cracking to occur. One method is to perform detailed analysis to consider these local stresses in accordance with criteria in Division 2 in Section III or VIII of the ASME code with additional code cases such as N47.2. Another method is to perform nonlinearly plastic analysis to determine the "design life" of the new header. The cost of these analyses is relatively high. It has been discussed that there are many uncertainties associated with other factors, such as material properties, fabrication tolerances, and others, so the real component life may not be able to be determined. In Appendix A, it will be shown that a simpler approach, such as using the EPRI BLESS code, can be used to assess new designs and to improve the design life.

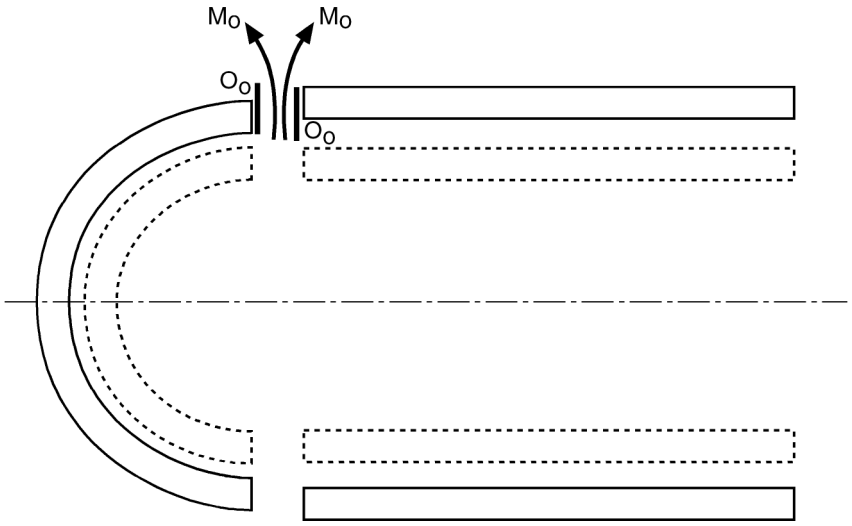

Figure 6-1
Discontinuity Forces at a Head-Cylinder Junction Under Internal Pressure

Thermal Stresses

Temperature changes in a structure usually produce dimensional changes. Thermal stresses develop in a body if the expansion or contraction that would normally result from heating or cooling is prevented by external or internal constraint. In general, thermal stresses can be divided into two categories:

- The geometry of the header body and the temperature distribution within the wall thickness are such that stresses are produced due to an incompatible set of material thermal expansions in the absence of external restraint. A typical example of the self-constraint category is the spherical, or cylindrical, shell with a radial temperature distribution through the wall thickness.

- The stresses in the body are brought about by the constraining action of external forces. An example of thermal stresses caused by external constraint is localized support lugs.

In general, thermal stresses are calculated by first determining the linear and rotational strains that the body would assume if it were free to move and then determining the stresses required to maintain the body in its final equilibrium form. To calculate stresses, the redundant forces and moments must be determined by the appropriate equations of mechanics.

For the steady-state condition, the temperature differences within a body produce strain differences and associated stress differences, which keep the elementary parts of the body in compatibility. The numerical evaluation of stresses and strains caused by thermal loading and their significance to the life of the structure requires knowledge of the behavior of construction materials in design. The theory of elasticity, based primarily on Hooke's law (that stress is proportional to strain), provides a satisfactory approximation to the laws governing the behavior of most materials under applied load. If, however, the material is ductile, and if the temperature and temperature differences are large enough to cause strains above the elastic limit, inelastic yielding and stress relaxation can account for a large portion of the stress-induced deformation. Stresses caused by a sustained mechanical load satisfy the equilibrium criteria that the resulting forces and moments must be balanced by definite stresses in the material regardless of the strain that occurs. However, thermal stresses above the elastic limit must be calculated according to a theory of plasticity.

For the transient thermal conditions, when fluids inside a container change temperature, the walls of the container are subjected to thermal stress. The magnitude of the thermal stress depends upon the rate of the temperature change, the total temperature excursion, the thickness of the material in the container wall, and the film coefficient between the wall and the fluid. For an increase in temperature, a compressive stress will be induced on the inside surface and a tensile stress will be induced on the outside surface. For a decrease in temperature, the signs of the stresses will be reversed. The relative severity of a given temperature transient is judged by the magnitude of the stresses produced by the transient. Because the stress depends on both the rate of change and the total temperature excursion, the condition arises as to which of several expected transients is the most serious.

The thermal yielding produces relaxation of the stresses. The actual condition in conjunction with the creep and fatigue interaction becomes very complex when it involves the cycling-induced high local stresses. Some assumptions must be made. There are several techniques available that have been incorporated into commercial computer software, and detailed evaluations can be made with this software.

Openings

For the headers, the tube penetrations are made for steam entry from individual tubes. For very small circular holes, the theory of elasticity shows that a stress concentration factor of three will exist around the hole under uniaxial tension. The stress concentration is reduced to two for the state of biaxial tension. In a cylindrical shell under pressure, the state of stress is such that the hoop stress is twice the longitudinal stress. Under this condition, the stress concentration at a

penetration would reach a peak of 2.5. The stress concentration effect would be localized at the edge of the hole and could induce plastic deformation with an inherent redistribution of stresses. The ASME code requires an increase of the header thickness based on the areas that are removed by the penetration holes without considering the stress concentrations. In addition, the ASME code requires that for holes larger than a certain diameter, reinforcement to the opening should be added by using a nozzle attachment, an increased shell thickness, or a pad weld of a cover plate.

The rules of the ASME code require that the area removed for the penetration in a given cross section be replaced in the form of reinforcing within specified boundaries. At best this is a crude method. However, experience has shown that the stresses do not cause failure at nozzles, providing that the level of stress in the shell is at a reasonable limit.

Boiler drums and high temperature headers may use forgings for reinforcing around openings to minimize the stress concentration. The geometry of the forging should be analyzed by the finite element methods to minimize the stress concentration.

High-Temperature Header Damage Mechanisms

High-temperature superheater and reheater headers have been a necessary focus of the boiler condition assessment activities in the last decade. Experience coupled with improved inspection methods and advanced analytical techniques has permitted the determination of the remaining useful life of these high-temperature headers [66]. The utility industry started investigating the superheater outlet header problems as early as 1982. Initially, the cracked headers were made up of only 1-1/4Cr-1/2Mo alloy material (SA-335 P11). Creep-related failure in SA-335 P11 material could be explained in part by changes in the ASME code. In 1968, the stress allowed by the code for 1-1/4Cr-1/2Mo was reduced for high-temperature applications. The allowable stresses at 1000°F (538°C) and 1050°F (566°C) were reduced 16% and 26%, respectively. As a result, headers and piping designed during the 1950s and early 1960s had the potential to be under designed. As the focus was placed on high-temperature headers, cracks in headers made of 2-1/4Cr-1Mo alloy material (SA-335 P22) were also found. It was clear that the mechanisms leading to the cracking of these headers could not be explained by simple creep. Several programs were sponsored by EPRI to investigate causes of header damage, inspection methods, and analysis techniques to determine the remaining life of these headers.

High-temperature headers that most often experience significant degradation are the superheater outlet headers that operate at temperatures near 1000°F (538°C), which are well within the creep regime. Creep is the phenomenon in which the material experiences inelastic strain accumulation that depends upon sustained stress at relatively high temperature with extended time factor. The high-temperature headers have a finite life due to creep. Boiler cycling operation introduces additional damage mechanisms of oxide notching and fatigue. These damage mechanisms, acting together, can significantly reduce the service life of a header.

Figure 6-2 illustrates locations where cracking is most likely to occur in high-temperature headers, and include:

- Tube-to-header weld
- Circumferential weld
- Longitudinal weld
- Lug weld
- Drain weld
- Handhole fittings
- Radiographic testing (RT) plug weld
- Nozzle weld
- Thermowell weld

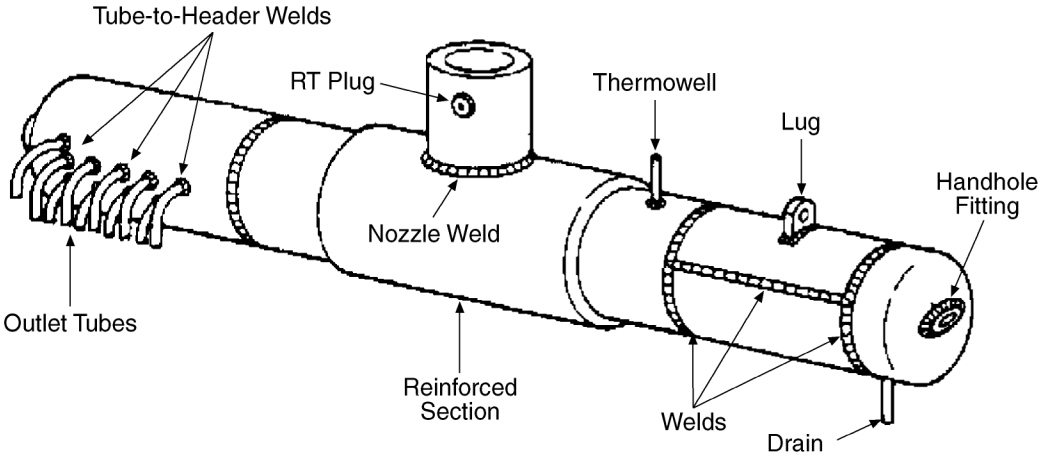

Figure 6-2
Header Locations Susceptible to Cracking

Some of the specific damage and failures experiences of the high-temperature headers include:

- Severe cracking was found in the 1980s in the ligament areas of older headers, which led to leaks at the stub-to-header welds. These incidences of leaks prompted an industry-wide inspection program, which showed that a large percentage of headers were found to contain ligament cracking after more than 15 years of service.
- Service-induced cracking has been widely experienced in outlet nozzle saddle and girth welds. This damage has been thermal fatigue induced, resulting in ID cracking at weld counter bores and external creep cracking of welds and associated heat-affected zones.
- Numerous penetration welds have cracked from creep and thermal-fatigue damage, resulting in RT plug failures, stub tube leaks, and drain line leaks.

- Distress has been detected in base metal components of these headers: header spools experiencing creep swelling, ID cracking in tee bodies, wall wastage in stub tubes from gas impingement and oxide exfoliation, and stub tube failures from creep damage.
- Base metal distress has often been associated with improper material selection or localized high component temperatures.
- Failures of header support components have been documented as a result of improper material selection or incorrect design.

Cracking has been found to occur at virtually almost every weld. Early identification and assessment of this damage is most critical to decisions regarding the long-term reliability and cost to maintain boiler steam generation. Table 6-1 lists component location, potential damage mechanisms, and NDE detection and characterization techniques for typical high-temperature headers [67]. The information was generated for the purpose of condition assessment of the existing headers. However, the designer should focus efforts on these vulnerable components and locations. Certain NDE techniques listed can also be used for baselining and/or to detect the potential original fabrication flaw at selected vulnerable components and locations.

Table 6-1
High-Temperature Header Potential Damage/Failure Locations and Mechanisms

Location	Damage Mechanisms	NDE Detection Techniques	Characterization Techniques
Body spool pieces	Creep swelling, temper embrittlement, thermal softening	Dimensional, replication, hardness testing	Replication, chemical analysis
Tee body	External creep cracking, internal thermal fatigue cracking	Video-probe, conventional UT, focused UT, time-of-flight diffraction UT, radiography	Focused UT, time-of-flight diffraction UT
Ligament regions	Thermal fatigue, cracking in boreholes and at corners	Dimensional, video-probe, penetrant testing, conventional UT, focused UT, time-of-flight diffraction UT, eddy current testing	Focused UT, time-of-flight diffraction UT, acoustic emission
Girth welds	External creep damage, internal thermal fatigue cracking at counter bores	Penetrant testing, magnetic particle testing, conventional UT, time-of-flight diffraction UT, radiography, replication, hardness testing, chemical analysis	Focused UT, time-of-flight diffraction UT, acoustic emission, replication, chemical analysis, alternating current (AC) potential drop
Seam welds	Creep cracking	Penetrant testing, magnetic particle testing, conventional UT, focused UT, radiography, replication, hardness testing, chemical analysis	Conventional UT, focused UT, radiography, replication, chemical analysis
Saddle welds	Creep cracking	Penetrant testing, magnetic particle testing, conventional UT, time-of-flight diffraction UT, radiography, replication, hardness testing, chemical analysis	Focused UT, time-of-flight diffraction UT, acoustic emission replication, chemical analysis, AC potential drop

Table 6-1 (cont.)
High-Temperature Header Potential Damage/Failure Locations and Mechanisms

Location	Damage Mechanisms	NDE Detection Techniques	Characterization Techniques
Stub tubes	Creep swelling, thermal softening, internal thermal fatigue cracking	Visual inspection, dimensional measurements, UT thickness measurements, UT oxide measurements, replication	Dimensional measurements, UT thickness measurements, UT oxide measurements, replication
Stub tube welds	External creep cracking, weld root creep cracking	Penetrant testing, magnetic particle testing, conventional UT, focused UT, radiography, replication, hardness testing, chemical analysis	Conventional UT, focused UT, radiography, replication, chemical analysis
Drain line penetra-tions	Internal thermal fatigue cracking, internal thermal shock cracking, external creep fatigue cracking	Video-probe, conventional UT, focused UT, radiography	Focused UT, radiography
RT plug and thermo-well welds	Creep cracking with bimetallic welds, creep cracking	Penetrant testing, magnetic particle testing, radiography, replication, chemical analysis	Radiography, replication, chemical analysis
Supports	Creep cracking, thermal softening	Visual inspection, penetrant testing, magnetic particle testing, replication, chemical analysis	Replication, chemical analysis

Ruinous failures of thick-walled components such as drums, headers, and piping have been rare. One of the exceptions is seam-welded hot reheat steam piping, which is addressed in a later section. The possible failure modes depend on the initial unit design and subsequent operational modes. Component damage can arise from both steady-state and transient boiler operation. Experience has shown that the majority of distress seen in thick-walled components has been due to accumulated creep and fatigue damage. Steady-state operation most often causes damage in the time-dependent regime where material creep properties control damage rates and material life. Transient operation can cause damage in a time-independent regime as well as the time-dependent regime.

Component distress is manifested in the form of surface cracking. Creep cracking has been known to occur in the welds and weld heat-affected zones at the outside diameter of headers and tees. The welds and heat-affected zones of header socket welds are also susceptible to such cracking.

Long-term creep damage in the welds and heat-affected zones of low-alloy ferritic material is characterized by cracking along the grain boundaries. At the onset of this type of damage, cavitation voids form in the grain boundaries of the material. As the cavitation process progresses, the number of voids increases until microcracks are nucleated. Fatigue cracks due to thermal cycling normally occur at the inside surface of thick-walled pressure pans where thermal transient effects are greatest. Fast transients (thermal shocks) cause a substantial amount of material plasticity to occur in the component. When the transient conditions are terminated, the material is left in a state that includes residual stresses. The repeated application and relaxation of these residual stresses have been known to cause stress rupture failures in heavy walled piping.

Numerous incidents have been reported of header cracking caused by water quenching the drain line stub borehole and header ID, especially reheater headers. This problem occurs when drain lines from boiler, superheater, and reheater headers of a single unit or of multiple units are connected to a common blowdown tank. The quenching may result in cracks in welds, boreholes, or other sections of the headers. During startup and normal operation, the blowdown tank experiences unit operating pressure. Because the reheater operates at a much lower pressure than the boiler or superheater, faulty or unclosed drain valves could allow water from the blowdown tank to flow back up to the reheater header through the drain line and header drain line borehole. This backflow of water from the drain line could be at a much lower temperature than the header itself and could subject the header, the drain line, and the drain line borehole to thermal shocks, which can cause cracks. Craze cracks can form directly downstream of the drain and can be recognized by an “elephant-hide” appearance on the inside diameter of the component. The cracks emanating from the drain borehole typically appear as radial cracks, which could extend through the header wall and result in drain stub leaks. Header damage can also be classified as repairable or nonrepairable.

Repairable Header Damage

Repairable damage consists of cracks or other damage that can be weld-repaired. This can include cracking of welds at support lugs, support and torque plates, branch connections such as drain line and vent line welds, the outlet nozzle welds and header girth welds, radiograph plugs, handhole cap welds, and tube stub-to-header welds. The most frequent incidence of cracking that leads to steam leaks is in tube stub-to-header welds. Local differences in yield strength and creep strength within the different constituents of the various weldments can produce metallurgical notch effects. Global differential creep rates along with the notch effects of strain concentration can be detrimental at areas of low ductility that may exist within the weldment.

Header cracking at outlet nozzle-to-header welds, outlet nozzle-to-pipe welds, and support plate welds can indicate that additional driving forces or stresses beyond the pressure stress are

occurring. The standard tee nozzle design with its large saddle weld has been prone to cracking as a result of excessive loads placed on the outlet nozzle by the piping system. The large welded nozzle can be eliminated by upgrading to a forged design. Piping load shift and piping can lead to excessive loads being imposed on the outlet nozzle and support system of the superheater and reheater outlet headers. These excessive forces from the piping system produce stresses that lead to crack initiation on the OD welds of the header. In high-temperature headers, cycling leads to fatigue crack initiation. In addition to the outlet nozzle damage, fatigue can cause cracking at the support welds, branch connections, girth welds, and tube leg welds. During cold startup of the boiler, the superheater headers are subject to humping as a result of top-to-bottom temperature differences. This humping imposes stresses on the various attachments and supports. The thermal expansion of the superheater outlet headers will place bending stresses on the outlet tube legs. Cyclical bending stresses have caused cracking in the outlet leg tube stub-to-header welds. For drain line connections, on/off cycling can lead to severe localized damage to the header as a result of thermal shock. In plants where more than one boiler or header are tied to a common blowdown tank, it has been found that condensate can sometimes back up through drain lines and enter a hot header during startup. The resulting thermal shock can cause fatigue damage to the header immediately adjacent to the drain connection.

Many of the indications or cracks associated with creep or fatigue (including thermal shock) as described here can be repaired. Although local repairs are possible, the presence of damage in many areas coupled with the presence of creep and the owner's experience with forced outages might dictate that header replacement is the best course of action.

Nonrepairable Header Damage

In recent years, the utility industry has recognized ligament and borehole cracking as a significant, life-limiting problem in headers subjected to elevated temperature service. Ligament cracking is most frequently found in secondary (or finishing) superheater outlet headers. Severe ligament cracking, requiring header replacement, has occurred in both 1-1/4Cr-1/2Mo (SA-335 P11) and 2-1/4Cr-1Mo (SA-335 P22) headers.

As a consequence of the through-wall temperature differences and the temperature differences between individual outlet legs and the bulk header steam temperature, the header experiences localized stresses much greater than the stress associated with steam pressure. Further, during increasing and decreasing load changes, the reversal of the through-wall temperature differences and the reversal of individual tube leg steam temperatures relative to the header cause reversal of corresponding stresses at the borehole penetrations. These increased and reversing stresses further contribute to the initiation of cracks in the header along the borehole penetrations, which eventually lead to premature header end of life. Ligament cracking generally initiates as numerous longitudinal cracks in tube boreholes. These cracks extend to the inside surface of the header, appearing as a "starburst" pattern when viewed from the inside of the header. Some of these cracks continue to grow along the inside surface of the header, eventually linking up with similar cracks emanating from adjacent tube boreholes. These cracks continue to propagate, growing simultaneously from the header ID toward the OD and between adjacent boreholes.

The thermal cycling that results from on/off operation accelerates both the initiation and propagation of ligament cracks. Two mechanisms are believed to be responsible for the initiation of the cracks: oxide notching and borehole ligament cracking.

- Oxide notching. High-temperature steam in contact with alloy material produces oxidation in the low-alloy header materials, which forms a brittle oxide scale layer. The oxide layer grows in thickness over time. Because the oxide layer is relatively brittle, it is normal for the oxide to begin to crack and/or spall. Cracking of the oxide layer due to the temperature and strain cycles exposes the header base metal to oxidizing steam, reestablishing the initial high rate of oxidation. This process continues over time, eventually forming a notch for crack initiation.
- Borehole ligament cracking. This mechanism is a combination of localized creep and thermal fatigue damage. These damages are the result of the significant thermal stresses that are typically incurred during cycling operation for the thick wall components. The geometric discontinuity of the borehole compounded with the high local temperature and tight ligament spacing make the ligament one of the weakest locations in the high-temperature headers.

The ligament area is a critical area in the header. Past designs had both radial and non-radial outlet stub arrangements, which were relatively closely spaced. The ligament area can be made more resistant to crack growth, significantly extending the header life, by increasing outlet leg spacing. This reduces the localized hot spot on the header associated with specific outlet leg upset temperatures and reduces thermal stresses. The larger ligament is also more resistant to creep crack growth. Instead of a standard socket weld arrangement, a full penetration tube-to-header weld provides less stress concentration and better heat transfer.

ASME Header Design

Header design is governed by Section I of the *ASME Boiler and Pressure Vessel Code* [69,70]. Design criteria include analysis for minimum wall requirements to account for pressure stresses, areas of reinforcement, and ligament size and spacing. Many headers in the fossil power plant are subject to high temperature and pressure, which can lead to cracking and failure. The ASME code header design of opening is an area replacement concept, and the stress concentration is not considered in the design. Unless specified in the technical specification, cycling conditions are not normally considered in the headers by the boiler manufacturers. The rationale of the ASME design is that the local stress is secondary and self-limiting. Stress/strain redistribution and relaxation may take place at the high operating temperature. Overall header design is a very complex problem that must consider ligament spacing, borehole cracking, heat transfer adequacy, strength requirements from the base metal weld, heat-affected zone, corrosion hideout, cycling constraint forces, stress concentration due to geometry, and fabrication practices.

Header Analysis by BLESS

A boiler header is a complicated three-dimensional (3D) structure. The detailed calculation of temperature and stress distributions is a formidable, time-consuming task, requiring 3D finite element analysis techniques. It is also required to address both the time-independent (plasticity) and time-dependent (creep) inelastic behavior of the header material in order to obtain realistic

damage estimates. Thus, a detailed finite element analysis further requires that nonlinear material behavior be included. It is generally not practical to perform those detailed 3D nonlinear finite element analyses for a complete boiler service history.

The EPRI BLESS code greatly facilitates the life assessment of elevated temperature headers and piping by eliminating the need for finite element thermal and stress analyses and using nonlinear creep-fatigue crack growth technique [66,71]. Making the solution of this problem practical requires that some simplifying assumptions be made. Appropriate simplifying assumptions were made in the development of the BLESS code. The primary simplification of the BLESS code is that the transient temperatures and stresses are based on a simple thick-walled cylinder model. The temperatures and stresses vary only through the wall in this one-dimensional (1D) model. Stress and temperature predictions of this 1D model are representative of the conditions far removed from the local effects of the boreholes. However, the temperatures and stresses from the 1D model are modified in BLESS to represent the important features of the actual temperatures and stresses at critical areas of the specific header geometry. The 1D temperatures and stresses are modified using closed-form empirical equations that were developed using the results of detailed 3D linear finite element analyses of several headers subjected to various transient and steady-state operating conditions. This approach becomes very practical when only those features essential to the crack initiation and propagation models are considered. The models included in the BLESS code analysis are:

- Oxide notching model
- The creep-fatigue (time and cycle fractions) initiation model
- The creep crack growth and fatigue crack growth models

In the case of header seam welds away from ligaments, the 1D temperature and stress solutions are adequate without empirical modifications. In the case of header girth welds, stresses due to nozzle and support loads can be important but are not calculated by the BLESS code. In piping systems, the restraint of thermal expansion stresses generally dominates the failure of girth welds. The BLESS code does not perform a piping analysis to determine the system stresses. Evaluation of restraint of thermal expansion (and deadweight) bending moments in piping must be made outside of the BLESS code and serve to define an equivalent load-controlled membrane stress input to BLESS. The influence of creep on piping bending moments should be considered.

The estimated remaining life is calculated by BLESS either as a single value (when run in the deterministic mode) or a statistical distribution. This distribution is obtained when BLESS is run in the probabilistic mode and defines the probability of failure as a function of time. Such information can be useful in making run/repair/replace and reinspection decisions for aging or cracked headers and piping.

The BLESS code can also be used to evaluate the new header design, especially in the ligament area. The major benefit is that the new header can be sized with proper borehole orientation and ligament spacing to reduce the potential of nonrepairable header damages.

Header Upgrades

The problems experienced in high-temperature headers have led to upgrades and improvements that make the headers less susceptible to the problems of creep, thermal fatigue, and creep fatigue [66,75]. Many design improvements can be made for high-temperature headers to minimize the areas where problems initiate. Utility companies are likely to anticipate future changes in the operation of the boiler, such as cycling, so that these changes can be taken into account in the design. The design improvements include the following:

- The standard tee nozzle design with its large saddle weld has been prone to cracking as a result of excessive loads placed on the outlet nozzle by the piping system. The large welded nozzle is eliminated by upgrading to a forged design in which the tee section has no large saddle weld (see Figure 6-3).
- The ligament area is a critical area in the header. Past designs had both radial and nonradial outlet stub arrangements, which were relatively closely spaced. The ligament area can be made more resistant to crack growth, significantly extending the header life, by increasing outlet leg spacing. Upgraded header designs have side-spaced outlet legs with the resulting larger ligaments (see Figure 6-4). This reduces the localized hot spot on the header associated with specific outlet leg upset temperatures and reduces thermal stresses. The larger ligament is also more resistant to creep crack growth. In addition to wider spacing, an enhancement can be made to the design of the stub weld itself. Instead of a standard socket weld arrangement, a full penetration tube-to-header welds and chamfered ID corners provide less stress concentration and eliminate the notch associated with lack of fusion in the stub design (see Figure 6-5).
- Thermal sleeve stub design can be use for the drain line or tube stub if the cost can be justified (see Figure 6-6).
- The greatest increase in the service life of high-temperature headers can be achieved by material substitution. The modified 9Cr-1Mo steel has considerably greater creep and rupture strength properties than conventional 2-1/4Cr-1Mo, offering the capability to dramatically increase header life.

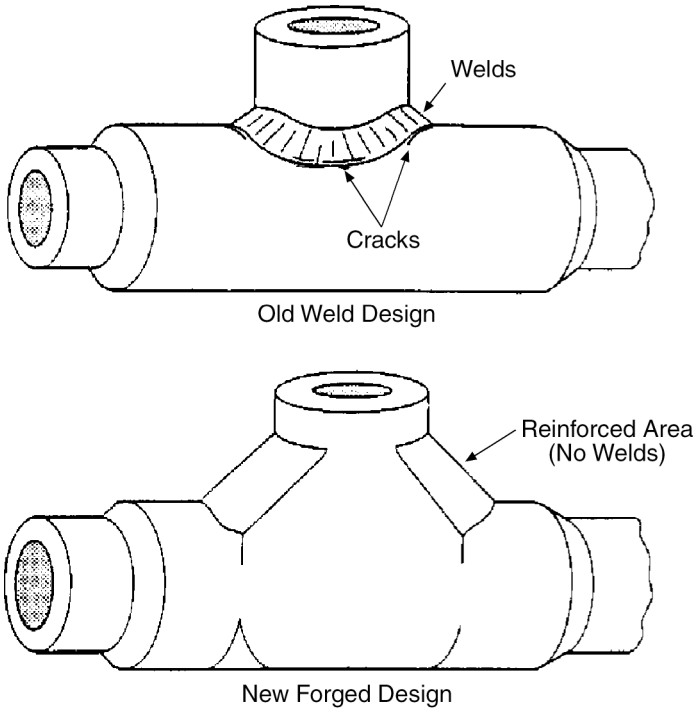

Figure 6-3
Forged Outlet Nozzle Replaces Tee Section Weld

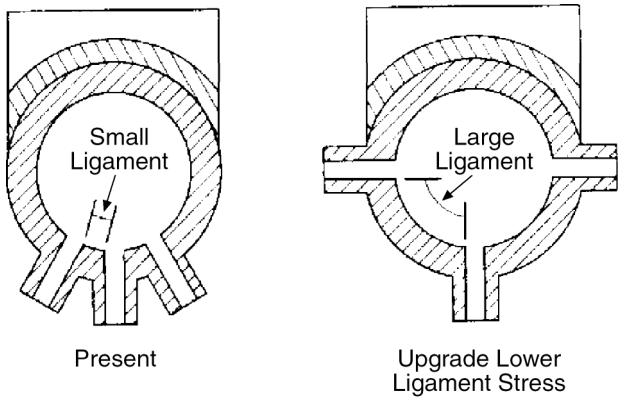

Figure 6-4
Increased Ligament Size for Increased Life

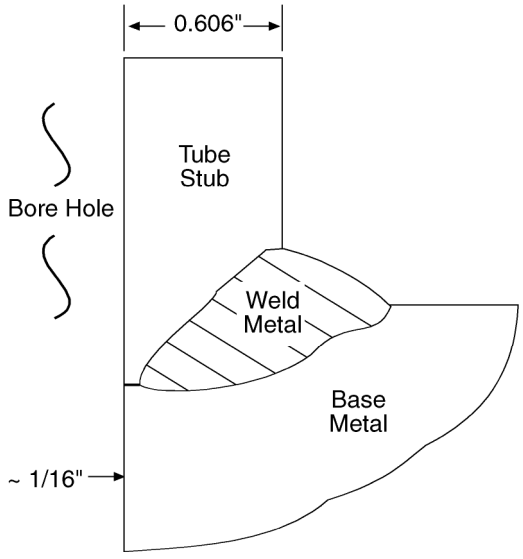

1 in. = 25.40 mm

Figure 6-5
Original (Left) and Modified Tube Stub Welds

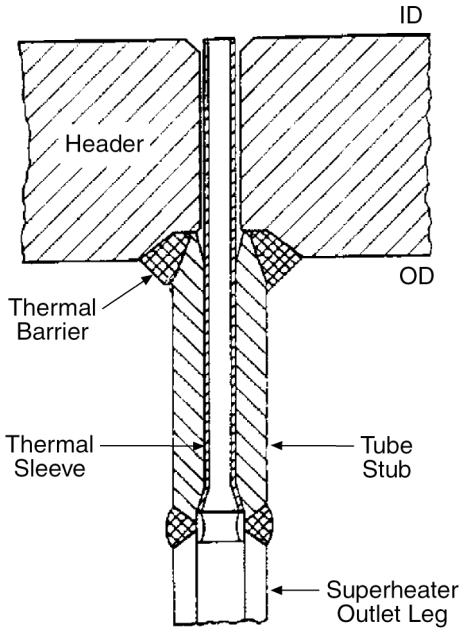

Figure 6-6
Retrofitted Thermal Sleeve Reduces Stress

Case Example

One example is presented in this section, and more descriptions can be found in Appendix A.

Units Description

ABC Fossil Plant Units No.1 and No. 2 are equipped with 1300-MW supercritical boilers and began initial operation in the 1970s. Each boiler has a design rated steam flow of 9,300,000 lbs/hr (4,218,000 kg/hr) at a steam pressure of 3500 psig (24.1 MPa) and temperature of 1000°F (538°C). There are two superheat outlet headers on each unit. Each of the headers has 73 rows of tubes with 10 tubes in each row. The tubes enter the header symmetrically about the vertical centerline of the header using a 15° ligament spacing. There are two discharges from each header at the quarter points. The two outlet lines from each header intersect outside the boiler at a connection tee where the steam piping system begins. The headers are fabricated from 2.25% chrome, 1% moly material. The quarter point discharges from the header are fabricated from pipe with the discharge nozzle attached by welding. The header pipe has a 23.75-in. (60.33-cm) outside diameter with a 5-in. (65.41-cm) minimum wall thickness and the thickened run for the fabricated tee is a 25.75-in. (65.41-cm) OD with a 6-in. (15-cm) minimum wall thickness. The total length of each header is approximately 111 ft (33.8 m). There are three tube connections on the front header and one connection on the rear header for the secondary superheater steam-cooled spacer tubes. The routing of these tubes is different from the other tubes entering the header. The steam-cooled spacer tube inlet starts from the bottom of the superheat inlet header and terminates at the outlet header. The length of the run of these tubes inside the furnace convection pass is much shorter than the other tubes.

Header History

The major problem areas include the tube stub cracking, the ligament and borehole cracking, and the main steam outlet tee cracking.

Tube Stub Cracking

The first tube stub leak discovered on Unit 1 in 1979 was followed by leaks in 1983 and 1986. The first tube stub leak on Unit 2 occurred in 1983. Between the years 1987 and 1990, a total of 1250 reportable indications were found on the headers of both units by using dry-penetrant technique. These cracks were weld repaired prior to the unit being returned to service from each outage. Some tube stubs had been completely replaced. Through 1990, there were 48 tube stub failures on Unit 1 that resulted in 13 forced outages. On Unit 2, during this same time period, there were 28 tube stub failures that resulted in 17 forced outages. The cracking was concentrated in the areas near where the steam-cooled spacer tube attached to the header. In 1983, two samples were taken from the Unit 2 front header. One sample contained a crack at the stub-to-header weld junction, and the other contained an entire tube stub. The crack in the tube stub was found to be transgranular and occurred at the base metal to stub weld metal interface. The cracks were found to contain large amounts of oxide. In 1985, a metallurgical analysis of a

failed tube stub that occurred on the Unit 2 front header was performed. This analysis indicated a lack of penetration and lack of fusion in the root pass of the original weld. The primary contributor to tube stub cracking problems is related to the original welding geometry. The original design is shown in Figure 6-5. A finite element thermo-elastic transient and creep analysis of the header stub connection was performed, and the results verified a relatively short life expectancy [71]. Also, several of the original tube joint failures were caused by poor welding during the original fabrication header bowing during thermal transients increased the tube leg stresses. This condition was aggravated by the high number of unit operating cycles mainly from excessive startups during early years of unit operation.

Header Shell and Borehole Cracking

In 1987, an inspection of the Unit 1 front and rear header boreholes was conducted. A total of 20 locations were selected. Nine of the 20 boreholes inspected were found to be cracked. The most significant crack was found to extend 1.4 in. (3.6 cm) down the borehole and 1/2 in. (1.3 cm) deep along the OD surface. The cracking was reported to extend circumferentially between boreholes in some locations. In March of 1990, longitudinal flaws were found on the inside surface of the header material. Three areas along the length of the header were found to be cracked. The worst area had the estimated crack depth varied along its length between 1% and 13% of the wall thickness. The flaw was approximately 54 in. (137 cm) long and was located near the bottom dead center of the header. The evaluation of the cracks was conducted using the BLESS computer code [76]. The results indicate that there were no immediate safety concerns. The flaws were reinspected in 1991 and did not demonstrate any significant change in depth or length. Reportable indications were also found by ultrasonic techniques in a header girth weld. Twelve indications were noted on a Unit 2 girth weld ranging in length from 1–15 in. (2.5–38 cm) with an estimated maximum through-wall thickness of 6%. All the indications occurred near the top of the header, and the majority of the indications were not surface cracking. The ligament cracking could have been caused by creep, fatigue, or a combination of the two. Fatigue from thermal transients is a major driving mechanism for crack initiation in the ligament area. These thermal transients can be due to a rapid ramp rate or short-term thermal shocks from the mismatch of incoming steam and base metal temperature. Creep mechanisms can then assist the propagation of fatigue-initiated damages. Cracking in the bore area can progress to the point where the flaws link between boreholes. The routing of the steam-cooled spacer tube, the circumferential tube spacing, and the resulting ligament efficiency were considered design deficiencies.

Main Steam Outlet Tee Weld Cracking

The crossover connections of the south side header discharge line to the outlet tee above the boiler had repeated cracking problems since the mid-1980s. The cracking occurred along the top of the tee at the transition from the thickened tee to run of pipe. A sag in the horizontal run of the connecting line upstream of the tee was observed, and a mid-span hanger was added. The most significant flaw found was 3.75 in. (9.53 cm) deep during the 1989 Unit 1 inspection. Cracking on the outside surface of piping welds may be caused by high bending stresses due to the piping arrangement and the original tee design.

Temperature Monitoring of the Header

Thermocouples were installed on the steam-cooled spacer tube stubs and adjacent superheater tube stubs. Data were collected during hot and cold startups, a normal shutdown, and unit trips. The thermocouples indicated drastic temperature changes during both shutdowns and startups on the unit. The transient routinely occurred over a 10-minute period and typically ranged in magnitude between 100 and 400°F (38 and 204°C). The maximum hourly rate of change observed was 553°F/hr (289°C/hr).

Redesign Considerations

The replacement of a header provides the opportunity for improvements in design and material selections [75]. The most significant limitation for the redesign is the physical constraints of making changes to the configuration. The following potential enhancements were considered:

- The upgrade of the header to P91 material was evaluated [72]. The advantages of the creep properties of P91 material were not considered because creep was not regarded as a primary failure mechanism in the existing header. The approach taken for this project was to eliminate the root cause of the thermal shock stresses by replacing the 200 and 201 valves and optimizing the design of the header to reduce thermal stresses.
- A requirement for minimum ligament efficiency of 0.5 in the circumferential and axial direction was established for the replacement header. The circumferential efficiency was based on the borehole spacing on the header's inside surface.
- The tube stub detail resulted in a near-full penetration weld to eliminate the gap that would fill with oxide over time creating hydrostatic forces pushing the tube stub out. This detail is shown in Figure 6-5.
- To minimize the stress intensification factor at the lip of the borehole, the replacement header had this area chamfered to eliminate the sharp corner.
- The terminal tubes were reconfigured to increase the tube flexibility and reduced the bending stresses at the stub tube welds.
- Steam-cooled spacer tubes were eliminated.
- The redesign of the header recognized the limitations of ASME Section I to consider localized stresses and the impact of operation on the integrity of the pressure part. The BLESS computer code and the German design code were used to assess the impact of operation on the new header design [77].

BLESS Code Analysis

The BLESS computer code was used to quantify the improvement in design life of the header that could be achieved with increasing the circumferential ligament spacing. The program calculates the time from initial operation to crack initiation and eventual failure. The material properties model in the BLESS program incorporates the effect of aging on material properties. For headers already in service, the program permits adjusting the key inputs—including current

crack size, material ultimate tensile strength and hardness, and oxide crack depth—to perform a sensitivity analysis of assumptions and to attempt to match the estimated flaw size or growth with what has actually been observed. Using the BLESS code, a comparison analysis was performed to quantify the improvement in header life achieved by increasing the ligament spacing from 15° to 20° between adjacent boreholes (see Table 6-2). This analysis showed the significant improvement in design life that can be achieved with the increased circumferential spacing.

Table 6-2
BLESS Code Analysis Results

Header Life Event	Ligament Spacing	
	15°	20°
Time to crack initiation (hrs)	37,000	39,000
Time to failure (hrs)	248,000	480,000

Summary

The increase in the service life of high-temperature headers can be achieved by header base material upgrade. More and more utilities are opting for upgrading header material to modified 9Cr-1Mo-V (SA-335 P91). The modified 9Cr-1Mo steel has considerably greater creep properties and rupture strength than conventional 2-1/4Cr-1Mo, offering the capability to dramatically increase header life. At a design temperature of 1000°F (538°C), the ASME code allowable stress is 14.3 ksi (98.5 MPa) for P91 and 8.0 ksi (55 MPa) for P22. The required wall thickness of a P9l header is only about 55% of that requited for a P22 header. At a design temperature of 1050°F (566°C), the required wall thickness of a P91 header is only about 45% of that required for a P22 header. The thinner wall thickness results in reduction of transient thermal stresses. At temperatures of 1000–1100°F (538–593°F), the yield strength of P91 is more than 50% greater than that of P22. The greater yield strength affords an increase in the resistance to fatigue damage. However, far more important than the resistance to fatigue damage is the increased resistance to creep damage in P91 headers.

The design enhancements, which can be implemented to address high-temperature header failure mechanisms, are summarized in Table 6-3. Table 6-3 also lists the potential benefits for these design enhancements.

Table 6-3
Design Enhancements to Improve High-Temperature Header Reliability

Design	Failure Mechanisms Addressed	Benefits
Increase ligament spacing and perform BLESS code evaluation for new high-temperature headers.	Ligament and bore cracking	Eliminate the ligament cracking and inspection.
Increase stub tube flexibility.	Tube stub weld cracking	Eliminate weld cracking.
Instead of a standard socket weld, use a full-penetration tube-to-header to reduce stress concentration, improve heat transfer, and improve joint strength. Do not use wrapper tube for SH/RH tube alignment.	Tube stub weld cracking, ligament cracking, and borehole cracking	Eliminate cracking and failures.
Consider header humping due to top and bottom temperature differential.	Tube stub weld cracking and other attachment cracking	Reduce weld cracking potential, inspection, and repair.
Use forging for pipe nozzle connections.	Elimination of the stress concentrations and prevention of weld cracking	Reduce or eliminate weld cracking, inspection, and repair.
Use low-hydrogen header welding rods.	Weld cracking	Improve welding joint strength.
Use proper heat treatment.	Weld cracking	Eliminate BTF, inspection, and repair.
Install internal thermal sleeves.	Drain line cracking	Eliminate cracking.
Use T91 material. Reduce the thickness requirement and provide superior fatigue and creep strength for the given temperature.	Borehole cracking, reduction of header thickness and increased header strength	Eliminate header failure potential.

7
PIPING SYSTEM

Background

Piping systems include main steam, hot reheat, and cold reheat lines. Piping system design is governed by the requirements of ANSI B31.1. Design criteria include analysis for minimum wall requirements to account for pressure stresses, deadweight loads, thermal expansion, and other specified transient loads. Piping components are mostly fabricated from extruded (seamless) low-alloy steels; however, a few longitudinally seam-welded piping and elbows have been used in some systems. Beginning in the early 1980s, inspections of piping systems became part of routine condition assessment programs. These assessments revealed:

- Components (pipe spools and elbows) containing longitudinal seam welds have developed through-wall leaks and catastrophic failures.
- Numerous instances of fabrication and service-induced damage, including creep, fatigue, creep/fatigue interactions, and improperly designed support systems, have been identified.
- Service-induced cracking has been widely experienced in girth welds and saddle welds contained in main steam piping. This damage has been thermal fatigue induced, resulting in ID cracking at weld counter bores and external creep cracking of welds and associated heat-affected zones.
- Numerous penetration welds have cracked from creep and thermal-fatigue damage, resulting in RT plug failures, pressure tap, thermowell, and valve bypass line leaks.
- Distress has also been detected in base metal components, including piping spools experiencing creep swelling and ID and OD cracking in tee and wye bodies.
- Base metal damage has often been associated with improper material selection or localized high component stresses from improper support.
- Cracking has been documented to occur in piping spools at welded support attachments, and support components have failed as a result of improper material selection or incorrect design.

The majority of the problems are associated with the welds and fabrication flaws. Piping components containing longitudinal seam welds have been a major concern since several catastrophic failures in the 1980s. The girth welds are also subject to similar problems from welding and fabrication flaws. Catastrophic failures have not occurred at girth welds, probably because fewer stresses are applied (for example, the longitudinal stress is one-half of the hoop stress due to internal pressure). The design code does not normally address the weld strength, which implies that the welded joints have equal or higher strength than the base metal, which may not be the case in reality.

A variety of fabrication flaws, such as slag inclusions, lack of fusion, incomplete weld penetration, welding toe cracks, solidification cracks, and aligned particles, as well as service-induced creep and thermal fatigue cracks, have been reported. In spite of extended duration of service, up to 30 years, some of the pipes have shown tolerance to pre-existing flaws without additional creep damage. Some of the major observations that have emerged from field inspections can be summarized as follows:

- Flaws have been found to be present in the weld metal, base metal, and the fusion line. In general, the fusion line flaws have shown a greater tendency to grow by creep in service compared with flaws at other locations.
- There is no clear-cut association between presence of flaws and cavities.
- There appears to be an incubation period associated with the growth of pre-existing flaws. The incubation period may be shorter for fusion line flaws than for the others.
- Cavities, if present, could be found near the outside surface, inside surface, or at the mid-wall. Evidence of distress is not always apparent from surface replication.
- Local weld repairs and aligned inclusions appear to be contributing causes to creep crack growth. This observation, coupled with literature observations that impurity elements, postweld heat treatment, and overall material degradation affect the crack growth, suggests that the integrity of the welds may be influenced by all of these factors.

Piping Damage Mechanisms

The primary damage mechanisms experienced in piping systems are creep, thermal fatigue, creep-fatigue interaction, and microstructural changes (thermal degradation) [67]. Damage resulting from these mechanisms is manifested by distress in various forms, such as cracking, swelling, embrittlement, or softening, depending on location, composition, metallurgical structure, and operating environments. Table 7-1 summarizes the potential damage mechanisms and locations for steam piping system components.

Table 7-1
Damage Mechanisms and Locations for Piping System Components

Component/Location	Damage Mechanisms
Spool pieces	Creep swelling, temper embrittlement, thermal softening
Wye and tee body	External creep cracking, external thermal fatigue cracking, internal thermal fatigue cracking
Girth welds	External creep damage, internal thermal fatigue cracking at counterbores
Seam welds	Creep cracking
Saddle welds	Creep cracking
RT plug and thermowell welds	Creep cracking
Drain line and pressure tap	Bimetallic welds, creep cracking
Penetrations	Internal thermal fatigue cracking, internal thermal shock cracking
Supports	Creep cracking, overload, thermal softening

Longitudinally Seam-Welded Steam Pipes

Following the catastrophic failure of a seam-welded hot reheat (HRH) pipe at two power stations in 1985/86, the U.S. Electric Utility Industry, with the assistance of EPRI, embarked on an aggressive inspection and evaluation effort to minimize the risk associated with operating seam-welded hot reheat piping [81–94]. This resulted in the EPRI guidelines (CS-4774) for inspecting and assessing the integrity of seam-welded piping, issued in 1987. The guidelines have heightened industry awareness and technical understanding of the problem and have prevented some potential failures. Since that time, several more seam-welded pipe failures have occurred. These failures have not been catastrophic, but have contributed to the re-emergence of the seam-welded piping safety issue as a major concern. Additional inspection and laboratory testing data knowledge accumulated since 1987 suggests that the reliability of HRH seam-welded piping integrity predictions can be enhanced, and that these predictability enhancements, coupled with appropriate inspection practice and crack growth analyses, can identify high-risk conditions early enough to avoid catastrophic failures. The additional efforts launched by EPRI since 1987 have contributed to the new guidelines published as EPRI TR-104631 in 1996.

Failure Mechanisms for Longitudinally Seam-Welded Steam Pipes

Figure 7-1 is a schematic that shows the primary cracking/damage locations in high-energy piping seam welds. There are many factors—such as stress, stress state, temperature, time, fabrication defects, heat treatment, inclusion content, cusp geometry, weld-base metal creep strength mismatch, root angle, and pipe ovality—that can contribute to seam-welded pipe

failures. Unique combinations of these factors have evidently contributed to various industry failures. However, there is as yet no quantitative formula that combines these effects to predict weldment performance.

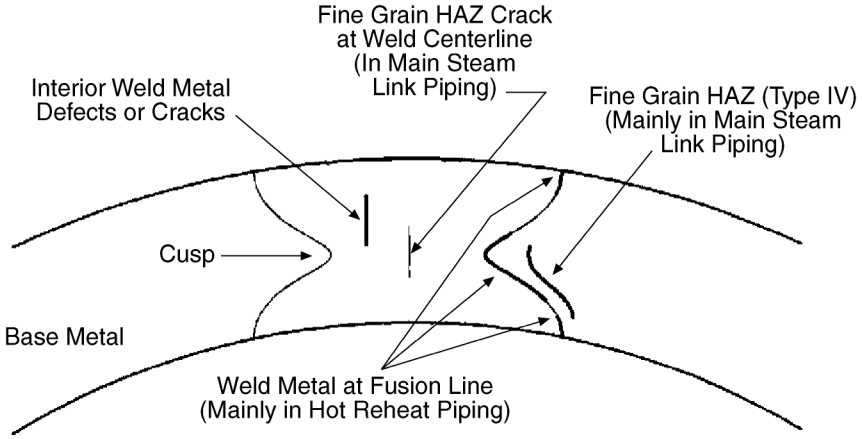

Figure 7-1
Schematic That Shows Primary Cracking/Damage Locations Observed in High-Energy Piping Seam Weldments

The mechanisms and contributing causes of seam-welded piping failures are not fully understood. It has been suggested that failures occur by uniform initiation of creep cavitation damage through the wall, followed by rapid linkup of the cavities leading to catastrophic failure. In this rapid cracking failure scenario, cracks grow rapidly from the undetected microscopic level damage into major through-wall cracks, and there is difficulty for early detection by conventional inspection methods. However, evidence on HRH piping damage data indicates a gradual evolution of detectable damage. In this scenario, creep microcracks initiate locally at the subsurface weld cusp region very near the fusion line. This microcrack-damaged zone then grows toward the pipe inside surface by progressive formation of microcracks confined to the near-fusion line region and to a region immediately ahead of the current microcrack-damaged zone. The progressive growth of the microcrack-damaged zone beginning from the cusp follows the through-wall stress gradient affected by cusp geometry and weld-base metal creep rate mismatch. This zone continues its growth, reaching the pipe inside surface. During this time, linkup of microcracks in the early wake of this growing zone may produce a macrocrack, with the microcrack form of damage continuing to occur at the zone's leading edge. Final failure occurs by linkup of microcracks to form a macrocrack, and growth of the macrocrack toward the pipe outside surface. Figure 7-2 shows a schematic illustrating this scenario. The following important aspects of this damage scenario are directly relevant to the inspection and evaluation procedures of these guidelines:

- Microcrack damage initiates locally at the cusp, followed by growth of this microcrack-damaged zone in a time-dependent manner.
- The microcrack damaged zone (when exceeding 0.05 in. [1.27 mm]) is detectable by the EPRI ultrasonic inspection method.
- The detected crack-damaged zone can be sized by the same inspection method.

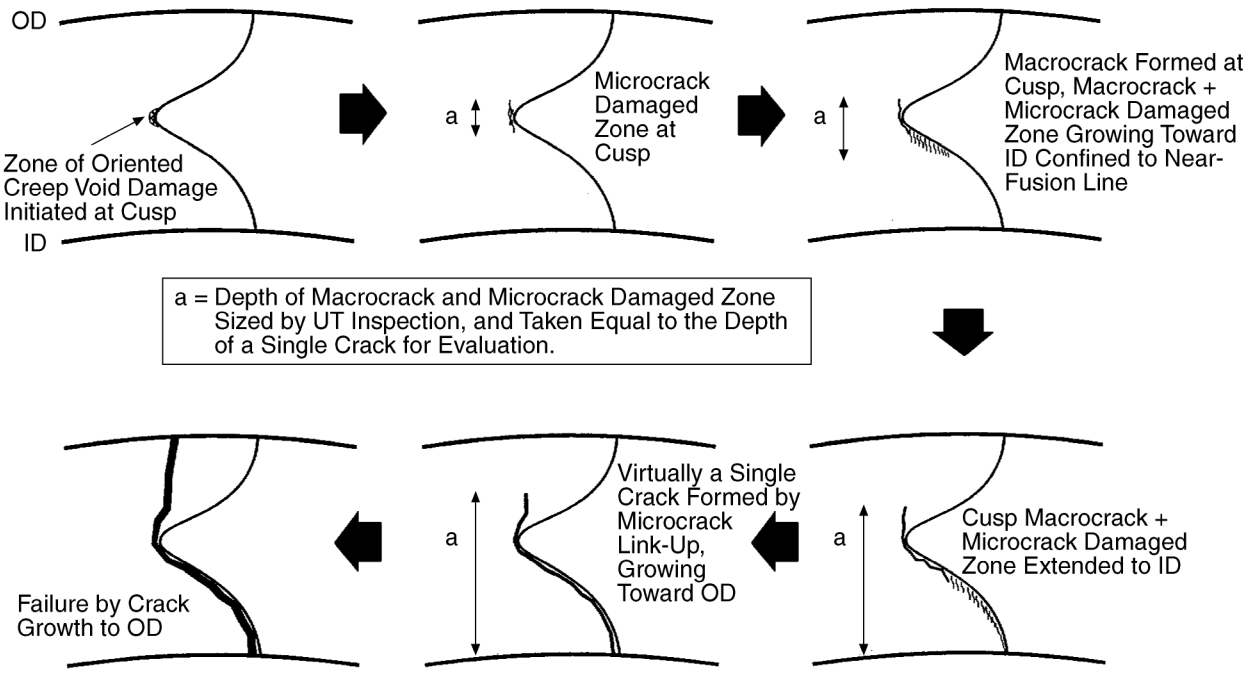

Figure 7-2
Schematic Illustrating the Evaluation of Creep Damage in Case of Double-V Seam-Weld Hot Reheat Piping

The evaluation procedure is empirically based on the only available fracture mechanics model and associated laboratory data that describe growth of a single crack. The detected and sized damaged zone is represented by a single crack of size equal to the damaged zone size, growing at a rate predicted from laboratory data and benchmarked against known field experience.

Other failure scenarios involving more rapid cracking, such as that of uniform creep cavitation damage and rapid cavity linkup, may occur under special circumstances, depending on pipe configuration, weld geometry, and system stresses. The current knowledge, however, does not permit prediction of these circumstances. For example, more detailed analyses for configurations susceptible to rapid cracking as some suggested, such as stress gradients in bends, clamshell elbows, roof-angled or peaked pipe, and oval cross-section pipe, are needed for identification of the rapid cracking scenario susceptibility in these cases. Further, the documented field cracking experience examined does not provide evidence of the rapid cracking scenario to help identify and quantify the conditions that would make it possible.

EPRI Guidelines for the Evaluation of Seam-Welded High-Energy Piping

The pipe evaluation procedures recommended by EPRI have been developed in an empirical manner, by benchmarking laboratory test-based damage rate predictions against service experience, and with particular reference to failure modes commonly encountered in seam-welded hot reheat piping. Cumulative field and laboratory results give confidence that the inspection and assessment procedures put forward by EPRI in 1987 are likely to identify high-risk conditions early enough to permit repair/replacement and to avoid seam-welded pipe failure.

The integrity prediction approach offered is nevertheless empirical, necessitated by a current lack of a quantitative understanding of the variables controlling seam weldment damage and failure. Recognizing the uncertainties associated with applying an empirical approach to the range of conditions possible, the guidelines have been developed to incorporate the following elements of conservatism:

- The use of crack growth rate predictions that are benchmarked against field experiences of cracking and failure in pipes representing a small fraction of the operating seam-welded piping-hours.
- The use of four times the normally calculated crack driving parameter in the crack growth analysis (roughly a factor of three increases over the median growth rate from laboratory tests).
- Requirement of 100% inspection the first time, triggered by a 10% life fraction expended (LFE) criterion representing a small fraction of the rupture life design basis.
- Restricting the crack growth-based evaluation procedure to the HRH pipe seam weldment fusion line and weld metal cracking phenomenon. The lesser-understood Type IV fine-grain HAZ (and weld centerline fine-grain) cracking problems primarily identified with main steam pipe seam weldments are treated even more conservatively as being flaw-intolerant conditions requiring repair or replacement.
- Evaluations based on UT examinations alone use a conservatively sized and located (fusion line for HRH piping) flaw.

As understanding of the relevant seam-welded pipe damage mechanisms progresses, it is hoped that the empirical methodology proposed by EPRI will form the basis for a more rigorous engineering analysis and reduction of the conservatisms.

Of the 17 known cases of failure (leaks and ruptures) and major cracking in seam-welded piping to date, 12 involve HRH lines and 5 involve pipes and fittings carrying main steam at much higher pressures. Every one of the HRH pipe cases has shown weld fusion line cracking. The main steam pipe cracking, however, has involved other cracking modes such as weld centerline cracking and Type IV HAZ cracking. It remains unresolved as to whether the difference in failure location is due primarily to:

- Wall thickness differences (main steam pipes are significantly thicker than HRH pipes).
- Differences in weld geometry (single-U typical of main steam and double-V typical of HRH piping seam welds).
- Differences in heat treatment (all cracked and failed main steam pipes were subcritically heat-treated, while most of the cracked or failed HRH pipes were normalized and tempered or critically annealed, which effectively removes the HAZ and alters the fusion zone microstructure).

The current guidelines primarily address the thin-wall class of seam-welded pipe typical of HRH piping.

Based on the observation that the cracking and failure cases to date have occurred at estimated creep rupture life fractions as low as 10% of that predicted by the conventional ASTM (or ASME) minimum properties curve, it is recommended that this "life fraction" number be used to assist in an inspection decision. The life fraction calculations and results of conventional stress rupture tests have been used only as an empirical measure of weldment performance because pipe constraint, stress concentration, stress redistribution effects, and the failure mechanisms occurring in piping under operating conditions are not reproduced in accelerated laboratory tests on uniaxially loaded, standard-size specimens.

Regarding inspection, the high-sensitivity ultrasonic examination procedure recommended for the first time in 1987 (CS-4774) continues to be useful for reliably inspecting pipe seam weldments. For girth welds, the procedure in Section V of the ASME code is deemed adequate. Table 7-2 compares EPRI and ASME Section V ultrasonic examination requirements for ferritic pipe welds.

Table 7-2
Comparison of EPRI and ASME Section V Ultrasonic Examination Requirements for Ferritic Pipe Welds

Inspection Parameter	EPRI	ASME Section V	Advantage of EPRI Procedure
Calibration reflectors	1/32 in. (0.7937 mm) notches 1/16 in. (1.587 mm) side-drilled holes	10% notches 3/32–1/8 in. side-drilled holes	Provides a consistent means of ensuring maximum sensitivity for all flaw types.
Beam angles	0, 45, and 60 or 70 for vertically oriented flaws	45 (other angles optional)	Provides maximum assurance that all flaw types can be detected and characterized.
Scanning sensitivity	Reference + 14dB	Reference + 6 DB	Better ensures the detraction of low-amplitude flaw-like indications.
Recording criteria	Record and evaluate all indications that exceed 20% of reference level (embedded reflectors) 50% of reference level (all other reflectors)	Any imperfection causing an indication in excess of 20% distance amplitude correction (DAC) shall be investigated.	Ensures that low-amplitude reflectors are recorded and evaluated.
Flaw sizing (length)	Reduced to noise Level at end points	50% end points	Provides maximum assurance of flaw length estimates; this is important due to the inconsistent reflectivity properties of some flaw types.
Flaw sizing (depth)	High-angle L-wave flaw-tip diffraction	Amplitude drop	Provides maximum assurance that flaw extremities are evaluated rather than a simple measurement of the ultrasonic beam width.

More recently, EPRI has completed a survey of seam-welded piping inspections. The survey covered 162 units with 47,000 ft (14.33 km) of seam-welded high-energy piping. The inspection results were based on inspection of 30,000 ft (9.14 km) of in-service seam weld. The reported flaws include:

- 37 flaws >0.2 in. (5.1 mm) deep
- 23 flaws between 0.1 and 0.2 in. (2.5 and 5.1 mm) deep with continuous or intermittent length (parallel to seam) >2 ft (0.6 m)
- Hundreds of short flaws between 0.1 and 0.2 in. (2.5 and 5.1 mm) deep

Results of the most recent EPRI survey suggest a significant fraction of reported flaws are nonpropagating, consistent with the results of the previous survey and study.

Many leaks and cracking conditions have occurred in the seam welds of hot reheat "clamshell" elbows (two-piece seam-welded elbows). The leaks occurred in the intrados weld, but did not result in catastrophic rupture. Clamshell elbows (and tees) are considered especially prone to creep cracking, even in the absence of significant defects. The membrane hoop stress due to pressure at the intrados of a clamshell elbow is higher than in a straight section with the same wall thickness. This intensification roughly varies from 5% to 10% for a 5D to 3D radiused elbow (D-pipe nominal diameter), as can be estimated from handbook solutions for thin-walled pipe under internal pressure.

Metallurgical Observations

Some of the damage observations include:

- Damage (cracking) consistently occurred at the fusion line in all cases involving HRH pipes. However, fusion line damage is not the only damage mechanisms. Other damages involve a major cracking in the HAZ of a repair weld (crack located in original weld metal) and Type IV cracking (or fine-grain HAZ cracking). The fusion line cracking in HRH pipe seam welds is a key observation in contrast with the main steam pipe seam welds, where major cracking was observed to occur at the fine grained weld centerline that is heat-affected in a multi-pass weld or at the HAZ Type IV cracking. Figure 7-2 is a schematic that shows the primary locations of cracking viewed in cross-section. Another observation is that the presence of nonfusion line cracking in all of the main steam (thick-wall) link piping and in the HRH piping at one plant may be related to a combination of the U-groove weld geometry and subcritical PWHT common to all these cases.
- Crack initiation has been attributed to pre-existing flaws in only a few cases. The vast majority was reported to have occurred at a subsurface (within-wall) location. In all cases, crack propagation has been reported to occur by creep.
- In most of the HRH cases, the initiation zone coincided with the cusp formed by the double-V joint design (see Figure 7-1). This causes difficulty with assessing longitudinal seam weldment condition through OD surface replication (metallography). Another inference made from the data is that a volumetric inspection using ultrasonic examination can identify this form of subsurface damage in advance of failure.

- The cracked/failed HRH pipe weldments exhibited evidence of varying degrees of creep damage. Generally, the weld metal showed creep cavitation with the greatest cavitation noted in the weld metal at or very near the fusion line. In the Type IV (fine-grain HAZ) failures in the main steam pipe seam welds, the failed zone showed strong evidence of creep cavitation.
- Thus far, Type IV cracking has not been observed in HRH pipe seam weldments in the United States. However, recent observation of Type IV creep damage (in addition to fusion line cracking) in an HRH pipe seam weldment of an overseas power plant indicates that a combination of a U-groove weld geometry and a subcritical PWHT may be the common denominator in all of the seam weldment failures involving nonfusion line cracking. The experience on Type IV cracking in seam weldments is significantly less extensive and less quantitative than is that on fusion line cracking.

Effect of Metallurgical Variables

Pre-Existing Defects

Pre-existing defects refer to flaws occurring as a result of plate and weldment fabrication. Examples of these include slag inclusions, lack-of-fusion, porosity, incomplete weld metal penetration, and weld solidification cracks. A toe crack, initiating at the weld-base metal "toe" at the surface, generally driven by a stress intensification due to a geometric discontinuity, can also be considered a pre-existing defect.

From the results of the 1986 survey [84] and the more recent survey by Marschall et al. [85], it has become apparent that a large percentage of these flaws are nonpropagating. For example, the two surveys indicated that of a total of 32 flaws, 23 flaws (these flaws were fabrication-related) were considered nonpropagating, as evidenced by the absence of creep cavitation or microcracking associated with the flaws. These flaws were located in the weld metal. In contrast, with very few exceptions, all of the propagating flaws were located near the weld fusion line. The non-propagating flaws were in the depth size range from 10 to 20% (0.1 to 0.2 in. [2.54 to 5.08 mm]) of the wall thickness, with one very large flaw of 0.375 in. (9.53 mm) in depth (30% of wall). Even the largest of these flaws, which was a weld repair-related crack, had not resulted in further propagation. Results of a 1993 EPRI survey of utility inspection experience, described in a following subsection, has shown the presence of hundreds of flaws, some exceeding 0.2 in. (5.08 mm) in depth and also nonpropagating. While the specific locations of these flaws are unknown, the nonpropagating nature of the flaws is consistent with the earlier survey-based observations.

Pre-existing defects, although potential contributors to damage and failure, are not a necessary condition for cracking and failure.

Weld Inclusions and Composition

The one factor common to all of the damaged/failed HRH pipes examined is that they were fabricated by the submerged arc (SA) welding process, a process in which the interaction

between the flux and the molten weld pool can result in relatively high concentrations of nonmetallic inclusions in the weld deposit. Further, laboratory studies have shown that the type of flux used has an appreciable effect on the type and concentration of inclusions and on the stress rupture behavior [86]. A systematic laboratory investigation of the effect of flux acidity on inclusion and rupture behavior of submerged arc welds by Henry et al. [86]. has shown that generally inferior rupture properties (time-to-rupture and rupture ductility) are attributable to the increased inclusion content resulting from increased flux acidity. Some deep voids were observed to contain inclusion particles, and the role of grain boundary inclusion particles in accelerating creep void formation and damage can be significant. In addition, inclusions have been shown to lead to severe reduction in the impact toughness as manifested by a lower Charpy upper-shelf impact energy.

The majority of in-service HRH seam-welded piping in the United States has been fabricated using acid or neutral flux compositions. In some cases, acid flux has been used for the inside surface and basic or neutral fluxes for the outside surface fill and cup passes. The acidity may be measured via a Basicity Index [87], which roughly translates to a weld metal bulk oxygen content of >700 ppm for an "acid" flux, 500–700 ppm for a "neutral" flux, and <500 ppm for a "basic" flux. Henry et al. [86]. have concluded that inferior (to base metal) elevated temperature rupture behavior can be expected in case of "neutral-to-acid" flux-fabricated weldments. Furthermore, the gradient in inclusion content arising from the solidification characteristics of a typical weld pool expectedly results in an increased inclusion content at the fusion line with associated inferior creep properties at this location [6]. In effect, high oxygen content weld metal longitudinal pipe seams may be considered to be at a greater risk of failure in elevated temperature service. However, the usefulness of weld metal oxygen (O_2) content alone as a screening parameter for risk is uncertain, because failures have been experienced in cases of O_2 content at the low end of the in-service spectrum (for example, 600–900 ppm), and numerous weldments with relatively high O_2 content (>700 ppm) have performed well. The bulk O_2 content also need not reflect the local inclusion density at, for example, the fusion line. Analyses of one plant indicated a neutral flux weld based on bulk O_2 content, but showed a high inclusion density at the fusion line. Conversely, the fusion line region-to-interior weld metal gradients in inclusion content have, in some failure instances, been insignificant, with the total inclusion content being low, suggesting that other variables may be of equal, if not greater, importance.

Heat Treatment

The effect of weldment heat treatment has received scrutiny in light of the fad that all three ruptured HRH pipes and some clamshell elbows that cracked had been given a high-temperature annealing or normalized and tempered (N&T) treatment. However, cracking has also been subsequently observed in other HRH pipes that had been given a lower-temperature postweld stress relief or subcritical heat treatment below the lower-critical temperature. In the case of the thick-walled main steam link and lead pipes that have leaked/cracked, the weldments had all received a subcritical heat treatment.

Failure of seam-welded piping has occurred regardless of the type of heat treatment. The stress rupture behavior of weldments has not shown a consistent trend with respect to the effect of heat treatment. No conclusive evidence has been gathered with respect to the effect of heat treatment

on seam-welded pipe performance. However, the subcritical PWHT in combination with the U-groove weld geometry is a common denominator in all cases of nonfusion line cracking.

Material Chemical Composition

In addition to the O_2 content, a variety of impurity elements (Cu, S, P, Sb, Sn), capable of embrittling the low alloy steel, have been observed on freshly fractured near-fusion line material. In addition, reduced carbon can reduce creep resistance and rupture life. However, the comparable HRH chemistries of failed (or cracked), and uncracked in-service longitudinal seam welds suggest that such composition effects are yet inconclusive. Furthermore, gradients in chemistry from solidification or from variation in flux with weld pass are virtually impossible to measure or predict. The conflicting observation of elevated C, and lowered Si and O_2 content in the near-fusion line, failed zone of one plant is an example supporting the current lack of finality on composition effects. Indeed, there exist many miles of piping, seam-welded by the SA process using an acid flux and with the weld metal containing significant impurity levels, that have performed satisfactorily. Inclusion and composition effects must therefore be considered in conjunction with the other factors of significance such as the operating conditions of temperature and stress.

Weld Geometry

It is generally accepted that the cusp region of the fusion line of a double-V seam weld is a location where the hoop stress intensifies and the stress state becomes increasingly triaxial (constrained) as the mismatch in the creep rate between the base metal and the weld metal increases. Figure 7-3, reproduced from Stevick and Finnie [88], shows the finite element analysis-based estimate of the magnitude of the intensification at a 30° weld cusp for a given level of mismatch (R = weld metal creep rate/base metal creep rate = 5). While the effects of increasing constraint on reducing ductility are not well enough known to permit adequate quantification of the life reduction due to this cusp effect, it is clear that the stress intensification can result in a localized initiation of cracking, and a quantifiable reduction in rupture life estimable from, for example, the ASTM Stress-Larson-Miller Parameter rupture curves for the material. The following example illustrates the potential rupture life reduction effect. For a stress intensification of 1.4 (see Figure 7-3), a mean diameter hoop stress of 44 Mpa (6.4 ksi) for 1-1/4 Cr-1Mo pipe in intensified to 61.6 Mpa (8.9ksi) at the seam weld cusp. This level of stress intensification, if applied, suggests a 70% stress reduction penalty requirement on seam-welded pipe design and predicts a rupture life equal to approximately 15% of that for the case without stress intensification. The example is only intended to illustrate the potential effect of a cusp stress intensification on rupture life. In reality, the weld/base metal creep rate ratio, R, can vary from weldment to weldment and change with service time for a given weldment, so that quantitative prediction of the cusp effect is generally difficult.

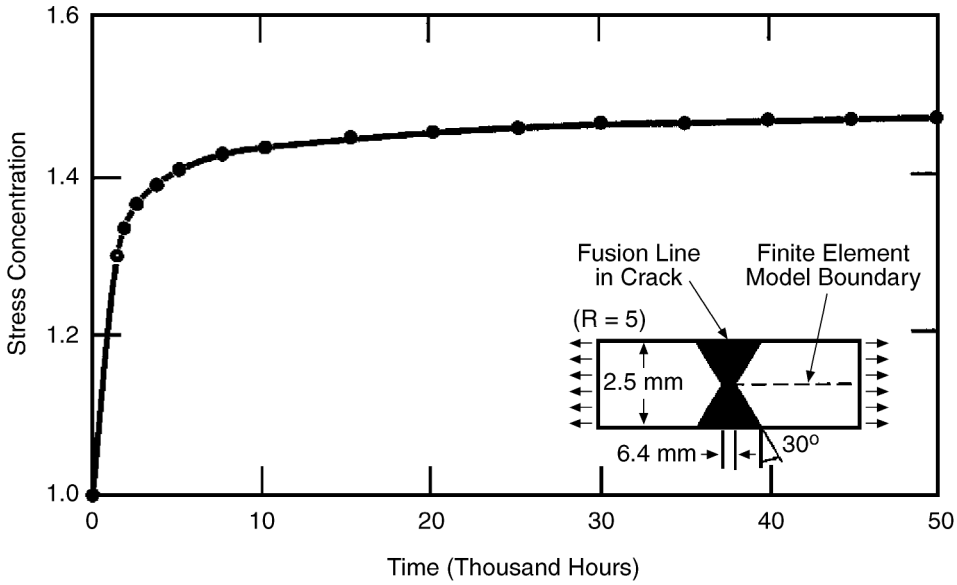

Figure 7-3
Finite Element Analysis-Based Prediction of the Stress Intensification at the Cusp Due to Weld/Base Metal Creep Rate Mismatch R [88]

The weld-base metal creep rate mismatch can result in an accelerated creep crack growth rate at the fusion line, analytically predicted to be accelerated by a factor of 2 to 3 for a mismatch of R = 5. The rupture life-based prediction of weldment integrity, on the other hand, is used primarily as a screening criterion for preliminary assessment of pipes at risk, with the cracking and failure experience benchmarked against simple rupture life-based predictions of failure.

Effect of Pipe Configuration and System Loads

Unlike girth welds, seam welds in straight pipe spool pieces do not experience a large variation in stress due to pipe configuration and system load changes.

Buchheim et al. [89] have shown, by finite element stress analyses, that a weld roof or peak can result in an increase of the hoop stress due to pressure at the weld over that for a perfectly circular cross-section. Their results—for Grade 11, 36 in. (91.4 cm) diameter, 0.5 in. (1.3 cm) thick, high-temperature refinery pipe with an approximately 22° deviation from a perfectly circular section—suggest this intensification at the near-ID to be >400% initially (no creep), reducing to 40% following relaxation due to creep. The intensification averaged over about one-half the wall thickness to the ID appears to be roughly 200% initially to 40% following relaxation.

Typical HRH pipe thickness-to-radius ratios are much higher than noted in EPRI report CS-4774 [81], resulting in a significantly lower predicted intensification effect. The overall cracking and failure experience with seam-welded high-energy piping in power plants, in general, does not show a correlation between roof-angle and damage/failure for the roof-angle effect that can be quantitatively applied to operating steam lines. Similarly, pipe ovality may also contribute to locally increased hoop stress. Again, the lack of data on time-dependent effects and the overall

failure/cracking experience do not permit quantitative treatment of the pipe ovality effect in these guidelines. Note that seam-welded pipe bends may be more likely to have a peaking or oval cross-section from the ovalizing tendency during the bending operation.

A second issue related to seam-welded pipe bends (where the seam is typically located at the "neutral" zone of the bend) is that bending moments in the plane of the bend can cause additional hoop stress on the weldment system loads resulting in a bending moment to open up the pipe bend cause an ovalizing tendency that increases the hoop stress at the "neutral" bend zone location, with tension at the ID to midwall and compression at the near-OD locations. A reversal in bending moment reverses the stress distribution across the wall. For approximately the ASME B31.1 Power Piping Code-permissible maximum expansion stress range, the elastic membrane hoop stress (due to in-plane bending alone) is roughly 10% of the hoop stress due to pressure for a 5D bend and 4% of the hoop stress due to pressure for a 3D bend (calculated from, for example, a 0.1 wall thickness-to-pipe radius ratio). The issue has been briefly described within the context of the limited elastic-plastic stress analyses results that have been published. As with the pipe cross-section effect, the system load effect on bends cannot be isolated and quantified from the overall cracking and failure experience.

Seam-welded pipe bends, clamshell elbows, and other fittings may be subject to hoop stresses greater than experienced by straight sections. The final evaluating of seam-welded piping is essentially crack growth prediction-based, using inspection results. The effects of pipe configuration and system loads on creep crack growth are currently not known. For this reason, and due to the general inability to adequately incorporate the effect of the range of variables on crack growth, the evaluation procedures have been developed in an empirical manner by benchmarking the crack growth-based predictions against the field experience.

EPRI Guidelines Summary

The key elements of these guidelines are summarized:

- The guidelines-recommended seam-welded piping evaluation is essentially a "flaw tolerance" approach designed on the basis of pipe inspectability and the prediction of crack growth. The need for pipe inspection is defined on the basis of a generically computed LFE screening criterion derived from field failure experience.
- The ultrasonic examination procedure recommended in 1987 by EPRI, and described here, has been found, in laboratory experiments, to be capable of detecting midwall microcrack damage zones of depth as low as 0.03 in. (0.76 mm). Based on the laboratory results, and on the typical ultrasound wavelength for the application (0.055 in. [1.4 mm]), which represents a reliably detectable defect size, 0.05 in. (1.3 mm) is concluded to be a reliable detection threshold for flaw size. This is the default size of flaw recommended for remaining life predictions when the ultrasonic examination does not show evidence of significant indications.
- The available laboratory creep crack growth data on ex-service seam weldments have been analyzed, and a procedure for empirically using the median growth rate behavior has been offered for evaluation of seam-welded piping. The procedure was developed by

benchmarking the predictions against field experience (oxide-dated cracks and service duration), resulting in an empirical multiplier (intensification) on the analytically estimated crack growth parameters. The procedure gave reasonable predictions across the board for nearly all of the field cracking and failure cases studied. In addition, the recommended multiplier is consistent with analytical predictions of the intensification for expected weld-base metal creep rate mismatch.

- This observation, coupled with the review of the relatively narrow crack growth behavior scatterband, and concern with the reliability of limited weldment-specific data to accurately predict remaining life, indicates that weldment-specific crack growth testing may provide only marginal improvement in predictability.
- The crack growth calculation procedure recommends use of the EFRI BLESS code, or other equivalent crack growth calculation software, with plant-specific operating cycles considered. Specific materials creep rate and crack growth properties to be used are provided. Where material sample removal and examination is indicated and conducted, guidance is provided on the materials properties to be used as a function of local inclusion content, location of crack (interior weld metal versus fusion line), presence of creep cavitation damage, and so on.
- The generally poor predictability of crack growth in fine-grain HAZ material (Type IV or at the weld centerline), and the field experience with this form of damage in main steam pipe seam weldments, requires that sample removal be conducted when a UT indication is noted in case of main steam pipe seam weldments.
- Where samples are removed and metallographically examined for creep damage, the Guidelines offer cavity classification- and cavity density-based remaining life estimation procedures for weld metal and Type IV zones, respectively. In general, the observation of macrocracking along with widespread cavitation is a condition that requires immediate spool piece replacement.
- Besides its use as a weldment-specific screening criterion “triggering” inspection and periodic monitoring, conventional pipe weldment-specific stress rupture testing is concluded to have limited quantitative value, and is not generally recommended. The conclusion regarding the limited value of conventional rupture testing was arrived at following thorough review of the available ex-service weldment data. In these cases, the stress rupture test-based LFE could not be correlated with creep rate or crack growth behavior. This aspect of the approach will be modified should alternative rupture test methods, such as full-section-size cross-weld tests, be shown to provide quantitatively useful indications of remaining lifetime.
- The evaluation procedures are to be conducted on a spool-piece-by-spool-piece basis. Therefore, a required 100% reinspection pertains only to a given spool piece. Seldom will all spool pieces of the entire piping system require 100% reinspection at any given time. The spool piece-specific evaluation provides the technical basis for the utility to economically plan reinspections with regard to interval and extent.

Although major strides have been made in understanding and quantifying crack initiation and propagation, a number of deficiencies remain in the current technology for assessment of seam-welded steam pipes, as outlined in the following:

- There is a dearth of information relating to the effects of weldment chemistry, heat treatment, and welding procedure on the propensity for pre-existing flaws, crack initiation, and crack growth. Hence, screening of potentially suspect piping based on these manufacturing considerations is not possible.
- There is very little stress rupture data in the design database pertaining to welds, HAZ, and fusion line. Hence, use of life fraction evaluations is clouded in uncertainty.
- There is very little data relating to crack growth along the fusion line interface. The problem is further compounded by the fact that crack growth rate is also a function of the metallurgical degradation of the pipe and the presence of aligned inclusions. There is currently no nondestructive way of assessing what crack growth behavior should be applicable to a specific pipe.
- A greater metallurgical understanding of the incubation behavior described earlier and the reasons why some cracks grow and others remain dormant is needed. The effects of slag inclusions and impurity segregation on cavitation and crack growth are also pertinent issues.
- The value of replication is limited in view of the observation that failure often emanates from pre-existing mid-wall flaws. Furthermore, inside surfaces, in most cases, cannot be replicated. There is no known NDE technique capable of resolving volumetric creep cavitation damage.
- Stress concentration effects at the fusion line interface in midwall regions due to variable creep properties of the composite regions comprising the weld fusion line HAZ and base metal are not well defined.
- Effect of plant cycling of plant integrity cannot be adequately taken into account due to lack of data. Thus, creep-fatigue may be important.

In light of the many deficiencies, further research is underway to remedy them. The guidelines do not address the following important issues due to the current limitations in the understanding of seam weldment behavior:

- Determination of the risk of leak before break is currently limited by the poor predictability of the relative crack growth rates in the through-wall and pipe axis directions and by the inability to predict linkup of neighboring cracks along the weld seam.
- The guideline's procedures apply to a damage process that occurs heterogeneously by the initiation of a crack or damage zone (zone of discontinuous creep microcracks), followed by time-dependent growth of the crack or damage zone across the remainder of the section. This form of damage accumulation is representative of the experience, and the guideline's procedures are predicated on this experience. The guideline's procedures do not apply to a "homogeneous damage" scenario wherein creep cavitation occurs simultaneously through a large portion of the pipe wall followed by rapid cavity linkup producing failure. This form of damage may occur under circumstances where the hoop stress across a significant portion of

the pipe wall is uniform due to, for example, certain pipe geometry characteristics (for example, ovality, roof angle). To date, however, there has been no documented field evidence of this "homogeneous" damage failure scenario in U.S. utility HRH piping. Hence, this form of damage is not treated in these guidelines.

- The current guidelines do not specifically address the potentially detrimental effect of pipe ovality and a roof angle at the seam weld, and no requirements have been identified for inspecting for these geometries. The effect of roof angle and ovality on weldment stresses under creep conditions and on the rate of creep crack growth remains to be quantified.
- The effect of piping configuration and weld geometry on the local stresses acting on a seam weldment under creep (stress redistributing) conditions can provide for better prioritization of locations to be examined/sampled and can help quantify the potentially damaging effects of cycling. Pipe bends, elbows, and fittings are of particular interest.

Despite the limitations and exceptions described here, the guidelines are expected to provide conservative predictions of remaining life.

Discussions

Seam welds represent a weak link in seam-welded piping system. For new designs, seam-welded piping usage should be avoided unless strong economical incentives can be justified. The investigation of seam-welded pipe failures has generated a vast amount of knowledge in the understanding of the behaviors of welds and welding-related regions. Essentially, the weld cannot be perfect, and certain flaws or tolerances are accepted by industry standards. Better NDE techniques, which can detect smaller flaws than the traditional techniques, are available. The use of these advanced techniques should be considered for the critical areas, which are deemed vulnerable.

In many cases, the remaining life assessment effort uses crack-growth fracture mechanics results to draw final conclusions and to avoid the use of the safety factor concept. The current design approach is based on the solid mechanics theory with the usage of safety factors. The material specification and fabrication practice in the industry have permitted certain "flaw" sizes to be acceptable. The use of fracture mechanics in assessing the new design should be considered by using the acceptable "flaw" as default values. This approach has been used in aircraft design. The consequence of the boiler pressure components is high, especially headers. The fracture mechanics approach, as a minimum, can provide qualitative information for adjusting the initial design to increase the baseline reliability with minimum cost.

8
SUMMARY

Boiler design technology has evolved rapidly in the last two decades. A large amount of resources and efforts has also been engaged in resolving the boiler pressure component failure problems in the last decade. It is important that the lessons learned about unit operating, maintenance, cycle chemistry, and boiler tube failures not be forgotten when designing new units. Boiler pressure component reliability preservation starts with design. A quality design is inherent reliability. If the original design possesses errors or inadequacy or the fabrication/ installation contains defects, the plant operation and maintenance will be seriously endangered. The design has its base assumptions, limitations, and constraints. An in-depth understanding of these constraints is required by the operating and maintenance personnel in order to preserve the reliability provided in the original design. Reliability assurance is system engineering, which should consider the complete line of process relationships (for example, system selection, design, material, fabrication, installation, commissioning, operation, and maintenance). To achieve a high level of reliability, boiler pressure components must possess minimum baseline defects.

Today's utility companies must try to maximize the following multiple system objectives:

- Maintain capacity
- Improve efficiency
- Reduce emissions
- Preserve reliability and availability
- Ensure safety
- Minimize production cost

Some of these objectives conflict with each other. The ultimate goal is cost reduction and revenue increase within reliability, safety, and emission constraints. It is essential to understand the constraints and to develop an integrated strategy to optimize the system performance or to conduct economical tradeoffs within these multiple constraints.

This report summarizes the lessons learned during the last decade in boiler reliability/availability improvement activities and provides valuable information that should be considered in component modifications and new boiler design. Initial investment can influence decisions regarding design. However, the life cycle cost should be the focus of the economic consideration.

Many techniques have been developed in the last decade for remaining life assessment for boiler pressure components. The potential for using these remaining life assessment techniques to assess and improve the initial design is described. Appendix A describes the use of

Summary

EPRI-developed TUBELIFE/TULIP, BLESS, and PODIS computer codes to address problems of overheating, header design, and dissimilar metal welds, respectively. The quality of fabrication is an important part of the reliability assurance process. The development of technical specifications for material and fabrication procurement is described in Appendix B.

9
REFERENCES

1. *Generic Guidelines for the Life Extension of Fossil Fuel Power Plants*, EPRI, Palo Alto, CA: 1986. CS-4778.

2. Viswanathan, R., *Damage Mechanisms and Life Assessment of High Temperature Components,* ASM International, 1989.

3. Ruth, L., "Combustion 2000 Low-Emission Boiler Systems," LEBS Workshop, Atlanta, Georgia, February 1995.

4. Stultz, S. S., and Kitto, J. B., eds., *Steam: Its Generation and Use*, 40th ed, Babcock & Wilcox, 1992.

5. Singer, J. G., ed., *Combustion Fossil Power,* 4th ed, Combustion Engineering, Inc., 1991.

6. "Generating Availability Trends Summary Report: Studies 1 to 5," North American Electric Reliability Council, May 1989.

7. "Causes of Electric Generating Outages Following Planned Outages," North American Electric Reliability Council, June 1992.

8. Thomas, G. C., Clayton, W. H., and Llinares, V., "*C-E Availability Data Program*," American Power Conference, Chicago, IL, April 1980.

9. *Boiler Tube Failures, Theory and Practice*, EPRI, Palo Alto, CA: 1996. TR-105261.

10. French, D. N., *Metallurgical Failures in Fossil Fired Boilers*, 2nd ed., John Wiley, New York, 1993.

11. Port, R. D., and Herro, H. M., *The Nalco Guide to Boiler Failure Analysis*, McGraw-Hill, 1991.

12. Barcikowski, C. F., "Pulverized Coal Firing in the 1990s," Power-Gen Conference, Tampa, FL, 1991.

13. Burbach, H. E., and Shulof, G. F., "The Cycle Option," American Power Conference, Chicago, IL, 1980.

14. Wheater, R. I., and Howard, M. H., "Furnace Heat Absorption in Pulverized-Coal-Fired Steam Generating Using Turbulent Burners at Paddy's Run Station," Annual ASME Meeting, New York, NY, December 1949.

15. Harris, D. A., "Effect of Various Fuels on Furnace Design," REA Generating Conference, Owensboro, KY, 1972.

16. *Development of Fireside Performance Indices*, EPRI, Palo Alto, CA: 1998. TR-111755.

17. *Slagging and Fouling in Pulverized-Coal-Fired Utility Boilers,* Vol. 1–2, EPRI, Palo Alto, CA: 1987. CS-5523.

18. Wiener, M., "Latest Developments in Natural Circulation Boiler Design," American Power Conference, Chicago, IL, 1977.

19. Ackerman, J. W., "Pseudoboiling Heat Transfer to Supercritical Pressure Water in Smooth and Ribbed Tubes," *Transaction of the ASME,* August 1970.

20. Lyons, D. E., and Blackburn, S. S., "Design for Availability - An Update," American Power Conference, Chicago, IL, 1997.

21. Tuppeny, W. H., "Designing for Western Coals," CE, TIS-4977.

22. Hell, T. C., and Durrant, O. W., "Designing Boilers for Western Coal," Joint Power Generating Conference, Dallas, TX, September 1978.

23. *Interim Consensus Guidelines on Fossil Plant Cycle Chemistry*, EPRI, Palo Alto, CA: 1986. CS4629.

24. Aschoff, A., F., Sopocy, D. M., Jonas, O., and Dooley, B., "Interim Consensus Guidelines for Fossil Plant Cycle Chemistry," *Proceedings of the 46th International Water Conference,* Pittsburgh, PA, 1985.

25. *Cycle Chemistry Guidelines for Fossil Plants: Phosphate Treatment for Drum Units*, EPRI, Palo Alto, CA: 1994. TR-103655.

26. Tremaine, P. R., Gray, L. G. S., Wiwchar, B., and Stodola, J., *Sodium Phosphate Chemistry Under High Pressure Utility Drum-Boiler Conditions,* Vol. 1–3, Project 913 G730, Canadian Electric Association, October 1992.

27. *Sodium Hydroxide for Conditioning the Boiler Water of Drum-Type Boilers*, EPRI, Palo Alto, CA: 1995. TR-104007.

28. *Cycle Chemistry Guidelines for Fossil Plants: All-Volatile Treatment*, EPRI, Palo Alto, CA: 1996. TR-105041.

29. *Guidelines for Oxygenated Treatment for Fossil Plants,* Vol. 1, EPRI, Palo Alto, CA: 1994. TR-102285.

30. Davis, C. M., Haller, K. H., and Wiener, "Large Utility Boilers - Experience and Design Trends," American Power Conference, Chicago, IL, 1976.

31. Durrant, O. D., "Design, Operation, Control, and Modeling of Pulverized Coal Fired Boilers," Boiler Turbine Modeling and Control Seminar, University of New South Wales, Sydney, Australia, February 1977.

32. Kitto, J. B., "Technology Development for Advanced Pulverized Coal-Fired Boilers," Power-Gen Conference, Orlando, FL, 1996.

33. Rudd, A. H., and Durrant, O. W., "Designs and Systems for Large Fossil Fuel Units Intended for Cycling Services," American Power Conference, Chicago, IL, 1977.

34. Sommer, T. M., "Field Experience - Reburn NO_x Control," EPRI-DOE-EPA Combined Utility Air Pollutant Control Symposium, Washington, D. C., 1997.

35. *Cycling Operation of Fossil Plants Evaluation and Strategy, Vol. 6*, EPRI, Palo Alto, CA: 1991. GS-7219.

36. *Cycling, Startup, Shutdown, and Layup Fossil Plant Cycle Chemistry Guidelines for Operators and Chemists*. EPRI, Palo Alto, CA: 1998. TR-107754.

37. Mazzarell, G. A., and Chang, P. S., "Update on the Enhancement of FPL 400 MW Boiler Program," ASME Winter Conference, San Diego, CA, 1991.

38. *Fireside Corrosion and Fly Ash Erosion in Boilers*, EPRI, Palo Alto, CA: 1987. CS-5071.

39. *Possible Effects of the Chlorine Content of Coal on Fireside Corrosion in Pulverized Coal-Fired Boilers*, EPRI, Palo Alto, CA: 1997. TR-108107-V2.

40. Murphy, J. O., "Boiler Pressure Part Fabrication Techniques," TVA's Second Annual Boiler Technical Workshop, Nashville, TN, August 1996.

41. *Corrosion-Fatigue Boiler Tube Failures in Waterwalls and Economizers,* Vols. 1–5, EPRI, Palo Alto, CA: 1992–1996. TR-100455.

42. Sylvester, W. R., "Waterside Corrosion Fatigue Cracking – Is There a Single Cause and Solution?" TIS 8318, ABB C-E Services, Inc., Windsor, CT.

43. *Corrosion Studies for Low NO_x Burner Technology*, EPRI, Palo Alto, CA: 1997. TR-108750.

44. *Effect of Iron Sulfide on Furnace Wall Corrosion*, EPRI, Palo Alto, CA: 1998. TR-111152.

45. *Mitigation of Fireside Corrosion in Low NO_x Boilers - A State of the Art Assessment*, EPRI, Palo Alto, CA: 1999. TR-112823.

46. *State of Knowledge Assessment for Accelerated Waterwall Corrosion with Low NO_x Burners*, EPRI, Palo Alto, CA: 1997. TR-10775.

47. Nakagawa, K., et al., "High Temperature Corrosion of Waterwall Tube in Coal-Fired Combustion Gases," *Proceedings of High Temperature Corrosion,* Les Embiez, May 1992.

48. *Circumferential Cracking on the Waterwalls of Supercritical Boilers*, Vols. 1–2, EPRI, Palo Alto, CA: 1995. TR-104442.

49. Llinares, V., and Schmidt, S., "Peak Temperature Reduction in Superheater and Reheater Assemblies: Approaches and Solutions," ABB-CE Services, Inc., TIS-8599.

50. *Corrosion Problems in Coal-Fired Boiler Superheater and Reheater Tubes: Steam-Side Oxidation and Exfolation,* EPRI, Palo Alto, CA: 1981. CS-1811.

51. Borio, R., et al., "The Control of High-Temperature Fireside Corrosion in Utility Coal-Fired Boilers," U.S. Office of Coal Research. R and D Dept., No. 41, April 1969.

52. Mayer, P., and Manolescu, A. V., "Influence of Hydrogen Chloride on Corrosion of Boiler Steels in Synthetic Flue Gas," Corrosion, 36(7), 1980.

53. Raask, R., *Mineral Impurities in Coal Combustion,* Hemisphere Publishing Corp., Washington, D.C., 1985, pp. 342–343.

54. Fujikawa, H., and Makiura, H., "Selection of Stainless Steel Tubes to Minimize Hot Corrosion in Utility Boilers," *J. Mater for Energy Systems*, 4(3), 1982, pp. 160–167.

55. Latham, F. P., Flatley, T., and Morris, C. N., "Comparative Performance of Super-heated Steam Tube Materials in Pulverized Fuel-Fired Plant Environments," in *Corrosion Resistant Materials for Coal Conversion Systems,* D.B. Meadowcroft and M. I. Manning, eds., Applied Science, London, 1983, pp. 131–158.

56. Rahoi., D. W., "Controlling Fuel-Ash Corrosion with Nickel Alloys," *Met. Eng. Quart*., 14(2), 1974, pp. 44–51.

57. *Guidelines for the Control and Prevention of Fly Ash Erosion in Fossil-Fired Power Plants*, EPRI, Palo Alto, CA: 1994. TR-102432.

58. Chang, P. S., and Sinkfield, J., "TVA Johnsonville Unit 6 Boiler Flow Distribution," ASME International Conference on Power Engineering, Shanghai, China, 1995.

59. Chang, P. S., and LaRose, I. A., "TVA Colbert 3 Upper Furnace Flow Distribution Study," American Power Conference, Chicago, IL, 1994.

60. Kulig, J. S., "Upgrading Boilers and Components," Pacific Coast Electrical Association Engineering & Operating Conference, Irvine, CA, 1987.

61. Lundin, C. D., "Dissimilar Metal Welds-Transition Joints Literature Review," *Welding Journal*, February 1982.

62. *Dissimilar Weld Failure Analysis and Development,* Vols. 1–8, EPRI, Palo Alto, CA: 1985–1989. CS-4252.

63. Chang, P. S., and Stangarone, R., "Lessons learned in Using HR.3C Material," EPRI Sixth Maintenance Conference, Baltimore, MD, 1996.

64. Friedrich, J. L., "Extending the Life of Older Steam Generators," FW International Steam Generator Conference, East Hanover, NJ, September 1982.

65. *Remaining Life Assessment of Superheater and Reheater Tubes*, EPRI, Palo Alto, CA: 1988. CS-5564.

66. Nakoneczny, G. J., and Schultz, C., "Life Assessment of High-Temperature Headers," American Power Conference, Chicago, IL, April 1995.

67. *NDE Guidelines for Fossil Power Plants*: *Version 1.0*, EPRI, Palo Alto, CA: 1997. CD-108450.

68. Ganta, B. R., "An Analytical Study of a Secondary Outlet Header and Supporting System to Reduce Stub Tube Weldment and Borehole Cracking," TIS-8610, ABB C-E Services.

69. Yoder, L. W., "Design and Fabrication of Power Boilers," Conference for the Prevention of Accidents, San Juan, Puerto Rico, 1980.

70. "Criteria of the ASME Boiler and Pressure Vessel Code for Design by Analysis in Section III and VIII, Division 2," ASME Special Publication, 1989.

71. Grunloh, H. J., Ryder, R. H., Gattuso, A., Bloom, J. M., Lee, D. R., Schultz, C. C., Sutherland, D. D., Harris, D. O., and Dedhia, D. D., *An Integrated Approach to Life Assessment of Boiler Pressure Parts. Volume 4: BLESS Code User's Manual and Life Assessment Guidelines*, Report to EPRI on Research Project 2253-10. EPRI, Palo Alto, CA: 1992.

72. Liaw, P. K., Saxena, A., and Schaefer, J., "Estimating Remaining Life of Elevated Temperature Steam Pipes," *Engineering Fracture Mechanics*, Vol. 32, No. 5, 1989, p. 675.

73. Saxena, A., "PCPIPE Version 3.0: A Computer Code for Integrity Analysis of Elevated Temperature Steam Pipes," February 1989, Structural Integrity Associates, Inc., San Jose, CA.

74. Roberts, D. I., Saxena, A., Han, J., and Banetji, K., "Creep Crack Growth in Boiler and Steam Pipe Steels," EPRI CS-5585, Topical Report on Research Project 2253-10, Electric Power Research Institute, Palo Alto, CA, 1988.

75. Chang, P. S., and Nedelka, G. T., "Design Considerations in the Replacement of Cumberland SH Outlet Headers," ASME Piping and Pressure Vessel Conference, Minneapolis, MN, 1994.

76. "Evaluation of Axial and Circumferential Cracks in Superheater Outlet Header of Cumberland Unit No. 2," General Atomics Report No. 2908-320.

77. Lytle, R.I., *German Boiler Code TRD-301,* Annex I, 1993.

78. Ramanathan, R., "Thermoelastic, Transient, and Creep Analysis of the Header-Stub Tube Weld Connection and Life Expectancy Prediction for the Assembly," M. Sc. Thesis, Tennessee Technology University, 1995.

79. Bellanca, C., and Saelens, I., "P-91 Solves Superheater Outlet Header Cracking Problem," *Power Magazine*, 1993.

80. Smith, P. R., and Van Laan, T. J., *Piping and Pipe Support Systems,* McGraw Hill, 1987.

81. *Guidelines for the Evaluation of Seam-Welded Steam Pipes*, EPRI, Palo Alto, CA: 1987. CS-4774.

82. *Guidelines for the Evaluation of Seam-Welded High Energy Piping*, EPRI, Palo Alto, CA: 1995. TR-104631.

83. *Guidelines for the Evaluation of Seam-Welded High-Energy Piping*, EPRI, Palo Alto, CA: 1998. TR-111380.

84. "Industry Experience and Overview of Steam Activities," *Proceedings of the EPRI Conference on Fossil Plant Life Extension,* Washington. D.C., June 1986.

85. *Assessment of Seam-Welded Steel Piping in Fossil Power Plants*, EPRI, Palo Alto, CA: 1992. TR-101835.

86. Henry, J. F., Ellis, F. V., and Lundin, C. D., "The Influence of Flux Composition on the Elevated Temperature Properties of Cr-Mo Submerged Arc Weldments," WRC Bulletin 354, Welding Research Council, New York, NY, June 1990.

87. Tuliani, S. S., Boniszewski, T., and Eaton, N. F., "Notch Toughness of Commercial Submerged-Arc Weld Metal," *Weld. Met. Fabr.,* Vol 37, 1969.

88. Stevick, G. R., and Finnie, I., "Failure Assessment of Weldments at Elevated Temperature," *Proceedings of the 6th International Conference on Mechanical Behavior,* Kyoto, Japan, June 1991.

89. Buchheim, C. M., Osage, D. A., Brown, R. C., and Dobis, J. D., "Failure Investigation of a Low Chrome Long-Seam Weld in a High-Temperature Refinery Piping System," ASME PV & P Conference, New York, NY, 1994.

90. "*SLIC2: An Updated Computer Code for Analysis of Steam Line Cracking*," Failure Analysis Associates, Inc., developed for EPRI, Palo Alto, CA: 1987.

91. Bissell, A. M., Cane, B. J., and Delong, J. F., "Remanent Life Assessment of Seam Welded Pipework," *Proceedings of the1988 PVP Conference,* M1C-Vol. 28, PVP-Vol. 151, ASME, New York, NY, 1988.

92. Henry, J. F., and Randolph, R. D., "Seam Weld Failures in High-Energy Piping: Understanding Weldment Behavior," EPRI Piping Workshop, Charlotte, NC, September 1993.

93. Lundin, C. D., and Wang, Y., "Repair Welding of Service-Exposed Cr-Mo Steel Weldments," WRC Bulletin 348, Welding Research Council, New York, NY, 1998.

94. Prager, M., "Effects of Heat Treatment Variables on the Creep and Rupture Behavior of 2-1/4Cr-1Mo Steel," in *Understanding Variability in Creep and Rupture Behavior*, ASME Pressure Vessel and Piping Conference, June 22, 1988.

95. *Guidelines for Performing Probabilistic Analysis of Boiler Pressure Parts*, EPRI, Palo Alto, CA: 2000. 1000311.

96. *Corrosion Problems in Coal Fired Fossil Boiler Superheater and Reheater Tubes*, EPRI, Palo Alto, CA: 1981. CS-1811.

97. Dewitte M. and Stubbe, J., personal communication to D. A. Roberts of G.A. Technologies, San Diego, Laborolec Ca., Belgium, 1986.

98. Roberts, D. I., "Magnetic Oxide Thickness Time-Temperature Models for 2 ¼-1Mo Operating in High Pressure Steam," letter communication to R. Viswanthan from G. A. Technologies, San Diego, 1986.

99. Grunloh H. and Ryder, R. H., Interim Progress Report on EPRI Project RP2253-10, 1989.

100. Burrows, W. R., Michael, R., and A.W. Rankin, A. W., "A Wall Thickness Formula For High Pressure High Temperature Piping," ASME Transaction, April 1954, p. 427.

101. Hart, R. V., *Metals Technology*, 3, 1976.

102. Woodford, D. A., ASME Transaction, ASME, JEMT, 101, pp 331, 1979.

103. Bolton, C. J., Dyson, B. F. and KR. Williams, K. R., *Materials Science and Engineering*, 46*,* p.231, 1980.

104. Viswannathan, R., Paterson, S. R., Grunloh, H., and Gehl, S., "Life Assessment of Superheater/Reheater Tubes," EPRI Conference on Boiler Tube Failure, San Diego, CA., November 1991.

105. Paterson, S. R. and Tilley, R. M., "Instruction Manual for TUBELIFE III," EPRI, August 1994.

106. Dedhia, D. and Harris, D. O, "TULIP 1.2 –A Computer Code for Probabilistic Analysis of Superheater/Reheater Tubing," EPRI Software Manual Product ID- 1004304, November 2002

107. Dedhia, D., Harris, D. O., and Tilley, R. M., "A Computer Code for Evaluation of Crack Initiation and Growth in High Temperature Headers – BLESS-Headers 4.2," EPRI, January 2001.

108. Dedhia, D., Harris, D. O., and Tilley, R. M., "A Computer Code for Evaluation of Crack Growth in High Temperature Piping – BLESS-Pipes 4.2," EPRI, January 2001.

109. *Guidelines for the Evaluation of Seam-Welded High Energy Piping*, EPRI DRAFT Report, Research Projects 8046-04, 2819-24. EPRI, Palo Alto, CA: 1995. TR-104631.

110. Dedhia, D., Harris, D. O., and Tilley, R. M., "A Computer Code for Calculation of Critical Length of Axial Cracks in Pipes – BLESS - LBB 4.1," EPRI, January 2001.

111. Harris, D. O. and Woytowitz, P. J., "Fully Plastic J-Integrals for Through-Wall Axial Cracks in Pipes," ASTM 29th National Symposium on Fatigue and Fracture Mechanics, Stanford University, CA., June 1997.

112. *Dissimilar-Weld Failure Analysis and Development Volume 6: Weld Condition and Remaining Life Assessment Manual*. EPRI, Palo Alto, CA: 1988. CS-4542.

113. *Boiler Tube Failure Metallurgical Guide.* EPRI, Palo Alto, CA: 1993. TR-102433-V2.

A
USING LIFE ASSESSMENT TECHNIQUES TO PERFORM DESIGN EVALUATION

Introduction

The design of boiler pressure components is governed by the American Society of Mechanical Engineers (ASME) Boiler and Pressure Vessel Code, Section I. This Code does not explicitly provide a design life. Many techniques have been developed for the assessment of remaining life in boiler pressure components. Logically, one would think that these remaining life assessment techniques should be able to be used and provide values for the improvement of new design. They are good tools for verifying the past design practices and to evaluate different options in the new design. These techniques do not use safety factors in the actual evaluation. However, they also involve many assumptions and have limitations. Despite these assumptions and limitations, this appendix is promoting the use of remaining life assessment techniques developed from the boiler tube failure investigation efforts in the last decade to improve the new design and to increase the inherent reliability of the boiler pressure components. This appendix summarizes the ASME Section I design principles and describes four EPRI-developed remaining life assessment techniques/software, which can potentially be used to enhance the new design. The four EPRI software packages are:

- TUBELIFE. Deterministic analysis of remaining life assessment of high-temperature superheater (SH) and reheater (RH) tubes using steamside oxide scale thickness
- TULIP. Deterministic and probabilistic analyses of remaining life assessment of high-temperature superheater and reheater tubes using steamside oxide scale thickness
- BLESS. Boiler Life Evaluation and Simulation System for high-temperature headers and pipes
- PODIS. Prediction Damage In Service for dissimilar metal welds

ASME Boiler and Pressure Code, Section I Design

Background

The ASME Boiler and Pressure Vessel Code serves the objective of providing safe and economic boiler construction by using general design rules [69, 70]. Code changes are made at six-month intervals and become optional or mandatory within a given time frame. Materials permitted are listed by reference to ASME, American Society for Testing and Materials (ASTM), or American National Standards Institute (ANSI) specifications. Materials used in Code construction are

produced and supplied in accordance with specifications that have been developed by a national voluntary consensus standards system and approved for use by code-writing bodies. All material specifications are originally developed by the ASTM. When these specifications are considered suitable for code construction, they are included in Section II of the ASME Code. The prefix "S" is then added to the ASTM identification number (ASTM A-210, for example, becomes ASME SA-210). This helps identify materials that are approved for ASME construction. The SA specifications that are acceptable for Section I boiler construction are listed in PG-5, 6, 7, 8, and 9. The safety hazard imposed by chloride stress corrosion of austenitic materials in boilers is a serious consideration. Section I does not permit austenitic materials in water-wetted pressure parts of the boiler. They are permitted in the pressure parts handling steam, such as SHs or RHs, because stress corrosion is not a factor in these areas.

The ASME Code provides general rules and minimum requirements for the design and construction of boilers to ensure safety; it is not a design document that permits one to design a boiler exclusively from it. The Code considers safety uppermost and also allows the individual talent to be exercised in a rational manner. It is a normal practice for manufacturers to interpret the Code requirements and translate them into company standards. This eliminates the concern that each designer will make their own Code interpretations. Most boiler manufacturers have systems and procedures that allow them to design and manufacture boilers in an efficient manner while complying with the applicable Code rules and regulations.

ASME Code design methods are based on primary membrane stress formulas that include sufficient margin to limit bending or peak stresses to safe levels. ASME Code specifies the allowable stresses for approved materials. The safety factors that are used in setting the allowable primary membrane stresses are shown in Table A-1.

Table A-1
Design Safety Factors for Primary Membrane Stress

Safety Factor	Allowable Primary Membrane Stresses
Tensile strength: • Minimum room temperature • Strength at temperature	 4 4
Yield strength: • Minimum room temperature • Strength at temperature	 1.6 **1.6 ***
Creep rate: • 0.01% per 1000 h	 1.0
Creep stress: • To rupture in 100,000 h	 Average 1.5, minimum 1.25

* 1.1 for austenitic materials and specific nonferrous alloys

Design Methods

ASME Code, Section I does not provide detailed design rules. However, the Code does provide sufficient information for a safe design and construction of pressure-containing parts, and it still permits the use of design features that vary considerably between manufacturers. The Code does not provide rules or methods by which the temperature of a pressure part in operation is determined. A manufacturer must determine the expected operating temperature of all pressure parts by theoretical or empirical methods. Suitable margins must be added to these temperatures to cover variations such as firing and distribution imbalances and operational upsets to ensure that the design temperature will cover the worst possible operational situation. Once general design criteria are specified and the tube metal temperature is determined, then the tube material can be selected. The material selection should also consider the corrosion allowance and oxidation temperature limits.

For an ASME Boiler and Pressure Vessel (B&PV) Code, Section I design, the minimum tube wall thickness is related to the allowable stress, S, as follows:

$$t = PD /(2S + P) + 0.05\ D + e \qquad \textbf{Eq. A-1}$$

where

t = design minimum wall thickness

P = design pressure

D = outside diameter

e = factor for expanded tubes

S = ASME Code allowable stress

The minimum wall thickness for piping, drums, and headers is determined from the following formula:

$$t = PD/(2SE + 2YP) + C \qquad \textbf{Eq. A-2}$$

where

t = design minimum wall thickness

P = design pressure

D = outside diameter

S = ASME Code allowable stress

E = efficiency

Y = temperature coefficient

C = a factor for threading and stability

If the component being considered is a drum or header, the efficiency "E" must be determined for ligaments between tube holes. The Code provides formulas and rules to determine the ligament efficiencies, which include longitudinal, circumferential, and diagonal ligaments in consideration.

For openings that require compensation (for example, piping and header intersections), ASME Code, Section I requires that the material removed from the hole must be replaced by thickness additive to that required for pressure within a prescribed distance from the hole.

When a tube hole or opening exceeds a certain diameter limitation (where "built-in" or inherent compensation is not available), additional compensation must be provided in order for the rules of ligament efficiency to apply. Section I provides curves that show when inherent compensation is available for openings up to 8 in. (203.20 mm) in diameter.

In summary, the required thickness or allowable pressures are calculated using allowable stresses, which are essentially primary membrane stresses. Secondary bending or stress concentrations are not calculated in Section I. Based on past experiences, the ASME Code Committee believes that Code design formula, fabrication and construction practices, and allowable stresses include sufficient margins to limit bending or peak stresses to a safe level for normal operation conditions. The design must, however, take into account of external loadings due to, for example, system thermal expansion and unsupported weight of connecting piping. Unusual designs, cyclic operation, and other extraordinary conditions may require additional considerations.

The Code is a minimum requirement standard, and a manufacturer must decide what quality level is required from both product reliability and cost considerations. It is not unusual that manufacturers frequently find it desirable to exceed the minimum Code requirements.

Design Limitations

The design of boiler pressure components to ensure reliability is a complex issue as demonstrated in the previous descriptions. It is useful to review the past boiler tube failure history and root cause analysis results and to correlate the results to the design basis of the tube section in question. The evaluation can then determine the relative contribution of various factors—for example, design inadequacies, fabrication quality, operation parameters, maintenance issues, and in-service degradation—to the failure.

Boiler tubes are typically fabricated with wall thicknesses of 8–12% thicker than the specified minimum wall thickness. The operating pressure is typically 5–10% less than the design pressure. The design temperature is usually higher than the service temperature unless the modes of operation or fuels have been changed. The Code hoop stress formula is conservative. If tube wastage (erosion/corrosion) and internal oxide/deposit buildup did not occur, then tubes operating below the creep range would never be expected to fail. Even tubes operating within the

creep range should be expected to have lives in excess of 30 years. Unfortunately, tube wastage and internal oxide/deposit buildup are usually present. In addition, the ASME Code, Section I design codes do not specifically address:

- Stresses in bends
- Local stresses
- Welds, for example, dissimilar metal weld (DMW)
- In-service degradation

Probabilistic Analysis for Remaining Life Assessment

The discipline of life assessment applies engineering analysis techniques to predict when failure of components will occur. Over the years, failure analysts have discovered that most actual failures can be explained in terms of a generalized failure process. In this process, the amount of damage in a component increases with time to a critical level at which the component "fails" and is no longer able to fulfill its intended function. In order to assess the remaining life of a boiler pressure component subject to such damage accumulation, three types of information must be available:

- Degree of damage currently present in the component
- Rate of damage accumulation
- Degree of damage required to cause of failure

Thus, if an estimate of the current damage—along with a damage accumulation rule and a failure criterion—is known, then component remaining life can be assessed. The required rules governing damage accumulation and critical damage can usually be derived with some confidence based on knowledge of the damage process involved. Typically, deterministic models are used in the analysis. To account for inaccuracies or uncertainties from both model and input data, conservative safety factors are normally added, which prohibits the optimum balancing of costs and benefits. Another approach is performing a "best-case/worst-case" type of analysis. Unfortunately, a factor of 10 differences between best- and worst-case lives is not uncommon. There is little chance that a component will fail before its worst-case life is reached. On the other hand, using the best-case life may have an increased risk of premature failure. The alternative to this single value, or deterministic, method is a probabilistic approach. Though more involved, the probabilistic approach automatically considers uncertainty in the inputs and provides a more realistic basis for decision making.

Probabilistic techniques have been used in other industries to provide a risk-based and a more realistic basis for economic decision making. EPRI computer codes such as Boiler Life Evaluation and Simulation System (BLESS) and Tube Life Probability (TULIP) incorporate options to allow probabilistic analyses. Probabilistic results are generated by running a series of analyses in which key input parameters are varied to reflect actual variations occurring in the similar components. These results are generally expressed as failure probabilities (or failure rates) versus time.

Guidelines for performing probabilistic analyses for boiler pressure components are provided in 1000311, *Guidelines for Performing Probabilistic Analysis of Boiler Pressure Parts* [95]. The probabilistic approach presented in this report focuses on probabilities of damage/failure associated with crack initiation and growth, which are leading causes of material degradation and component failure. Statistical background information and the Monte Carlo simulation technique are also presented. When using probabilistic methodologies, the following conditions are encountered:

- Lifetime deterministic models are available.
- Scatter and uncertainties in inputs to the models usually preclude accurate deterministic results.
- Probabilistic lifetime models can be obtained by quantifying the scatter and uncertainty of the input data and incorporating these data into the underlying deterministic lifetime model.
- Numerical procedures for generation of failure probabilities are available, and numerical results can usually be obtained using a personal computer.
- Probabilistic results can be used in analyses of expected future operating costs, which are of great use in component life management.

More descriptions can be found in the BLESS and TULIP sections of this appendix.

Using Life Assessment Techniques to Perform Design Evaluation of Superheater/Reheater Tubes

Background

The main consideration in the design of SH/RH tubes is the creep strength. The creep strength is related to the tube metal temperature, stresses, and operating time. Theoretically, tube metal temperature can be calculated from detailed physical models based on fundamental physics. Solving the governing equations of these models requires detailed data of steam pressure, steam temperature, steam flow rate, steamside and fireside film coefficients, local and bulk flue gas temperature, flue gas flow rate, flue gas ash composition, growth characteristics of the steamside and fireside scales, and thermal conductivities for all heat transfer mediums. All of the factors involved in the tube metal temperature calculation are subject to change in the actual operating conditions. Review of the past SH and RH tube failure histories indicate that many failures are often the result of localized conditions arising from wide variations in temperature distribution in the tube bank. In the actual design, many assumptions, for example, heat transfer coefficients, must be made. Upset factors are also applied to cover uneven distribution for steam flow, flue gas flow, and high spot heat absorption rate. The design information depends on the boiler manufacturers' databases and experiences. It may not be the same from one boiler manufacturer to another. ASME Code allowable stresses are then applied to cover uncertainties in material, fabrication tolerances, and other unaccounted factors.

Service degradation such as corrosion, erosion, and internal oxide thickness growth occurs. It is desirable to know the health status of these tubes to determine the suitability for continuous operation after units are placed in operation for a period of time.

Several techniques are available for assessing the remaining life of SH and RH tubes [2, 65]. One of the techniques is the use of internal oxide scale thickness to estimate the actual operating temperature. Extensive data in literature have shown that in relatively pure steam, the growth of oxide scales under isothermal conditions is a function of temperature and time of exposure and obeys specific rate laws. In this methodology, the tube's steamside oxide scale thickness is measured by ultrasonic testing. The tube's current dimensions are used to calculate the effective stress. Knowing the internal oxide scale thickness and operating histories, the remaining life of the SH and RH tubes can be predicted by a computation method based on the Larson-Miller parameters.

EPRI research has further refined this approach by applying internal oxide growth and corrosion wastage laws. EPRI has developed the TUBELIFE and TULIP computer codes, which incorporate these rate laws to assess the remaining life of the high-temperature boiler tubes. Uncertainties in the use of this life prediction procedure include:

- Choice of oxide growth law
- Choice of fireside corrosion/erosion rate law
- Choice of stress rupture curve and stress formula
- In-service degradation
- Validity of the life fraction rule

The nature and magnitude of the uncertainties associated with each of these issues are described in the following sections.

Oxide Scale Growth Laws

Several expressions are used in the industry and are provided in Table A-2 [2]. The general forms of the expressions for standard rate laws in the temperature range from 950–1150°F (510 to 620°C) are shown in Table A-3 [2]. A comparison of the actual versus estimated temperatures show that the rate law proposed by Roberts most closely approximated the actual temperature measurements. All other rate law expressions overpredicted the temperature.

Table A-2
Expressions for Oxide-Growth Kinetics in Cr-Mo Steels

No.	Expression*	Steel	Units	Reference
1	$\log x = -7.1438 + 2.1761 \times 10^{-4} T(20 + \log t)$ [T below FeO formation]	1–3%Cr	x in mills T in °R	96
2	$y^2 = kt$ For 1Cr-1/2Mo: $\log k = (-7380/T) + 2.23$ [T •1085°F (585°C)] $\log k = (-48{,}333/T) + 49.28$ [T >1085°F (585°C)] For 2-1/4Cr-1Mo: $\log k = (-7380/T) + 1.98$ [T •1103°F (595°C)] $\log k = (-48{,}333/T) + 49.2$ [T >1103°F (595°C)]	 1Cr-1/2Mo 1Cr-1/2Mo 2-1/4Cr-1Mo 2-1/4Cr-1Mo	T in °K y in mm	97
3	$\log x = -6.8398 + 2.83 \times 10^{-4} T(13.62+\log t)$ [T range, 800–1200°F (429–649°C)]	2-1/4Cr-1Mo	x in mills T in °R	65
4	$x = cpt/(1 + pt) + Et$ [T range, 800–1100°F (428–593°C)] where log (coefficient) = $b_o + b_1T + b_2T^2$, with b_o, b_1, and b_2 values as follows:	2-1/4Cr-1Mo	x in µm T in °R	98

	b_o	b_1	b_2
c	13.2413	-2.58×10^{-2}	1.4319×10^{-5}
p	-5.7267	4.7931×10^{-3}	-2.0905×10^{-6}
E	6.6488	-2.4771×10^{-2}	1.5425×10^{-5}

* x is oxide scale thickness; y is metal loss (penetration); T is temperature, t is time in hours; all logarithms to base 10. °R = °F + 460; °K = °C + 273; 1 mm = 10^3 µm = 40 mils; y = 0.42x.

Table A-3
General Forms of the Oxide Correlations for Cr-Mo Steels

General Form of Expression *	Approximate Oxide-Growth Law
Rehn and Apblett [96]: log x = A + B (LMP)	$x^3 = kt$
Patterson and Rettig [65]: log x = A + B (LMP)	$x^{2.1 \text{ to } 2.6} = kt$
Dewitte and Stubbe [97]: $x^2 = kt$	$x^2 = kt$
D. I. Roberts [98]: x = At/(B + Ct) + Dt	x = kt
* x is oxide scale thickness; t is time, in hours; k is oxide-scale growth-law rate constant; A, B, C, and D are coefficients; LMP is Larson-Miller parameter.	

Choice of Fireside Corrosion Rate Law

During service, SH and RH tubes will oxidize according to the reactions:

$$4Fe + 3O_2 \longrightarrow Fe_2O_3 \quad \textbf{Eq. A-3}$$

Metal Oxygen Hematite

$$3Fe + 2O_2 \longrightarrow Fe_3O_4 \quad \textbf{Eq. A-4}$$

Metal Oxygen Magnetite

If thick steamside scales are present and the tube is exposed to temperatures approaching or above 1100°F (593°C), then wustite can also form. Formation of an oxide scale results in a loss in wall thickness and a corresponding increase in stress level. The rate of fireside oxidation and associated wastage in the corrosion environment rate can be accelerated due to the following:

- Exfoliation (for example, spalling) of the oxide
- Liquid ash corrosion
- Flyash and/or sootblower oxidation-erosion

Because all of these wastage mechanisms are kinetically controlled, the hottest tubes (the tubes with the thickest steamside oxide scales) commonly experience the greatest wastage rates.

The wastage rate predictive model used in TUBELIFE is given as follows:

$$K_{WR} = (b(t_1) - b(t_2))/ (t_2 - t_1) \quad \textbf{Eq. A-5}$$

where

K_{WR} = wastage rate, in. (mm) per hour

b(x) = minimum outside radius at time = x, in. (mm)

t_1, t_2 = service hours

This simple, linear wastage rate algorithm provides adequate forecasts of wastage given that periodic wall thickness surveys are used to update the progression of damage. More recent predictive models include the inside surface wall loss due to steamside oxide growth and include more fundamental correlations between steamside scale growth and fireside wastage rates. The objectives of these improved models are to develop an improved understanding of the underlying wastage rate mechanism and to improve the ability to forecast nonlinear wastage rates.

Choice of Stress Rupture Curve and Stress Formula

Choice of either the lower bound stress rupture curve or the mean bound curve can affect the remaining life estimates. In addition, the issue of selecting the appropriate stress formula to calculate the equivalent stress can also affect the results. A variety of formulas have been in use to relate the pressure stress in a tube to an equivalent uniaxial stress. Because the vast majority of creep-rupture data available for 2-1/4Cr-1Mo and 1-1/4Cr-1/2Mo have been generated by uniaxial tests, the use of such data as a basis for failure criteria for tubes requires the establishment of a relationship between the transient, multiaxial stress state in a pressurized tube and the steady, uniform stress state in a uniaxially loaded tensile specimen.

Grunloh and Ryder have conducted accelerated creep rupture tests to establish this relationship [99]. A computer-based worksheet was developed to calculate the stresses in a tube corresponding to a given pressure, using a number of stress formulas, a majority of which can be found in a paper by Burrows, Michael, and Rankin [100]. This worksheet was also designed to calculate the difference in value between each stress value and a given equivalent stress. Therefore, by inputting tube geometry, internal pressure, and the equivalent stress, the stress formula which consistently yields a value closest to the equivalent stress can be readily determined. A ranking of the stress formulas was done to determine the formula which most closely matched the equivalent stress for the T11 and T22 accelerated test series. The best match was found to be the Nadai Equivalent Stress, evaluated at the OD of the tube, with n = 6 (exponent in power function expressing stress-strain diagram). This formula is based on a modified energy criterion of failure, a plastic stress distribution, and a power function stress-strain diagram. Two other formulas yielding good equivalent stress approximations were the Von Mises Equivalent Stress, evaluated at the tube midwall, and the common, or average, hoop stress. The common formula is very similar to the mean diameter hoop stress formula with the difference that d denotes the internal diameter, rather than the mean diameter.

Selection of the appropriate stress formula must also be considered in the context of the specific geometry of the tube involved. Equation A-6 illustrates how the stress/pressure ratio varies with the b/a ratio or t/b ratios, where t is the wall thickness and b is the outer radius. As the b/a or t/b ratios become small, the magnitudes of the stress as calculated by the different formulas approach each other, whereas at large values of b/a (or t/b), the calculated stresses become appreciably different. This means that for thick-walled SH tubes, the choice of the correct stress formula is quite important. On the other hand, for thin-walled RH tubes and for thick-walled SH tubes under severe wall thinning conditions, the choice of the correct stress formula is not crucial.

In-Service Degradation

Another limitation is that the procedure for calculating creep life consumption uses standard Larson-Miller plots applicable to virgin materials and does not take cognizance of service-induced softening. A model that explicitly takes into account the decreased rupture life due to softening has been developed for 2-1/4Cr-1Mo steels by Grunloh and Ryder, by incorporating the ultimate tensile strength (UTS) in the Larson-Miller parameter for rupture [99].

The equations used for the correction were the following:

$t_{r(o)} = [(1 - Z\, t_{r(act)})^{(1-2n)} - 1] / [z\,(2n - 1)]$ **Eq. A-6**

$Z = x / (R\, t_{r(act)})$ where $x^2 = K\, t_{r(act)})\, 3600$ **Eq. A-7**

$K = 10^{[-70.2 + 1.36\ x10^{**}5\ (1/T) - 7.4x10^{**}7(1/T)^{**}2]}$ at T <888°K (615°C) **Eq. A-8**

and $K = 10^{[-3.505 - 6552\ (1/T)]}$ at T >888°K (615°C) **Eq. A-9**

where $t_{r(o)}$ is the calculated rupture life without oxide effects, $t_{r\,(act)}$ is the actual hours to rupture, n is a creep constant with an assumed value of 8, R is the original creep specimen radius in centimeters, x is the oxide thickness in centimeters, K is the oxide growth constant in centimeters squared per second, and T is the temperature in degrees Kelvin.

Once the correction was made, algorithms were developed which gave the best fit to the rupture data.

$$LMP = 40975 + 57(UTS) - 5225 \log \sigma - 2450(\log \sigma)^2 \quad \textbf{Eq. A-10}$$

where

$LMP = T\,(20 + \log t_r)$

T = the temperature in Rankine units

t_r = the time-to-rupture in hours

UTS = the ultimate tensile strength at room temperature in ksi

σ = the applied stress in ksi

To use Equation A-10 correctly, the virgin material's tensile strength must be known at the beginning of service and then constantly updated during the damage calculation of the test or service life using the aging correction factors. This can be done in a multi-step procedure by calculating a current LMP from the current tensile strength at any given time thus resulting in the use of a continuously changing time-to-rupture, t_r, as real time progresses. The aging effect on UTS was also found to be based on a Larson-Miller parameter formulation but using a constant of 10 instead of 20. The model is represented by the following equations:

$UTS(actual) = UTS(virgin) \times K(age)$ **Eq. A-11**

$K(age) = 3.033 - 1.404 \times 10^{-4}\, LMP(a) + 1.679x10^{-9}\, (LMP(a))^2$ for LMP(a) >18631.2

Eq. A-12

$K(age) = 1.0$ for $LMP(a) \leq 18631.2$ **Eq. A-13**

where

UTS(actual) = the ultimate tensile strength used in Equation A-10 in ksi

UTS(virgin) = the ultimate tensile strength of virgin material, in ksi

K(age) = the aging constant

LMP(a) = the parameter for aging = T (10 + log t)

T = the aging temperature expressed in Rankine units

Equations A-11, A-12, and A-13 can be used for updating the tensile strength during a damage calculation as well as for estimating a beginning strength prior to service (if one is not known).

Validity of the Life Fraction Rule

The TUBELIFE III code uses the life fraction rule (LFR) for creep damage summation and for establishing a failure criterion. The LFR states that:

$$\sum t_i / t_r = 1 \text{ at failure} \qquad \textbf{Eq. A-14}$$

where t_i is the time spent at any given stress and temperature and t_r is the rupture life under those conditions. When the damage fractions incurred under different sets of stress-temperature conditions add up to unity, failure is presumed to occur. Hart [100], Woodford [101], and Bolton, et. al. [102] have demonstrated that the LFR is valid for temperature changes but not for stress changes. In a multi-client sponsored project completed at ERA Technology Ltd., an extensive body of long-time data has been generated, with the specific intent of verifying the LFR for varying temperature conditions and the results indicate that LFR can be above or below 1 depending on the material and stress formula used.

Two EPRI-developed computer codes in which steamside oxide scale thickness is used to assess the remaining life of high-temperature SH and RH tubes are:

- TUBELIFE III. Deterministic analysis
- TULIP 1.2. Deterministic and probabilistic analysis

The damage and degradation criterion used in TULIP and TUBELIFE III are not the same. Both TUBELIFE III and TULIP 1.2 can perform deterministic analysis. TULIP 1.2 can also perform probabilistic analysis. Using probabilistic methodologies for life assessment of boiler components provides a more realistic basis for managing the inspection, maintenance, repair, and replacement actions for those components. Such a realistic basis also couples with economic parameters to allow utilities to make better overall decisions in their efforts to reduce operating and maintenance costs. In the competitive environment of power generation, more accurate assessments of risks and benefits must be incorporated into utility decision making. Probabilistic techniques are a proven way to refine the basis for such decisions.

TUBELIFE III

General

TUBELIFE III provides a mathematical tool to compute past and future tube stress, temperature, and creep damage SH and RH tubes [104, 105]. The remaining creep life is calculated from hoop stress and temperature histories. Hoop stress is determined from tube wall thickness measurements and internal steam pressure. Temperature is calculated from the heat flow through steamside oxide scale, tube wall, and other insulators. A variety of fireside wastage options is provided. It incorporates the stress-rupture properties and steamside oxidation kinetics for commonly used furnace tube materials as listed in Table A-4. The oxidation kinetics has been compiled for use in the temperature range of 900–1100°F (482–593°C). The temperature increase that accompanies the buildup of steamside scale is automatically accounted. It also provides the ability to calculate the change of creep life due to chemical cleaning and operation change, that is, excursions.

Table A-4
Materials Included in TUBELIFE III

Material	Type
SA-178 Grade A*	Low-carbon steel
SA-210 Grade A-1	Medium-carbon steel
SA-209 Grade T1a	Carbon, 1/2 moly
SA-213 Grade T2	1/2 chrome, 1/2 moly
SA-213 Grade T5	5 chrome, 1/2 moly
SA-213 Grade T9	9 chrome, 1 moly
SA-213 Grade T11	1-1/4 chrome, 1/2 moly
SA-213 Grade T12	1 chrome, 1/2 moly
SA-213 Grade T21	3 chrome, 1 moly
SA-213 Grade T22	2-1/4 chrome, 1 moly
SA-213 Grade T91	9 chrome, 1 moly with V, C_b and N
SA-213 Grade TP304	Stainless steel

* Electric resistance welded tube

The tube and unit specific data required by TUBELIFE III to perform the creep life calculations are divided into two categories, that is, input data and advanced options input.

Input data consists of information that is readily available, such as tube material and dimensional measurements. Advanced options input contains thermodynamic and unit-specific parameters that are not readily available. Default values for these parameters should be adequate for most applications.

The general input data includes the following:

Item	Description
Circuitry	Select between SH, RH, or penthouse. The heat flux for SH and RH tubes is an Advanced Option input (default values are supplied). Penthouse tubes are assumed to have zero heat flux.
Operating time	The service time of the tube in hours.
Steam pressure	The operating steam pressure averaged over the exposure time of the tube.
Material	The tubing material selection list is given in Table I. A material option is also included in which the user enters the material property coefficients in the Advanced Option screen.
ID maximum	The maximum inside diameter of the tube sample.
ID minimum	The minimum inside diameter of the tube sample.
Wall maximum	The maximum wall thickness of the tube sample. It represents the original wall thickness. The value entered is usually the current maximum measurement or the original specified minimum wall thickness plus 10–15%.
Wall minimum	The minimum wall thickness from the current tube dimensions. This and the maximum wall thickness are the basis for estimating the wall-thinning rate.
Scale thickness	The steamside oxide scale thickness in mils. This oxide thickness measurement is taken from the hot side of the tube sample.
Chemical cleaning	The time in hours when chemical cleaning has been or will be performed. The program assumes that all steamside scale is removed by the cleaning operation. Chemical cleaning will lower the temperature of an externally heated tube.
Temperature change	The effect of temperature change on a tube's creep life can be determined. It is in addition to the temperature change that results from growth of steamside oxide scale.
Material failure line	This is the failure line based on the statistical percentile of failed tubes from which the stress-rupture curves were derived. For example, 50% describes the mean failure line, at which 50% of the test samples failed; and 5% gives the minimum failure line at which 5% of the test samples failed. The 5% line gives conservative results and is useful in predicting when a tube may be first expected to fail.
Time increment	The past and future life of the tube is divided into many small time increments. The increments are usually selected within the range of 1000–10,000 hours. Longer increments give quicker calculating times. Smaller increments give more precision.

The Advanced Option Input Data section describes program input that deals with tube parameters that may be beyond the scope of normal usage, but which may be useful in fine tuning the program for specific uses. The input items are described in the following:

Item	Description
Relative oxidation potential	The oxidation kinetics of steamside oxide scale has been experimentally determined to vary from unit to unit. This variable is termed the relative oxidation potential and is represented by a number from 1 to 99. the average is 50. Higher numbers indicate higher oxidation rates. The relative oxidation potential may be determined by plotting steamside oxide thickness as a function of thermocouple tube measurements obtained from penthouse tubes and comparing these values to the values predicted by the program. The heat flux for penthouse tubes is taken as zero.
Oxide conductivity	The steamside oxide scale provides an insulating layer between the tube metal and the steam flow. The thermal conductivity of the oxide scale is entered in units of BTU In/(h ft^2 °F).
Wall temperature location	The tube metal temperature of heated tubes varies from the internal to external surfaces due to the heat flux. The effective tube metal temperature is selected from this range by entering a number from 0 to 100. Zero selects the internal surface temperature and 100 selects the external surface temperature. Whatever temperature location is selected, the tube metal effective temperature will change with time as the steamside oxide scale grows in thickness.
Superheater tube heat flux	The superheater tube heat flux is entered in units of BTU/(h ft^2). Typical values range from 10,000–20,000.
Reheater tube heat flux	The reheater tube heat flux is entered in units of BTU/(h ft^2). Typical values range from 6000–12,000.
Wall wastage mode	The wall wastage mode may be selected from three options: linear, bilinear, and Arrhenius. The linear option assumes that the wall loss rate is constant with respect to time. It does not have a temperature term. The program calculates the wall loss rate from the maximum and minimum wall thicknesses entered in the Input Data screen. Either the bilinear or Arrhenius options may be used to represent the wall wastage that occurs if the tube is subject to liquid ash corrosion. The relatively low wastage rate in the low-temperature regime is by simple oxidation. The accelerated wastage rate in the high-temperature regime is due to liquid ash corrosion. The bilinear option assumes that the wall loss rate consists of two linear regimes connected at an inflection point. The user is required to enter the temperature at which the inflection point occurs and the wall loss rate ratio between the high- and low-temperature wall loss regimes. The program calculates the absolute wall loss rates from the maximum and minimum wall thicknesses entered in the Input Data screen. The Arrhenius option describes the wall loss rate as a function of temperature by the following equation:

Item	Description
Wall wastage mode (cont.)	Wall Loss Rate = A x EXP(B/R) where, A = Proportionality coefficient B = Exponent coefficient R = Degrees Rankine The exponent coefficient (B) will normally have different values above and below a critical temperature. The user will enter the critical temperature (in °F) as well as the exponent coefficients. The program calculates the proportionality coefficient (A) from the maximum and minimum wall thicknesses entered as Input Data. The exponent coefficients can be determined experimentally from tube samples by measuring the slope of the logarithm of the tube wall loss plotted as a function of the reciprocal of the tube temperature.

Low-Temperature and Low-Oxide Thickness Limitations

The oxidation kinetics used in the TUBELIFE III program are based on steamside oxide scale thickness and thermocouple temperature measurements obtained from operating boilers. These measurements were performed on ASME SA-213 Grade T22 penthouse furnace tubes with service temperatures in the range of approximately 900–1100°F (482–593°C). Extrapolating to temperatures outside this range may introduce uncertainties and, thus, may not provide accurate remaining creep life estimates. The uncertainties will be greatest for materials such as carbon steel under low service temperatures (that is, below 850°F [454°C]). The oxide scale thickness versus temperature curve in these conditions becomes relatively flat. Because the TUBELIFE III program uses the measured oxide thickness to calculate the temperature history of the tube, small errors in oxide thickness measurements will result in relatively large errors in the calculated temperature, with corresponding large errors in estimated remaining creep life. Despite these limitations, the program includes carbon steel because it may provide a useful tool in estimating the relative effect of operational changes that involve chemical cleaning or modification of tube temperatures even at low temperatures and thin oxide thickness where absolute results may be approximate.

Stainless Steel Application

ASME SA-213 Grades TP304 and TPS47H stainless steel have been included in this program even though their oxidation kinetics are too slow and inexact to be appropriate for the oxide scale thickness to temperature correlation. Including this stainless steel material in the program is useful because it allows the user to determine the relative creep life as a function of changing operating conditions of temperature and stress, and allows the user to estimate the creep life if the stainless steel tube metal temperature can be determined by alternate means.

Tube Life Probability (TULIP) Software

TULIP is an acronym for TUbe LIfe Probability and is a computer code for predicting the lifetime of high-temperature SH/RH tubing in fossil-fired power plants [106]. TULIP software

can perform deterministic or probabilistic analyses. For deterministic analysis, TULIP uses the median material properties by default. The probabilistic analysis of lifetime is based on a deterministic model of creep rupture that uses continuum creep damage mechanics. Some of the material properties and operating conditions are considered to be random variables, and Monte Carlo simulation is used to calculate the probability of creep rupture as a function of time. The random material properties are used to account for the scatter in these properties, and the random operating conditions are used to account for the uncertainty in these conditions. The use of continuum creep damage mechanics allows the several complications in the problem to be considered in a sound mechanics-based fashion. Such complications include a time-dependent oxide thickness with chemical cleaning times, time-dependent OD dimension due to fireside corrosion, time-dependent radial variation of temperature and stress, and thermal strains. These complications give rise to appreciable spatial and temporal variations that are difficult to account for when using conventional Larson-Miller creep rupture with Robinson's rule.

The Monte Carlo simulation can be performed by the conventional method, or the importance sampling technique can be used. The conventional method is preferred but can result in excessive computer run time if low failure probabilities are encountered. The importance sampling technique involves shifting the median values of key input variables. Importance sampling is used to facilitate the generation of low failure probability results without an excessive number of Monte Carlo trials.

TULIP allows the analysis to be performed with either initial condition or current condition. If current condition is selected, the internal oxide scale thickness is required from the field measurement. Material properties can be inputted or selected from the material library. The TULIP material library includes the following materials:

- SA-178 Grade A - low-carbon steel
- SA-210 Grade A-1 - medium-carbon material
- SA-209 Grade T1a - C, 1/2Mo
- SA-213 Grade T2 - 1/2Cr, 1/2Mo
- SA-213 Grade T5 - 5Cr, 1/2Mo
- SA-213 Grade T9 - 9Cr, 1/2Mo
- SA-213 Grade T11 - 1-1/4Cr, 1/2Mo
- SA-213 Grade T12 - 1Cr, 1/2Mo
- SA-213 Grade T21 - 3Cr, 1Mo
- SA-213 Grade T22 - 2-1/4Cr, 1Mo
- SA-213 Grade T91 - 9Cr, 1Mo with V, C_b and N
- SA-213 Grade TP304 - austenitic stainless

Using TUBELIFE III and TULIP as a Design Tool

TULIP has an option for performing analysis in initial design conditions without a steamside oxide scale thickness reading. Although TUBELIFE III and TULIP were not developed as design tools, they can be used to evaluate the design parameters and to maximize the service life by allowing the following types of analyses:

- Assess temperature and pressure variation impact on the boiler tube life.
- Assess tube thickness deviations, including original thickness selection and wastage rate on the boiler tube life.
- Suggest chemical cleaning timing to prolong the boiler tube life.
- Assess the impact of heat flux variations on the boiler tube life.
- Evaluate the design life between the different tube materials.

The tube temperatures can be obtained from boiler manufacturers or estimated by these computer codes. Through the calculation, different design options can be evaluated, and the optimized design can be selected. These computer code calculations can also establish a prospective design life for high-temperature boiler tubes, which can be used for future life monitoring and management. Several examples are presented in the TUBELIFE III and TULIP 1.2 manual, demonstrating the program usage for remaining life assessment. It can be altered to assess the new design options.

High-Temperature Headers

Background

High-temperature SH and RH headers operate at high temperatures in excess of 900°F (482°C) and are subject to thermal and pressure stresses that can lead to cracking and failure for both 1-1/4Cr-1/2Mo (SA-335 P11) and 2-1/4Cr-1Mo (SA-335 P22) materials. Header failure investigations results indicated that the mechanisms leading to the cracking of these headers could not be explained by simple creep. Hot reheat pipe failures have occurred at the seam welded due to creep-related problems.

Header Damage Considerations

There are several major damage mechanisms that can be improved with proper design considerations.

Ligament Cracking

The ligament and bore hole cracking are significant life-limiting problems in high-temperature headers. Severe ligament cracking is considered as nonrepairable and requires header replacement. Ligament cracking generally initiates as numerous longitudinal cracks in tube bore

holes. These cracks extend to the inside surface of the header, appearing as a "starburst" pattern when viewed from the inside of the header. Some of these cracks continue to grow along the inside surface of the header, eventually linking up with similar cracks emanating from adjacent tube bore holes. These cracks continue to propagate, growing from the header ID toward the OD and between adjacent bore holes. Eventually, the cracks can be advanced through the entire ligament and causes failure.

Thermal cycling that results from on/off operation accelerates both the initiation and propagation of ligament cracks. Two competing mechanisms may be responsible for the initiation of the cracks.

- Oxide notching. One of those mechanisms is referred to as "oxide notching." The high-temperature steam environment is responsible for relatively rapid oxidation in the low-alloy header materials. The oxidation occurs during periods of sustained operation at elevated temperature and is subsequently fractured during the tensile-going straining that occurs during a shutdown. Fracture of the oxide scale exposes the metal, reestablishing the initial high rate of oxidation.
- Localized creep and thermal fatigue. The other mechanism that can result in the initiation of ligament cracking is a combination of localized creep damage and thermal fatigue damage. The intended elevated temperature service requires a relatively low allowable design stress in order to avoid excessive creep deformation, which results in relatively thick header walls. The loss of load resisting area that results from penetrations, such as bore holes, results in further increases in the design wall thickness. The temperature gradients, and thus thermal stresses, that result from the thermal cycling during on/off operation, become more severe as the design wall thickness increases. As with any geometric discontinuity, bore holes result in higher localized stresses resulting from pressure loading. Bore holes also have a significant effect on the thermal stresses that result from rapid changes in the steam temperature. Any thermal upset, or temperature variation across the width of the boiler, may result in a mismatch between the temperature of the steam within the bore holes and that within the main cavity of the header at the same position. The localized heating/cooling that results from this temperature mismatch can be a source of significant thermal stress. In addition, the ligament metal temperatures may locally exceed the design outlet steam temperature for long periods of time. This ligament overheating can accelerate creep damage, oxide growth, and crack growth rates.

Weldment Cracking

In addition to the serious base metal ligament cracking problem, elevated temperature service headers also experience significant cracking problems at weldments. Although this cracking has been observed in longitudinal seam welds, girth welds, and nozzle-to-header welds, the most frequent incidence is in tube stub-to-header welds. Although tube stub-to-header welds are readily detected and repaired, they can result in costly forced outages.

Local differences in yield strength and creep strength within weldments can result in metallurgical notch effects quite similar to those of geometric notches. The notch effects of strain concentration and increased triaxiality of the stress state can be especially detrimental at areas of

locally low ductility within the weldment. In addition to this notch effect of low ductility interaction, header and pipe weld cracking can still require some additional driving force beyond the pressure stress. For example, cracking at girth welds and nozzle-to-header welds can often be accelerated by the interaction of piping and support loading. Tube stub-to-header weld cracking may be accelerated by the differential creep rates between the tube and header and is frequently exacerbated by local overheating as in header ligament cracking.

BLESS Modeling Considerations

The primary focus of the Boiler Life Evaluation and Simulation System (BLESS) is the estimation of the initiation and propagation of header ligament cracking [66]. A boiler header is a complicated three-dimensional (3D) structure. The detailed calculation of time-dependent temperature and stress distributions is a formidable, time-consuming task, requiring 3D finite element analysis techniques. It is also required to address both the time-independent plasticity and time-dependent creep inelastic behavior of the header material in order to obtain realistic damage estimates. Thus, a detailed finite element analysis further requires that nonlinear material behavior be included. It is generally not practical to perform those detailed 3D nonlinear finite element analyses for a complete, complex boiler service history. In order to make the problem solution practical, certain simplifications are required. Appropriate simplifying assumptions were made in the development of the BLESS code.

The major simplification of the BLESS code is that the transient temperatures and stresses are based on a simple thick-walled cylinder model, for example, classical plain strain model. The temperatures and stresses vary only through the wall in this one-dimensional (1D) model. Stress and temperature predictions of this 1D model are representative of the conditions far removed from the local effects of the bore holes. However, the temperatures and stresses from the 1D model are modified in BLESS to represent the important features of the actual temperatures and stresses at critical areas of the specific header geometry. The 1D temperatures and stresses are modified using closed-form empirical equations that were developed using the results of detailed 3D linear finite element analyses of several headers subjected to various transient and steady-state operating conditions.

The development of closed-form equations, capable of appropriately modifying temperatures and stresses from a 1D model to approximate the transient conditions in header ligaments, becomes practical when only those features essential to the crack initiation and propagation models are considered. There is no attempt to approximate the temperature and stress distributions throughout the entire ligament area. Specifically, the oxide notching model requires the time history of the local metal temperature at the interior location which experiences the most severe temperature history. The creep-fatigue initiation model similarly requires the time history of the local metal temperature and local stress/strain at only that location experiencing the most severe conditions. In both cases, the location of interest is on the surface of the bore hole either near or at the intersection of the bore hole and header interior surface.

The creep crack growth and fatigue crack growth models are designed to focus on the behavior of an entire ligament. The creep crack growth model provides the time history of the metal temperature and pressure stress, both averaged over the ligament surface that is defined by the

postulated crack growth path. Hence, only pressure-induced membrane forces on the ligament are considered in the calculation of the creep crack driving force. The fatigue crack growth model provides time history of the pressure-plus-thermal stress, again averaged over the ligament surface defined by the postulated crack growth path.

The transient ID thermal solution is obtained by the Finite Difference Method, which considers an insulated outer surface, steam temperature, and convection heat transfer coefficient on the interior surface. The convective heat transfer coefficient is based on standard heat transfer correlations for single-phase steam. Once the temperatures are obtained by the finite difference procedures, stresses are calculated. The pressure stresses are calculated using the Lame Solution for thick cylinders, and the elastic 1D thermal stresses are evaluated by numerical integration of the temperature field.

The simplified 1D temperature and elastic stress solutions for the idealized smooth cylinder are then modified to account for the specific geometric details of the numerous bore holes in the header body. The 1D temperature and stress solutions are modified by using closed-form empirical equations. These empirical relationships separately address the effects of the geometric discontinuities, the additional heat transfer surfaces of the bore holes, and the potential of the steam temperature in the bore holes to be significantly different than that in the main cavity of the header.

The time and cycle fractions crack initiation model requires an accurate estimate of the stress-time history at the local point of interest. To obtain more realistic damage estimates, the elastically calculated stress-time history is modified to reflect the inelastic deformation characteristics of the material prior to evaluating the creep-fatigue damage. Pure strain control is assumed as the basis for modifying the stress-time history to account for the effects of both plasticity and creep.

In the case of header seam welds away from ligaments, the 1D temperature and stress solutions are adequate without empirical modifications. In the case of header girth welds, stresses due to nozzle and support loads can be important and are not calculated by the BLESS code. In piping systems, the restraint of thermal expansion stresses generally dominate the failure of girth welds.

The BLESS code does not perform a piping analysis to determine the system stresses. Evaluation of restraint of thermal expansion and deadweight bending moments in piping must be made outside of the BLESS code.

BLESS Computer Code

EPRI has developed a PC-based integrated evaluation tool titled Boiler Life Evaluation and Simulation System (BLESS) computer code to address ligament cracking and damage mechanisms in headers and pipes. The complete BLESS code considers creep- and fatigue-induced crack initiation and growth in boiler headers and pipes. It also includes the effect of steamside oxidation on the initiation and growth of cracks. It contains material properties data for P11 steel (1-1/4Cr-1/2Mo) and P22 steel (2-1/4Cr-1Mo) in base metal and weldment regions. To account for the scatter in material property data and the uncertainty of other input parameters,

users can specify a probabilistic mode of analysis. In this case, BLESS uses a Monte Carlo-type simulation to obtain failure probabilities.

BLESS was originally released in 1992, and was developed in a multi-year effort by collaborators at GA Technologies, Babcock & Wilcox, and Failure Analysis Associates. The original code used a character-based interface and ran on MS-DOS systems. Since the original release in 1992, BLESS has been upgraded to run in Windows. The software has been divided into two parts, for example, headers and pipes. A module for leak-before-break (LBB) has also been provided. The current version of BLESS includes the following three modulus:

- Headers. BLESS-Headers 4.2
- Pipes. BLESS-Pipes 4.2
- Leak-before-break. BLESS-LBB 4.1

BLESS-Headers 4.2

BLESS-Headers 4.2 can perform either deterministic or probabilistic remaining life estimates for header ligaments and for girth and longitudinal welds in headers and pipes [107]. BLESS can analyze crack initiation due to creep/fatigue or oxide notching, and crack growth due to creep/fatigue. Default material properties are provided for commonly encountered pipe and header materials, including weld metal and heat-affected zone (HAZ). The default material properties include descriptions of the statistical distributions of the random variables, which are primarily material properties. In addition, BLESS allows the input of current inspection results for consideration in the remaining life analysis.

BLESS-Headers 4.2 requires the following data or contains the following choices of options:

- Units. Two choices—English or SI units—are available.
- Geometry and Nominal Operating Data. The following header dimensions are input on this dialog box:
  - Header OD and ID. The outside and inside diameters of the header.
  - Axial pitch: The centerline-to-centerline distance between tubes in the same tube row. This distance is measured in the axial direction of the header. It is assumed that the axial pitch is the same for each tube row.
  - Tube and ID. The outside and inside diameters of the tubes which penetrate the header. It is assumed that all tubes at the selected axial position are of the same diameter.
  - Bore hole ID. The bore hole diameter as determined at the interior surface of the header.
  - Other design information. Steam pressure, header steam temperature, tube steam temperature, header flow rate, and tube flow rate.

- Penetration Pattern. The tube penetrations may be either radial or nonradial. Reference angle is used to define the location of the penetration. Radial pitch is defined from the offset. Tube penetration depth into the header is also required.
- Operating History/Procedure. The BLESS life evaluation is performed based on selected operating histories or procedures. An operating history/procedure is the time histories of the temperatures, flow rates, and pressures. The collection of operational histories/procedures includes all of the various startups, shutdowns, transients, and periods of steady operation encountered or expected.
- Material Data. Materials provided in the BLESS-Headers 4.2 library include:
  - 1-1/4Cr-1/2Mo base and weld
  - 1-1/4Cr-1/2Mo HAZ
  - 2-1/4Cr-1Mo base and weld
  - 2-1/4Cr-1Mo HAZ
  - P91 base and weld
  - P91 HAZ

Custom materials and properties can be provided as inputs.

- Analysis Type. The analysis option for the header includes:
  - Deterministic/probabilistic. The selection includes a deterministic or probabilistic analysis.
  - Solution type. The selection of combinations of crack initiation and/or growth can be made.
    - Crack initiation addresses only the initiation phase. This solution option can estimate the time-to-crack initiation on the basis of both a time- and cycle-fractions model and an oxide-cracking model.
    - Crack initiation and growth analyzes crack initiation (time-cycle fractions and/or oxide cracking) followed by crack growth.
  - Ligament selection. Each analysis considers a single ligament. The displayed rupture time is based on steady operation at the normal operating conditions. The ligaments with the shortest rupture times are then the most susceptible to creep damage. Since thermal and cyclic stresses were not considered in the preliminary evaluation, the critical ligament determination is subject to the evaluation of more detailed operating conditions.
  - Crack growth direction. There are two possible crack growth directions**:**
    - ID to OD. A crack starting at the header ID, and extending between the two bore holes defining the ligament, grow toward the header OD.
    - Bore hole-to-bore hole. Two cracks, one starting at each of the bore holes defining the ligament, and extending from the header ID to the header OD, grow toward each other.

- Current Damage. Current damage inputs consist of three categories, independent of one another:
  - LMPage or time/temperature. Several of the properties of certain materials in BLESS are age-dependent (that is, the properties change during the component's life, depending on time and temperature). The LMPage parameter is used to specify the current state of the header material. LMPage is defined as:

    $$LMPage = T[10 + 1og_{10}(t_{age})]$$

    where T is in degrees Rankine and t_{age} is the service time in hours. The user can enter LMPage directly, or can enter the past time and temperature exposure of the header. LMPage accounts for time-temperature effects on material properties. It does not account for creep damage that can occur during the exposure. Such damage is stress dependent and is entered through the input damage.
  - Input damage. The current damage state of the header can be specified in one of two ways: fractional damage or damage index.
    - *Fractional damage* involves defining the current creep and fatigue damage states, which are evaluated by Robinson's and Miner's rules, respectively. The current depth of the oxide can also be defined. For deterministic analyses, point values are defined. For probabilistic analyses, the standard deviation is also defined. The damage states are then assumed to be normally distributed. The oxide depth is input in inches. It can be estimated from BLESS analyses or from some other source.
    - *Damage index* involves defining the creep damage class, which has five possible values: 1, A, B, C, and D. Creep is the only damage mechanism considered when using the damage index. The creep damages corresponding to the damage indices are summarized in Table A-5.

Table A-5
Damage Index

Damage Index	Damage Description	Range of Life Fraction
1	Undamaged	to 0.140
A	Isolated cavities	0.0465–0.484
B	Oriented cavities	0.288–0.540
C	Microcracks	0.298–0.842
D	Macrocracks	0.707–1.0

For deterministic analyses, the midpoint of the range for the selected damage index is used. For probabilistic analyses, the damage (life) fraction is assumed to be uniformly distributed in the range.

Using BLESS-Headers 4.2 as a Design Tool

BLESS-Headers 4.2 can be used as a tool to evaluate different design options including:

- Assess temperature and pressure variations impact on the header life.

- Evaluate different types of ligament arrangements and bore hole spacings (pitches) selection on the header life.
- Evaluate cycling operation impact on the header life.
- Assess the impact of tube and header temperature variations on the header life.
- Assess the effect of material and welding flaws on the header life, including the use of inspection tolerances as potential flaws.
- Evaluate the design life between the different tube materials and header thicknesses.

Through the BLESS-Headers 4.2 calculation, different design options can be evaluated and the optimized design can be selected. BLESS-Headers 4.2 calculations can also establish a prospective design life for high-temperature headers, which can be used for future life monitoring and management. Several examples are presented in the BLESS-Headers 4.2 manual, demonstrating the program usage for remaining life assessment. It can be altered to assess the new design options. One example is described in Section 6.

BLESS-Pipes 4.2

BLESS-Pipes 4.2 provides a tool for fracture mechanics analysis of crack growth in seam-welded piping and is tailored for use in conjunction with the EPRI guidelines [108]. In addition, the code can consider other crack configurations, for example, circumferential, and nonweldment cracks. BLESS-Pipes can consider subsurface cracks or surface-connected cracks, and is capable of treating the finite length of surface-connected cracks. BLESS-Pipes is currently unique in its capability of treating semi-elliptical surface cracks where the aspect ratio (ratio of crack length to depth) changes as the crack grows.

The fracture mechanics procedures are based on creep/fatigue and consider both primary and secondary creep. Cyclic operating conditions allow for cycling of pressure and/or temperature. Deterministic or probabilistic analyses can be performed. The probabilistic analysis uses Monte Carlo simulation. Material properties are provided for 2-1/4Cr-1Mo, l-1/4Cr-1/4Mo, HAZ, and weld metal. Default values of parameters describing the material-related random variables are also provided. The following random variables can be considered: crack depth, crack aspect ratio (for semi-elliptical cracks), stress-strain rate, and creep/fatigue crack growth relation. Plots and listings of results are obtained through the Windows feature, and input and output files are easily stored and accessed. Properties for additional materials are easily input and saved in a materials library.

BLESS-Pipes 4.2 requires the following data or contains the following choices of options:

- Units. Two choices—English or SI units—are available.
- Analysis. For deterministic analysis, BLESS-Pipes uses the median material properties by default. Options are provided to use higher or lower values of these properties in terms of plus or minus standard deviations. Provision has also been made for the user to input a multiplier on $C_{t,ave}$, the crack driving force for creep-fatigue crack growth. The use of a multiplier on C_t is suggested in some instances in the EPRI guidelines [109].

Probabilistic analyses can be performed with case Monte Carlo simulation. Such analyses provide the failure probability as a function of time. The Monte Carlo simulation can be performed by the conventional method, or importance sampling can be used. The conventional method is preferred, but can result in excessive computer run time if low failure probabilities are encountered. Importance sampling can provide results for lower failure probabilities for a given computer time.

- Geometry. If the crack location is buried (not surface-connected), then the uncracked ligament input is required. For semi-elliptical cracks, the location considered for the analysis is always ID connected, and the input for half-crack surface length is also required.

  If the probabilistic analysis is selected, the second parameter of the crack depth distribution is required. For semi-elliptical surface cracks, the second parameter of the aspect ratio is also required. An option is also available for the user to terminate the crack growth analysis when the crack size exceeds a user-specified limit. This limit is input as a fraction of the wall thickness.

- Operating Data. Either steady-state or cyclic operation can be performed. For steady-state operation, the required data include pressure, temperature, and additional axial stress.

  For cyclic operation, the operating conditions are considered to remain constant for a given duration, with instantaneous change to the next set of conditions. The required inputs are duration of the cycle, the pressure and temperature during the cycle, and additional axial stress. The axial stress is only used if the crack is circumferential. If the operating history consists of more than one condition, the cycles are applied to crack growth in the order in which they indicate. The operating history is repeated until failure occurs or the maximum evaluation time is exceeded.

  The crack growth calculations are based on the $C_{t,ave}$ parameter. The value of this parameter includes the time since initial loading. In simple operating histories that consist of only time at constant conditions with occasional unloadings, this time is the time since the last unloading. In more complex loading histories, such as can occur when conditions are changed between unloadings, this time is rezeroed when the pressure decreases below the maximum value since the last rezeroing, and the pressure increases with time.

- Material Data. This material is selected from material library. The user can modify the selected material properties or specify new material properties.

Using BLESS-Pipes 4.2 as a Design Tool

BLESS-Pipes 4.2 can be used as a tool to evaluate different design options including:

- Assess temperature and pressure variation impact on the pipe life.
- Evaluate cycling operation impact on the pipe life.

- Evaluate the impact of seam-welded pipe versus seamless pipe.
- Assess the effect of material and welding flaws on the header life, including the use of inspection tolerances as potential flaws.
- Evaluate the design life between the different tube materials and pipe thicknesses.

Through the BLESS-Pipes 4.2 calculation, different design options can be evaluated and the optimized design can be selected. BLESS-Pipes 4.2 calculation can also establish a prospective design life for high-temperature pipes, which can be used for future life monitoring and management. Several examples are presented in the BLESS-Pipes 4.2 manual, demonstrating the program usage for remaining life assessment. It can be altered to assess the new design options.

BLESS-LBB 4.1

BLESS-LBB 4.1 is a module of the BLESS software that performs LBB calculations [110]. The calculation of the critical length of a through-wall crack is based on the J-integral and tearing instability. Once the critical crack length is calculated, the comparison can be made. If a crack is smaller than this critical size at the time of breakthrough, the crack will not be unstable and a leak will occur. This is a leak-before-break situation. Conversely, if the crack at the time of breakthrough is longer than the critical size, then a break occurs without being preceded by a leak.

The calculation of the critical length of a through-wall crack is based on the J-integral and tearing instability. The crack growth resistance (J-da) curve is taken to be bilinear, with a change in slope at J_{Ic} and slope related to T_{mat} at larger values of J. The critical length calculated by BLESS-LBB is the smallest through-wall axial crack that meets the criteria:

$$J_{applied} > J_{Ic}$$

and

$$T_{applied} > T_{mat}$$

J_{Ic} and T_{mat} are material properties whose default values are included in BLESS for a variety of materials. The values are for typical operating temperatures of 1000°F (538°C). The user can also provide their own input values. The applied values of J and T are obtained from the fully-plastic J-solution for a through-wall axial crack in a pressurized pipe [111]. The conventional elastic-plastic value of J is evaluated.

Once the critical crack length is provided by BLESS-LBB, the user then compares the critical length with the length expected if the crack were to become a through-wall. This comparison tells the user whether a LBB situation is expected.

Four examples are presented in the BLESS-LBB 4.1 manual.

Dissimilar-Metal Welds

Background

Dissimilar-metal welds (DMWs) occur in fossil power station boilers where ferritic steel tubes are joined to austenitic steel tubes in the SH and RH sections [112]. The austenitic steel tubing is used in the highest-temperature stages of the SH/RH where increased resistance to creep and oxidation is needed. Economic considerations favor the use of low-alloy ferritic steel tubing in earlier SH/RH stages, where temperatures are lower. A DMW is formed between the ferritic steel tube and the austenitic steel tube using ferritic, austenitic, or inconel-type filler metal. DMWs have been found to be a weak link in these tubing systems. The low-alloy and stainless steels that are joined in a DMW differ markedly in their chemical, mechanical, and physical properties. Stainless steel has a coefficient of thermal expansion 30% greater than that of low-alloy steel. There are three distinct failure modes:

1. Failure occurring by the formation and propagation of cracking along prior austenite grain boundaries in the low-alloy steel about one or two grains away from the weld fusion line. This failure mode is commonly observed in DMW with stainless steel filler and may also be observed in nickel-based filler DMW. Intergranular crack segments, about a grain diameter in length, initially form at an angle to the weld metal/low-alloy steel interface before developing segments parallel to the weld interface and linking up to cause a through-wall separation approximately parallel to the interface.

2. Failure occurring by cavity nucleation, growth, and linkup along a planar array of globular carbides that develops in service along the weld fusion line. This failure mode is commonly observed in DMW with nickel-based filler metal. The existing evidence suggests that the final cavity growth and linkup stage is relatively rapid and constitutes the last stage in damage accumulation.

3. Failure occurring due to the propagation through the tube wall of the oxide notch formed on the outside of the tube at the weld/low-alloy steel junction. Oxide notches are commonly observed in DMWs after service. In many cases, the notches do not propagate. However, there are circumstances in which the notch can propagate to failure. Failure by this mechanism can occur in both stainless and nickel filler DMW independently of the damage of Modes 1 and 2 and is usually localized in the low-alloy steel HAZs.

These failure mechanisms are not mutually exclusive. In stainless filler weld failures, both oxide notching and prior austenite grain boundary cracking are often present. In nickel-filler weld failures, oxide notching, prior austenite grain boundary cracking, and interfacial cracking are often simultaneously present. Damage develops at elevated temperature service, particularly when temperatures are cycled during plant startup and shutdown. Even if a DMW is not subjected to any other loadings, this self-limiting stress damage can also occur. Primary system loads from dead weight and steam pressure and secondary system loads from constrained thermal expansion are additional loads applied continuously in service. Failure of these welds has been a trouble some problem for utilities.

EPRI sponsored a comprehensive DMW failure analysis and development project (RP1874). Completed in 1985, this study defined the causes of failure in DMWs, characterized the failure damage, and developed a method for predicting the remaining service life of these welds. The complete approach involves physical inspection, review of operating history, and analysis of system-imposed loading on DMWs. DMW damage is assessed through a variety of nondestructive examination (NDE) techniques supplemented by metallurgical examination of boat samples or full-size tube sections. EPRI has developed an empirically derived calculation procedure and computer code called Prediction Of Damage In Service (PODIS). Using service conditions as the primary input, PODIS provides an assessment of DMW damage and predicts the remaining life of DMWs for replacement decisions. This study has resulted in two sets of guidelines for improving DMW performance. One set covers locating and supporting DMWs to optimize service performance. DMWs can be positioned so that primary and secondary system loads, as well as DMW temperatures, stay within specific guidelines. The second set of guidelines identifies the best welding designs and procedures for optimal performance. Regarding the weld filler itself, testing shows nickel-based filler material can improve life by a factor of up to five compared to stainless steel fillers in DMWs. This is because the expansion coefficient of the nickel-based filler is closer to that of the low-alloy steel. Other welding-related improvements include:

- The weld angle can have a significant effect on DMW life. Hence, weld geometry should be improved to reduce stresses at the weld fusion-line interface.
- For inconel-filler welds, welding procedures should be modified so that they promote an innocuous carbide distribution in the weld's HAZ.
- Post-weld heat treatment should be controlled to avoid decarburization near the weld fusion line.

Operational changes, such as minimization of temperature excursions and cycling, can have a positive impact on DMW life.

PODIS: Prediction Damage In Service for Dissimilar Metal Welds

PODIS is the only software available to address DMW problems in the industry. The technique involves detailed assessment of loading histories to which the welds are subjected, along with the use of empirical quantitative relationships established from both laboratory and service data. PODIS has been developed for both austenitic stainless steel and nickel-based filler material DMWs.

It is emphasized that PODIS is applicable only in cases that meet the following criteria:

- Tubes with 0.5 in. (12.7 mm) <OD <3 in. (76.20 mm) and wall thickness in the range of 0.1 to 0.5 in. (2.54–12.7 mm)
- Welds joining 300-series stainless steel tube (304, 316, 321, 347H-Grade, etc.) to 2-1/4Cr-1Mo, 1-1/4Cr-1/2Mo, 1Cr-1/2Mo, or 5Cr-1Mo steel tube using filler metal of 300-series stainless steel (for example, 308, 309, 310) or nickel-based alloy (Inco 132, Inco 182, Inco A, Inco 82).
- Maximum operating temperature below 1250°F (677°C).

The loading to which a DMW is subjected can be divided into three categories. The first is associated with the self-limiting loads arising from the difference in thermal expansion at the DMW. The second is associated with the primary pressure and deadweight loads. The third is associated with the secondary thermal expansion loads arising from the surrounding structural system. The first type of loading results in a self-stress while the second and third loadings cause system stresses. The PODIS program calculates the self-limiting stress. The system stresses are imported to the PODIS.

The primary stress represents the total axial stress due to steam pressure inside the tube and the deadweight load from the tube bundle system. The axial stress due to pressure load is calculated from:

$$\sigma_P = P_i R_i^2/(R_o^2 - R_i^2) \qquad \textbf{Eq. A-15}$$

where

σ_P = axial stress due to pressure (ksi or MPa)

P_i = inside steam pressure (ksig or MPa)

R_i = inside radius of tube (in. or mm)

R_o = outside radius of tube (in. or mm)

The deadweight load is determined from a load analysis of the tube bundle system. The analysis is generally performed using any piping computer programs. The total primary stress is the sum of the axial stress due to pressure and dead weight.

The secondary stress is due to the restraint imposed by the supports on the free thermal expansion of the tube. An axial bending stress component at the weld is obtained from an overall elastic load analysis of the tube bundle system subject to thermal loading. The analysis is usually performed with a piping computer program and would include such parameters as temperature distribution within the tube assembly, support conditions, and material properties. The tube temperatures can be obtained from boiler manufacturers or calculated using techniques suggested in CS-4542, *Dissimilar-Weld Failure Analysis and Development, Volume 6: Weld Condition and*

Remaining Life Assessment Manual [112]. Geometric data, such as tube dimensions, tube spacing, support locations, and bend locations, are obtained from the design drawings. Materials property data, such as modulus of elasticity and coefficients of thermal expansion, can be taken from the ASME Code or other published sources. The boundary conditions used for the various supports are simplified representations of the actual support conditions in the boiler. Displacement and rotation degrees of freedom (that is, X, Y, Z, θ_X, θ_Y, θ_Z) are normally fixed, released, or spring elements. In lieu of computer piping analysis, hand calculations can also be performed for simple or bounding cases.

These separately calculated system stresses are used in PODIS to assess the overall damages. The program covers two types of failure mode:

- Mode 1 is cracking along prior austenitic grain boundaries in the ferritic steel close to the weld interface. It occurs in both stainless steel and nickel-based DMW.
- Mode 2 is cracking associated with a plane of carbides right at the ferritic steel/weld interface. This mode occurs only in nickel-based DMWs.

The three damage categories are D_I, D_P, and D_S.

1. The first category, D_I, corresponds to damage caused by local self-limiting thermal stresses induced by the coefficient of thermal expansion differences at the weld. The characteristics of D_I are:

- D_I is sensitive to temperature.
- D_I is sensitive to temperature cycling.
- $D_I = 0$ for nickel-based welds.
- D_{IF} is the fatigue component of D_I.
- D_{IC} is the creep component of D_I.
- Total damage $D_{ITOT} = D_{IF} + D_{IC}$.

2. The second category, D_P, corresponds to damage caused by pressure and dead weight. The characteristics of D_P are:

- D_P is sensitive to temperature and steady-state axial stress.
- D_P is not sensitive to load cycling.
- D_P contains only creep damage D_{PC}.
- Total damage $D_{PTOT} = D_{PC}$.

3. The third category, D_S, corresponds to damage caused by the externally induced loads with the tube assembly (usually bending loads) caused by displacement constraint. The characteristics of D_S are:

- D_S is sensitive to temperature and to loads applied to the weld by the tube assembly (system loads).

- D_S is sensitive to cycling tube loads induced by temperature cycling.
- D_{SF} is the fatigue component of D_S.
- D_{SC} is the creep component of D_S.
- Total damage $D_{STOT} = D_{SF} + D_{SC}$.

The total damage predicted for the DMW is given by:

$$D_{TOT} = D_{ITOT} + D_{PTOT} + D_{STOT} \quad \textbf{Eq. A-16}$$

The damage corresponding to Mode 1 is not added to that for Mode 2. They are treated separately. The values represent the level of each specific mode of damage anticipated to be present after defined loading history is experienced. The limiting value of D_{TOT} equals 1, which represents the failure.

PODIS Sample Case

Boiler X was in operation from June 1973 to May 1985. It is known to contain both stainless-steel and nickel-based DMWs (an unusual situation) in similar locations. During a recent inspection of the final SH, it was observed that some of the tube supports had failed. It was inferred from this that there could be excessive loads on some stainless steel and some nickel-based fusion dissimilar welds in the tube assemblies. Also, records showed that an inspection conducted in June 1982 did not reveal any failure of the tube supports. It was determined from the records that the operating steam pressure was 2400 psi (16,548 MPa). The OD and wall thickness of the tube were 2 and 0.4 in. (50.8 and 10.2 mm), respectively. A PODIS analysis is to be performed to estimate the damage in both the stainless-based and nickel-based DMW.

The average operating time in the past has been approximately 7000 h/yr. The resulting service life is as follows:

7000 h/yr x 12 yr = 84,000 h

It is assumed that the support condition changed just after the 1982 boiler inspection, hence, the 12-year period is split into two segments having 63,000 h and 21,000 h of the total operating life. A piping analysis is performed using a piping program to estimate the axial dead weight and secondary stresses. The results are as follows:

Before support failure:

Axial deadweight stress = 0.7 ksi (4.8 MPa)

Axial secondary stress = 5.0 ksi (34.5 MPa)

After support failure:

Axial deadweight stress = 3 ksi (20.7 MPa)

Axial secondary stress = 7 ksi (48.3 MPa)

From the steam pressure, the axial stress is calculated as follows

$$\text{Axial pressure stress} = \frac{(2400 \text{ psi}) \times (0.6 \text{ in.})^2}{(1.0 \text{ in.})^2 - (0.6 \text{ in.})^2} = 1.4 \text{ ksi (9.6 MPa)} \qquad \textbf{Eq. A-17}$$

The total primary stress is calculated by adding the deadweight stress and pressure stress together, resulting in:

Primary stress (Segment 1) = 0.7 + 1.4 = 2.1 ksi (14.4 MPa)
Primary stress (Segment 2) = 3.0 + l.4 = 4.4 ksi (30.3 MPa)

A representative temperature operating history for a three-month period was obtained from the plant records. Operating temperatures and shutdown/startup behavior can often be observed in strip chart recordings. Figure A-1 shows a possible one-day steam temperature recording of a plant which operates at various power levels. Two different mean temperatures are determined, 950 and 1000°F (510 and 538°C), each being approximately 12 h long. This outlet steam temperature is calculated to be 50°F (10°C) less than the mid-wall metal temperature at the DMW based on the film drop and inside scale thickness at the location of the weld. So two operating temperatures, 1000 and 1050°F (538 and 566°C), each occurring 50% of the time are assumed for both segments of the total service life. Cycling due to shutdowns can usually be correlated with outage duration as indicated in Figure A-2. If this shutdown was special (forced cooling versus natural convection) it should be noted and identified with its corresponding temperature decay behavior. The example shows a force cooled shutdown after 16 h resulted in a temperature change of 500°F (260°C). Using this information, a list of outages with their durations can be categorized into cold, warm and hot startups. The startups are directly correlated with the outage logbooks. The information on outages for the total service life was assumed as follows:

- Cold starts = 84 (startup below 200°F [93°C])
- Warm starts = 96 (startup between 200 and 800°F [93 and 429°C])
- Hot starts = 147 (startup between 800 and 900°F [429 and 482°C])

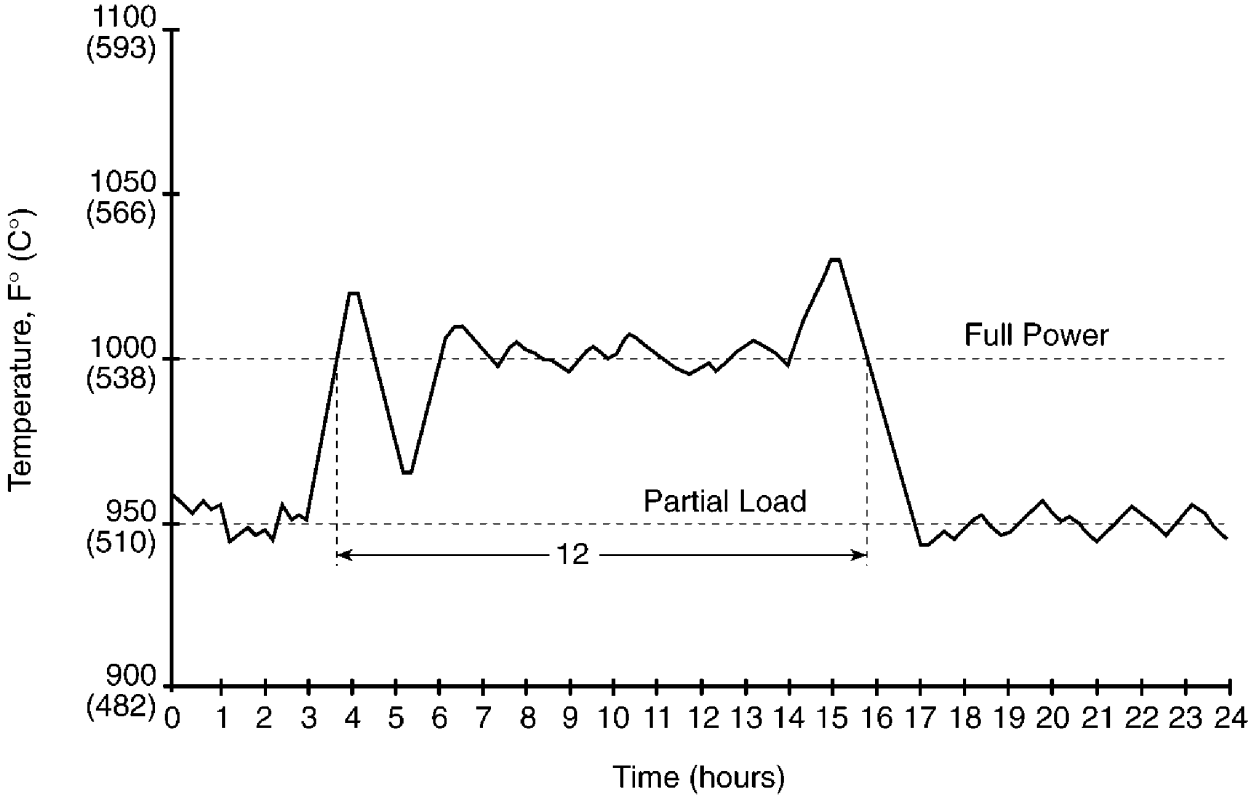

Figure A-1
Temperature-Time History Plot of Normal Operating Condition

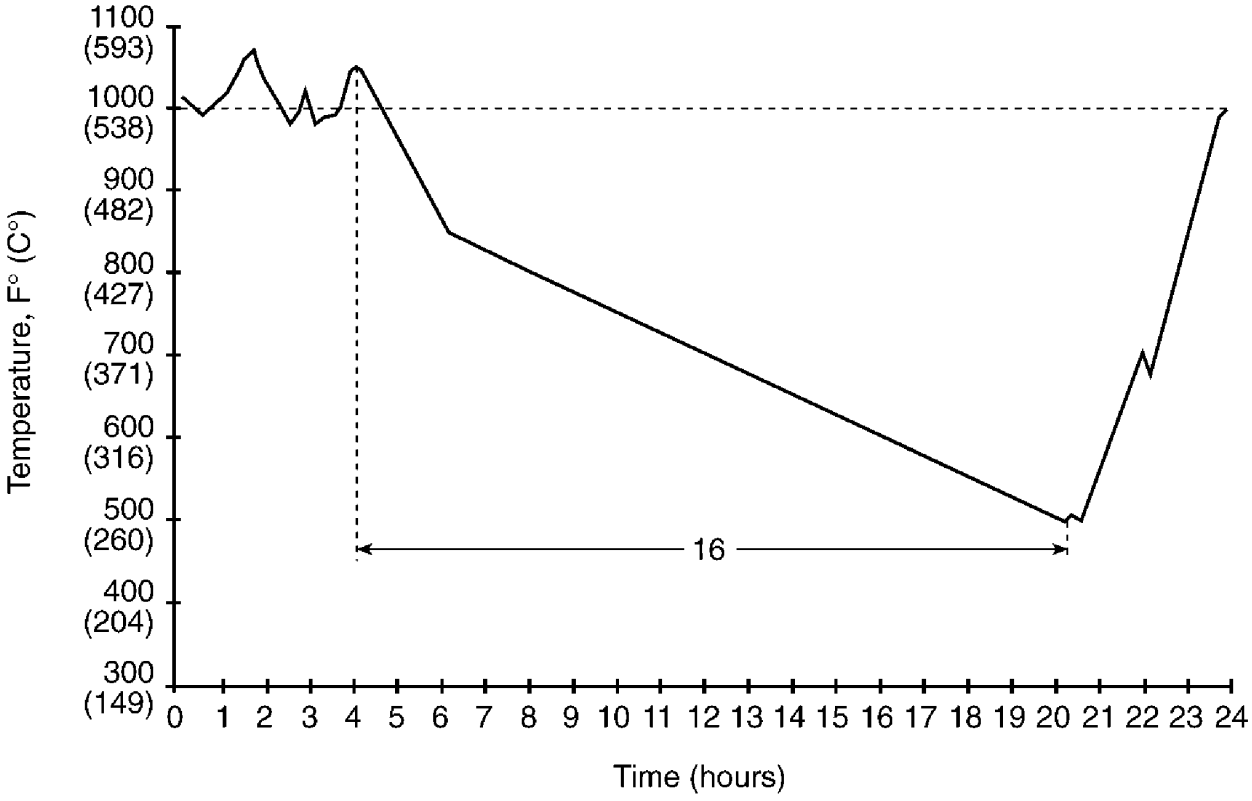

Figure A-2
Temperature-Time History Plot of Warm Start Condition

This specific case enables a comparison to be made between stainless-based and nickel-based DMWs as shown in Table A-6.

Table A-6
Input Data and Results for the Sample Problem

	Total Operating Life = 84,000 (h)		
	Mode 1	Mode 2	Total
Plant X - Life Segment			
Segment duration (h)	63,000	21,000	
Operating temperature I	1050	1050	
Temperature I duration (h)	31,000	10,500	
Operating temperature	1000	1000	
Temperature II duration (h)	31,500	10,500	
Number of cold starts	63	21	
Number of warm starts	73	24	
Number of hot starts	110	37	
Primary stress	2.1	4.4	
Secondary stress	5	7	
Estimated damage (stainless-steel)	0.11	0.13	0.24
Estimate damage (nickel) Mode 1	0.05	0.08	0.13
Estimate damage (nickel) Mode 3	0.04	0.11	0.15

The first calculations are for the stainless-based welds. The first segment is predicted to produce very little damage in the stainless-based DMWs. For the second segment, the rate of damage is increased due to the increase in primary stress resulting from support failure.

For the nickel-based DMWs, the first segment also produces little damage in either Mode 1 or Mode 2. After the support failure, both the primary and secondary stresses are increased. The damage rate is significantly increased, mainly due to the increase in primary stress, but also due to the increase in secondary stress. If this load increase had occurred earlier in the life of the nickel-based DMW (thus shortening the duration of Segment 1), the damage induced in a Segment 2 of the same length would have been less. In that case, less prior aging time (occurring during Segment 1) would have produced less damaging carbide growth.

The overall conclusion would probably be that, although the DMWs are predicted to have gained some damage during the high load period, repairs to restore the original support condition would reduce the damage rate to small levels and allow safe operation for both kinds of DMW for at least another 10 years.

Using PODIS as a Design Tool

PODIS can be used as a design tool to evaluate the new design options to maximize the service life, including the following:

- Select support locations to minimize the system stresses.
- Select DMW joint locations to minimize temperature effects.
- Assess differences between nickel-based filler materials versus stainless steel filler materials.
- Assess operation impact on the life of DMWs.
- Assess proposed cycling and temperature excursion effects on the life of DMWs.

The tube temperatures can be obtained from boiler manufacturers. Through the PODIS calculation, different design options can be evaluated and the optimized design can be selected. PODIS calculation can also establish a prospective design life for DMWs, which can be used for future life monitoring and management. The PODIS software was developed more than 15 years ago and the Windows version is under extensive updating.

B
DEVELOPMENT OF TECHNICAL SPECIFICATION FOR PROCUREMENT

Introduction

When the boiler pressure components require replacement, utility companies normally solicit the expertise of the boiler manufacturers/fabricators for the redesign and/or fabrication. The project can be in-kind replacement, material upgrade, or design enhancement. Typically, utility companies issue a Request for Proposal to prospective vendors for bidding. For a negotiated contract, it is still a good practice to issue such a request. The Request for Proposal should clearly define the project and technical requirements. The project requirements contain scope of work, schedule, interfaces, documentation submittal, and commercial terms. The technical specification can be a functional specification, a detailed technical specification, or a hybrid specification. The functional specification approach specifies the performance requirements and is typically used in the new plant boiler procurement. A detailed technical specification approach provides most of the engineering and/or fabrication details and can be used in the in-kind replacement or material upgrades. A hybrid approach can be used in the design enhancement project. The hybrid approach provides information and data on problem areas, failure and root cause analysis results, and other more stringent design and fabrication requirements based on the lessons learned, and requests a technical proposal from vendors to resolve the identified problems. The contractor can take exceptions to or propose alternatives to any of the requirements of the technical specification. The utility company then evaluates the proposal and awards the contract based on the technical merits with economical considerations.

The American Society of Mechanical Engineers (ASME) Power Boiler and Pressure Vessel Code, Section I governs the design and fabrication of the boiler pressure components. The fabricator's shop practices reflect their valuable knowledge and experience. The technical specification prepared by the utility company should only specify the additional requirements beyond the Code, which provides lessons learned from the utility company's operational experience and specific requirements for their particular conditions. In order to avoid confusion, these additional requirements should be very specific. If conflicts occur, the technical specification should govern. This appendix focuses on procurement, fabrication, and their interfaces with design and installation. The information provided in this appendix is intended for reference only. This appendix describes lessons learned in general terms, and adoption or extraction of the requirements in this appendix specification should be tailored to each individual utility company's needs. Any additional requirements superimposed by the utility company can have cost impacts on the final products. It is important to ensure added reliability obtained from these additional requirements can be justified in economic terms. This appendix describes the following subjects related to the procurement and fabrication of the boiler pressure components:

- Codes and standards
- Contract administration
- Materials
- General fabrication requirements
- Tube bending
- Welding
- Nondestructive examination
- Hydrostatic testing
- Dimensional inspection
- Packaging and shipping
- Data and sample requirements
- Drawings
- Quality control
- Contractor submittals
- Source inspection
- Constructability

Codes and Standards

The codes and standards related to the design and fabrication of the boiler pressure include:

- ASME Boiler and Pressure Vessel Code, Section I, Power Boilers, edition/addenda in effect at the time of contract issuance
- ASME Boiler and Pressure Vessel Code, Section H, Material Specifications, Parts A and C, edition/addenda in effect at the time of contract issuance
- ASME Boiler and Pressure Vessel Code, Section IX, Welding and Brazing Qualifications, edition/addenda in effect at the time of qualification
- ASME Boiler and Pressure Vessel Code, Section V, Nondestructive Examination, edition/addenda in effect at the time of contract issuance
- American National Standards Institute (ANSI) B31.1, Power Piping, edition/addenda in effect at the time of contract issuance

Some descriptions of ASME Boiler and Pressure Code, Section I are provided in this section.

ASME Boiler and Pressure Code, Section I

General

The ASME Boiler and Pressure Vessel Code, Section I governs the design and fabrication of the boiler pressure components [69]. Materials permitted are listed by reference to other sections of ASME Code, American Society for Testing and Materials (ASTM), or ANSI specifications. The ASME Code provides general rules and minimum requirements for the design fabrication and construction of boilers to ensure safety. The Code considers safety uppermost and allows the individual talent to be exercised in a rational manner. It is normal practice for manufacturers to incorporate the Code requirements into their company standards such as design manuals, standard drawings, manufacturing procedures, and shop practices. These standards also include the manufacturers' own experience and in many instances may exceed the Code requirements.

Effective Code Issue

Each year, addenda to the ASME Boiler and Pressure Vessel Code are issued at six-month intervals. Every three years, a new Code is issued, and it includes all mandatory addenda to the previous issue. Code addenda can be used as soon as they are issued but become mandatory six months after issue. With constantly changing Code requirements, a boiler manufacturer can find it difficult to maintain consistent control for fabrication procedures. For some manufacturers, it has been the general practice in most cases to immediately adopt the latest Code revisions. Since the Code is a minimum requirement and most Code revisions are in the direction of being more restrictive, this is generally an acceptably safe procedure for manufacturers to take with projects contracted to earlier editions. Surveillance must be maintained, however, for changes that are in the category of being less restrictive for projects contracted to a prior Code edition.

Organization of the Written Code

The paragraphs of Section I are all prefixed with the first letter P which comes from the title word Power. Ironically the paragraph designations in Section VIII are prefixed with the first letter U for the word "unfired," which is a carryover from when that section was titled, "Unfired Pressure Vessels." The full paragraph designations include the Code part letter abbreviation. For instance, PG: General; PW: Welding; PR: Riveting; PWT: Water Tube; PFT: Fire Tube; PFH: Feedwater Heaters; PMB: Miniature Boilers; PEB: Electric Boilers; and PVG: Organic Vapor Generators.

The general requirements (PG) apply across the board to all Section I boilers. The PW and PR parts apply only when welding or riveting is used in fabrication. The other parts apply specifically to the type of boiler. Each of these Code parts is further subdivided into various sections and the paragraphs are numbered consecutively.

Materials

The ASME Code treats materials in a consistent manner in all sections. Materials used in Code construction are produced and supplied in accordance with specifications that have been developed by a national voluntary consensus standards system and approved for use by Code writing bodies. All material specifications are originally developed by the ASTM. When these specifications are considered suitable for Code construction, they are included in Section II of the ASME Code. The prefix "S" is then added to the ASTM identification number (ASTM A-210, for example, becomes ASME SA-210). This helps to identify materials that are approved for ASME construction.

The safety hazard imposed by chloride stress corrosion of austenitic materials in boilers is a serious consideration. Section I does not permit austenitic materials in water-wetted pressure parts of the boiler. They are permitted in the pressure parts handling steam such as superheaters or reheaters since stress corrosion is not a factor in these areas.

Once boiler materials are ordered, a system must be provided to ensure that the material received is properly identified and has the required documentation. This type of system is required by the A-150 paragraphs of the Code and must be approved and monitored by the responsible authorized inspector.

Hydrostatic Testing

Section I requires a hydrostatic pressure test before the boiler can be stamped with the Code symbol signifying inspection acceptance. Final inspection of the pressure retaining parts are required following the pressure tests but at a reduced pressure.

There have been several instances where hydrotesting was done at temperatures below the critical transition level where satisfactory pressure part material ductility did not exist. This has resulted in catastrophic brittle fracture failures in heavy wall pressure parts during the hydrotest. It is now a requirement that the tests be conducted with water at not less than 70°F (21°C).

Welding

Welding procedures must be qualified in accordance with Section IX of the Code, but the rules for welding boilers and component parts are presented in the PW part of Section I.

A manufacturer must prepare and qualify a welding procedure specification (WPS) before it can be used for Code fabrication. To qualify a WPS, the manufacturer uses a welder to perform the weldment exactly as described in the WPS, then the weldment coupons are subjected to tensile and bend tests in order to prove that the procedure will produce a weld having the properties required for its intended application. These test results are then filed with a procedure qualification record (PQR). Additional welders might be qualified by performance qualification tests, which are also subjected to bend tests. Section I references Section V for nondestructive

examination (NDE) requirements. The manufacturer must qualify the employees who perform these examinations to the Society for Non-Destructive Testings Standard SNT-TC-1A.

The PW part contains most of the dimensional welding rules and diagrams showing some acceptable types of welded construction. Mandatory postweld heat treatment requirements are listed for base metals identified by a P number classification listing in QW-422 of Section IX. Preheating is not mandatory, but a general guide for preheating is in the nonmandatory appendix Section A-100. Preheating is required only when necessary to obtain an acceptable qualified welding procedure.

Quality Control

The Code requires the manufacturer to establish a quality control system and to prepare a quality control manual that describes this system, which must be acceptable to the designated authorized inspection agency. The A-302 paragraphs in the Appendix of the Code represent a set of guidelines that can be used to define an acceptable quality control system.

Manufacturer's Data Reports

After a boiler has passed the hydrostatic test and inspection, the manufacturer must obtain the signature of a third party authorized inspector (AI) on a completed standard form known as a Manufacturer's Data Report. Facsimiles of these forms, with guideline instructions for completing them, are shown in the appendix of the Codes. Examples showing the use of these forms are included with the guideline instructions. The manufacturer is responsible for completing the appropriate form by filling in the critical dimensions, materials, and functional parameters necessary for the inspector's review. The ASME Manufacturer's Data Report is signed by the manufacturer's designated representative and the AI. It is a legal document admissible in federal, state, and provincial courts as defined by most states of the United States and all provinces of Canada.

Contract Administration

The material procurement and fabrication are parts of an important reliability process. Various stages of component fabrication must be incorporated into the overall project processes to ensure proper interface with other activities and maintain direct communications among many responsible parties, that is, the owner, material suppliers, fabricators, inspectors, installation constructor, and outage management team. There are many influential processes and factors related to quality, that is, planning, scope development, design, material selection, manufacturing techniques, implementation methods, and scheduling. The quality of products can only be achieved through the integration of these processes from all involved parties. After the contract award, all parties should work as a team to ensure the success of the project.

The utility companies typically provide the project requirements in the procurement or technical specification. The utility company and the manufacturer normally assign project managers as an official single communication and correspondence point. The project managers may delegate the

duties to their in-house engineers and inspectors for the actual execution of the project. However, the overall responsibilities reside with the project managers.

The roles of project manager from the utility company typically include:

- Represent the utility company to interpret and enforce the project and technical requirements of the specifications.
- Coordinate the review and approval activities in fabrication/inspection procedures, design and shop drawings, nonconformance reports, technical changes, and others.
- Serve as a single contact point for all written correspondence.

The roles of project manager from the manufacturing company normally include:

- Represent the fabrication company to interpret and fulfill the project and technical requirements of the specifications.
- Coordinate the engineering and fabrication activities within the manufacturing company, that is, scheduling, shop activities, drawing and procedure submittal, resolving comments from the utility company, and others.
- Serve as a single contact point for all written correspondence.

Some utility companies impose strong control over the entire project processes, and some simply rely on the manufacturer's control practices. Some utility companies only control the critical components and processes. The style of project control and management is the preference of the utility company. It is not necessarily a good practice to overlook the talent and experience of the contractor. However, the trust should be built on the mutual understanding of the project and quality requirements. Inspecting quality into the product is no longer an option. In the past, detailed inspection could be a standard approach by which quality was assured. In today's environment, the utility company should not simply impose strong project control and rely on detailed inspection to discover defects, which could result in rework, increased cost, and delays in material delivery. The ideal situation is for the utility companies to work with the contractor to establish high-quality fabrication standards and processes and to identify and control the critical manufacturing processes to prevent detects from occurring at the first place. Changing the concept of deficient acceptable rates to zero defects prevents defects from occurring rather than using statistical sampling to determine the quality. Defects impose threats to the inherent product reliability. It is a requirement that any deficiency is not acceptable.

Quality Assurance and Quality Control for Fabrication

The manufacturer shall have a quality assurance (QA) program which meets the requirements of ASME Section I, Appendix A-300. The program shall consist of a written QA and quality control manual, which documents QA and quality control processes and requirements, and manufacturing practices applicable to all work associated with the detailed design, procurement, subcontracting, fabrication, and inspection of the boiler pressure components. The scope of the QA program shall address the following:

- Program and organization
- Instructions, procedures, shop practices, and drawings
- Procurement and control of purchased material, equipment, and services
- Identification and control of materials, parts, and components
- Design and drawing control
- Control of all shop welding/practices
- Control of measurement and test equipment
- Control of repairs
- NDE testing
- Inspection
- Control of nonconformances and corrective action
- Documentation control and record management
- Handling, storage, and shipping
- Audits

The manufacturer shall have a QA organization that is responsible for developing the overall QA plan, auditing, and ensuring that weaknesses and deficiencies are identified and corrected. The QA organization should report directly to the top management in the facility. Writing the manual and the procedures is only part of the program. The critical point is the implementation of the program. Each project has its unique requirements. Therefore, QA and quality control requirements must be tailored to fit the particular project needs. The written quality control manual shall be available for review by the utility company during the proposal evaluation stage and at all times during execution of the contract.

Some of the general requirements that shall be covered in the QA program include the following, (more specific requirements are described in later sections of this appendix):

- All manufacturers shall possess a valid ASME Certificate of Authorization for manufacturing the boiler pressure components. The manufacturer's capabilities and facilities shall have been preapproved by the utility company, which can include prior approval of any subcontractors.

- The QA program shall clearly establish the authority and duties of persons responsible for execution of the program. These persons must possess sufficient responsibility and authority to enforce QA requirements, to identify problems, to recommend solutions to the problems, to verify the effectiveness of those solutions, and to ensure that all the pertinent requirements are satisfied.
- After the contract award and prior to the start of fabrication, the manufacturers shall have a preproduction review of the contractual documents and their QA program with the utility company to demonstrate their understanding of the requirements and to present their methods of complying with requirements.
- All of the requirements of the technical specification shall apply to the manufacturer and any subcontractors. The manufacturer shall assume full responsibility for the subcontractors' performance and the subcontractors' compliance to all aspects of the requirements. The utility company shall have the right to perform inspections of the equipment fabricated and work performed by the manufacturer and their subcontractors. The utility company may utilize a third-party consultant to perform inspections in the manufacturer's or subcontractor's facilities.
- The manufacturer shall maintain a record system that provides for the identification and correlation of test and inspection records and certificates. All NDE records shall be traceable throughout the fabrication process. The records shall include certification of pressure parts structural materials and weld metal. The manufacturer shall be responsible for inspecting the items and checking the applicable records, prior to shipment, for verification of compliance with all specification requirements. Activities requiring inspection will be signed by the manufacturer's inspector upon satisfactory completion.
- Any departure from the project requirements shall be considered a nonconformance. Non-conformance shall be documented and resolved in accordance with the QA manual, which includes identification, reporting, disposition, and technical justification for the disposition. The utility company or its representative shall have free access to review all nonconformance records.
- The contractor shall submit a detailed project schedule and manufacturing and inspection (M&I) plan to the utility company for review prior to the scheduled fabrication start date. The manufacturer shall provide a fabrication status report periodically (for example, biweekly), and the manufacturer shall inform the utility company any time when work will be delayed beyond the time as established in the schedule.
- The manufacturer and the utility company shall jointly establish witness points for the fabrication processes. These are predetermined points during the fabrication when the manufacturer's activities may be inspected or witnessed for compliance to the contract. The following points will most likely be included:
  - Shop inspection of critical processes
  - NDE of selected critical components
  - Hydrotesting
  - Authorization for shipment

The manufacturer shall notify the utility company in advance of the scheduled time of these witness events. The utility company's representative will either witness the event or authorize the manufacturer to proceed without witnessing.

- If the manufacturer's work is contrary to the contract requirements as determined by the utility company, the utility company shall verbally notify the manufacturer and confirm in writing the unacceptable conditions found. The main concern is that continuous operation under these conditions could cause damage, preclude further inspection, or render remedial action ineffective. If after the notification, the manufacturer does not take corrective action to the utility company's satisfaction, a written stop work directive (SWD) on the specified activity should be issued by the utility company. After the receipt of an SWD from the utility company, the manufacturer shall immediately stop operations or shipments of the materials to the extent stipulated in the SWD. Correction of the deficiency will be required prior to the utility company's written authorization for resumption of operations. An SWD shall not be considered as eliminating the manufacturer's obligation to meet schedules.

Tube Materials

Tube Manufacturing

A large amount of tubes of different size, shape, and material are required for a typical replacement project [113]. There are two general types of boiler tubes: seamless and welded. Normally, only seamless tubes are used in the boiler pressure components for the utility industry. The boiler manufacturer typically purchases the tubes from the tube manufacturers, which are normally referred to as tube mills.

Seamless Tubes

Seamless tubes, defined as tubes without any weld or seam, are made by piercing from solid rounds of steels. The production of seamless tubes requires special tools, careful control of heating, and exactness in procedure. The seamless tube manufacturing process begins with raw materials in the form of cylindrical billets supplied by numerous domestic and foreign steel producers. The billets are heated in a gas-fired furnace to the working temperature. The hot steel billet is rotary pierced, producing a hole through the center of the billet. The resulting hot hollow is further cold-worked using various machinery, depending on the producing mill, to further reduce the diameter and wall thickness.

At the hot finishing temperature, which is above the upper critical temperature, the tubing produced from low-carbon steel transforms to pearlite and ferrite upon cooling. Alloy tubing, such as the chromium grades, transform into various microstructural constituents depending on tube size and the cooling rate after the final hot working operation. These alloys require further heat treatment to achieve the required physical properties. Hot-finished tubes may exhibit a decarburized layer on their internal and external surfaces.

Tubing can also be produced as cold drawn from a hot tube hollow. This operation does not affect the transformation constituents produced by either hot working or annealing. Cold-drawing does, however, result in grain deformation because of the tube size change in both outside diameter and wall thickness as a result of cold working. Cold-drawn tubing for boiler applications is always heat treated after the final cold-drawing operation with a subcritical anneal, full anneal, or a normalizing treatment. The same heat treatment requirements are specified in ASME SA-213 for all low-alloy steel tubes whether cold drawn or hot worked. The subcritical anneal involves heating the tubing to temperatures such that only the cold-worked ferrite grains are recrystallized into strain-free equiaxed ferrite grains. The pearlite regions may spheroidize somewhat during a subcritical anneal but will remain banded and elongated. A final straightening operation may be performed after heat treatment. At some point prior to shipment, the tubes are frequently pickled, rinsed, and treated to inhibit rust.

Tubes for boiler application are furnished either hot finished or cold drawn. The major difference is mainly in surface finish and the permissible tolerance in dimensions. The tolerances on minimum wall thickness is generally -0% to +28% for hot-finished tubes, slightly less stringent than the tolerance of -0% to +22% for cold-drawn tubes. To obtain a smooth finish and tight tolerances, austenitic stainless steel tubing is generally finished only by cold drawing. The cold-drawing process also permits control of grain size in the final heat treatment, which is important in high-temperature applications of austenitic stainless steels.

Tightly toleranced hot-finished tubing is also available. Since 1984, foreign mills have offered hot-finished tubes at or near the tolerance of cold-finished tubes. This was the result of improvements in tube mill machinery and tooling tolerances and materials. This improved hot-finished tubing is sometimes referred to as "super" hot-finished tubing. A comparison of the three types of tubing is presented in Table B-1 [66].

Table B-1
Comparison of Cold-Draw, Hot-Finished, and "Super" Hot-Finished Tubing

	Cold-Draw	Hot-Finished	"Super" Hot-Finished
Process description	Hot-piercing of cast round billet rotating between rotating OD rollers. Material is then cold-drawn through ID and OD mandrels to achieve dimensions.	Hot-piercing of cast round billet rotating between rotating OD rollers. Similar process is repeated until dimensions are achieved.	Hot-piercing of cast round billet rotating between rotating OD rollers. Similar process is repeated until dimensions are achieved. Refinements in processes and tooling have yielded better tolerances.
Dimensional Tolerances	For 1-3/4-in. (44.45-mm) diameter tube: OD tolerance = +/-0.008 in. (+/-0.203 mm) MW tolerance = -0/+22%	For 1-3/4-in. (44.45-mm) tube: OD tolerance = -0.032/+0.016 in. (-0.813/+0.406 mm) MW tolerance = -0/+28%	For 1-3/4-in. (44.45-mm) tube: OD tolerance = +/-0.016 in. (+/-0.406 mm) MW tolerance = -0/+22%
ID finish	Smooth ID finishes fairly consistent. Linear indications from piercing operation are not visible. (However, these linear indications may actually exist.)	Inconsistent ID finish.	Inconsistent ID finish. It can be smooth. Some fabricators require 5%. Linear indicators from piercing operation will be visible.

Traditionally, cold-finished tubes are preferred for boiler pressure components by many fabricators and utility companies for several reasons:

- Quality. Superior surface finishing and dimensional tolerances—for example, cross-section concentricity, tube outside diameter, and wall thickness—help make bending, automatic welding, machining, fitup, final panel dimensional control, and field installation less difficult and more reliable.
- Properties. Greater mechanical properties—for example, yield strength, ultimate tensile strength, and hardness—can be achieved.
- Product availability. Nonstandard sizes and shapes—for example, tubes with thinner walls, smaller diameters, and longer lengths—are widely available and can be made quickly in comparison with hot-rolled products.

The hot-finished and "super" hot-finished tubing offers an economical incentive. The selection among the three types of tube finishing is at the discretion of utility companies based on their specific requirements.

Electric-Resistance Welded Tubes

Depending on design requirements, tubing can also be fabricated by electric-resistance welding of strip steel. A normalizing heat treatment is required for electric-resistance welded (ERW) tubes in order to relieve stresses and homogenize weld heat-affected zones (HAZs). ERW steel tubing is made by forming a flat strip into a tubular shape and welding the edges together in an electric-resistance welding machine.

ERW carbon-steel tubing, rather than seamless tubing, is widely used in stationary and marine boilers. It offers smoother surfaces, more uniform wall thickness, and less eccentricity. Because of softness and uniformity, welded tubes are easily installed. ERW tubing is commonly produced in sizes from 3/4–4-1/2-in. (19.05–114.30 mm) diameter and to minimum wall thicknesses from 0.028–0.220 in. (0.711–5.588 mm).

Quality and Metallurgical Control of Tube Materials

Boiler pressure tubing, either seamless or welded, is carefully inspected to verify that the material is of the desired quality. Ultrasonic thickness measurements and eddy current testing are typically used to measure tube dimensions and to detect internal flaws. These techniques have been adapted to enable automated, continuous on-line monitoring of tubing as it passes through the mill. Recommended practices are set forth in ASTM Standards E 213, “Practice for Ultrasonic Inspection of Metal Pipe and Tubing,” and E 309, “Recommended Practice for Eddy Current Examination of Steel Tubular Products Using Magnetic Saturation.” Neither standard specifies acceptance criteria, leaving the specific flaw dimensions and orientation up to the material purchaser. A machined notch with a depth 12.5% of the nominal wall thickness is commonly used as the acceptance criteria for both ultrasonic and eddy current testing. If a lesser notch depth is preferred, the utility company must specify it in the technical specification. Documentation should be provided that indicates the calibration standard (notch) used for the inspection of the tubes.

Boiler tube material shall be inspected both internally and externally for indications prior to fabrication. Tubes shall be free of mandrel marks. Welding repair of base materials should not be permitted. The utility company may consider rejecting the tube material based on the nature of the indication. Materials shall at all times be kept clean and protected from the weather and shall be free from scale, rust, and pits. Any material found unfit for service shall be rejected. The utility company may also want to know the source of supply and the country or origin.

All pressure tubes are subjected to either a hydrostatic pressure test or a nondestructive test of their entire length and periphery. Table B-2 lists the QA methods typically used in order to meet appropriate tube specifications and ensure desired properties.

Table B-2
Quality Assurance During Tube Manufacture

Property	Quality Assurance Methods
Chemistry specification	Spectrochemical analysis Stencil finished tube with specifications, heat number, and manufacturer
Mechanical properties	Proper control of heat treating practice (temperature, time) Tensile testing, flattening/flare test, hydrostatic testing Hardness testing
Tube dimensions	Ultrasonic wall thickness* Mechanical dimensional measurements
Free of material defects (seams, cold shuts, laps, inclusions, laminations)	Ultrasonic testing* Eddy current* Visual
Free of welding defects (incomplete penetration, lack of fusion, cracking)	Ultrasonic testing* Eddy current* Visual

* Continuous on-line monitoring is possible during fabrication of straight sections.

General Fabrication Requirements

Tube Bending

The primary objective of tube bending is to produce a desired shape [113]. Tube bending is a forming process that produces the permanent plastic deformation of the tube material by applying mechanical forces through tooling in either cold or hot conditions. ASME Boiler and Pressure Vessel (B&PV) Code, Section I, does not specifically address tube bends. All tubing approved for ASME B&PV construction is bendable. There are several interrelated tube-forming factors:

- The utility company or manufacturer's bending quality requirements
- The tube material and its mechanical properties, for example, ductility
- The desired bend radius
- The tube OD and wall thickness

Bends are made using a variety of hot- or cold-guided bend processes. The bending process produces thinning of the wall at the outside (extrados) of the bend and thickening of the wall at the inside (intrados) of the bend. A simple acceptable method to estimate the wall thickness in a tube bend is to compare the equations for hoop stress in a torus with that in a cylinder. For example, in a thin-walled torus, the hoop stress is:

$$\sigma_{\text{Hoop, Torus, Extrados}} = \frac{P \times OD}{2 \times t_{\text{intrados}}} \frac{R_B/OD + 0.25}{R_B/OD + 0.5} \qquad \textbf{Eq. B-1}$$

$$\sigma_{\text{Hoop, Torus, Intrados}} = \frac{P \times OD}{2 \times t_{\text{extrados}}} \frac{R_B/OD - 0.25}{R_B/OD - 0.5} \qquad \textbf{Eq. B-2}$$

where

P = pressure

OD = tube outside diameter

t_{intrados}, t_{extrados} = wall thickness

R_B = bend radius (measured to the tube centerline)

A study of these equations indicates that the hoop stress at a bend intrados is higher than the hoop stress away from the bend. The hoop stress at the extrados of the bend, is, however, somewhat less than the hoop stress away from the bend. To prevent the tube from rupturing at a bend, an evaluation shall be made to determine if the thickness in the vicinity of the tube bend was sufficient. This can be done by determining the wall thickness at the bend intrados and extrados that would produce the same hoop stress as the tube away from the bend.

Another important factor in the tube bending is the strain criterion, which is a major consideration in fatigue damage. The strain limits, that is, 2% plastic strain, should be considered as one limiting factor to establish the bending radius. Tube-bending criteria may be inherited from each fabricator's past experience. It is extremely important to review these criteria and evaluate its applicability when dealing with new material with no previous experience. Using old-bending criteria applied to the new less ductile material has created painful failure lessons in the past.

Other commonly used general tube bending requirements in the industry include:

- The wall thickness at any point in a completed bend shall be not less than 90% of the design minimum wall thickness as determined by calculation in accordance with ASME Code, Section I or evaluated based on torus formulas as described previously.
- Out-of-roundness, or ovality, of tubing after bending measured on the tube OD shall not exceed 10% as determined by the formula:

$$\text{Ovality} = 100 \times (D_{max} - D_{min}) / D_o$$

where

D_o = nominal tube OD (in. or mm)

D_{min} = minimum OD after bending or forming (in. or mm)

D_{max} = maximum OD after bending or forming (in. or mm)

- The manufacturer shall write tube-bending procedures and submit them to the utility company for review and acceptance. The initial bent tubes shall be checked on a full-scale layout. The bending process shall be adjusted after each bend until acceptable accuracy is being produced without subsequent pointing.
- Bending of tubes shall not cause buckling or undue stretching of the tube wall. When bending results in wrinkling or flattening, the tube shall be rejected and replaced.

Specific Requirements for Low-Alloy Steel

Some specific requirements for low-alloy steel material include the following:

- Tubing may be hot- or cold-bent in accordance with requirements specified herein. Cold-bending shall be performed at a temperature 100°F (38°C) below T_{crit}, where T_{crit} is the lower critical temperature of the material. Hot bending shall be performed and completed at temperatures between 1650 and 2100°F (899 and 1149°C).
- Low-alloy steel tubing with nominal chromium content greater than 2.25% shall be hot-bent only.
- After hot-bending, carbon steel tubing may be forced cooled in air as necessary to maintain required mechanical properties.
- After hot-bending, low-alloy steel tubing shall be cooled in still air. Forced cooling is not permitted.

Specific Requirements for Austenitic Stainless Steel

Some specific requirements for austenitic stainless steel tubes include the following:

- In no case shall hot-bending be performed at temperatures below 1400°F (760°C). Those portions of tube to be hot-bent shall be heated to a temperature not to exceed 2100°F (1149°C).
- Tubing shall be solution heat treated after bending (hot or cold) if the bend radius was less than 2.5 times the tube OD.
- Solution heat treating shall consist of heating to a temperature between 1900°F and 2050°F (holding for 1 h/in. [1 h/25.4 mm] of tube wall thickness) immediately followed by rapid

cooling. Cooling shall be by water quench, or other means such that the material is cooled from 1600°F (871°C) down to 800°F (427°C) in 3 min.

Quality Assurance in Bending and Panel Fabrication

The QA methods used during bending and panel fabrication are listed in Table B-3. Visual inspection, ultrasonic wall thickness testing, particularly in bends, and hardness testing are common techniques. The dimensional accuracy of finished tubes can be checked before they are assembled into panels using full-scale templates. Finished panels are hydrostatic tested at pressures well above operating conditions.

Table B-3
Quality Assurance During Bending and Panel Fabrication

Property	Quality Assurance Methods
Mechanical properties	Proper control of heat treating practice (temperature, time) Hardness testing Hydrostatic testing
Tube dimensions	Ultrasonic wall thickness of bends Mechanical dimensional measurements Tube layout using fill scale templates
Free of welding defects (incomplete penetration, lack of fusion, cracking)	Ultrasonic testing Visual Radiography

Welding

Welding Procedures

Welding is used in the manufacture of almost every component produced. Welding procedures shall be qualified in accordance with the requirements of ASME Sections I and IX, latest edition. The rules for welding boilers and component parts are presented in the PW part of ASME Code, Section I. The PW part contains most of the dimensional welding rules and diagrams showing some acceptable types of welded construction.

A manufacturer shall prepare and qualify a WPS before it can be used for Code fabrication. To qualify a WPS, the manufacturer has a welder perform the weldment exactly as described in the WPS, then the weldment coupons are subjected to tensile and bend tests in order to prove that the procedure will produce a weld having the properties required for its intended application. These test results are then filed with a PQR.

Written WPSs to be used in the project along with supporting PQRs shall be submitted to the utility company for review and acceptance. WPS submittals shall include intended applications and specific joint configurations for each procedure.

The standard welding processes listed in Table B-4 are normally allowed with the noted restrictions. For nonstandard welding acceptance, in addition to the ASME requirements, the utility company should consider the following:

- Proposed applications and limitations to those applications
- In-process inspections to ensure that process remains under control
- NDE required for completed welds
- Any special welder qualification requirements
- Historical evidence supporting quality of welds

Table B-4
Standard Welding Processes

Welding Processes	Restrictions
Gas tungsten arc (GTAW)	Addition of filler metal always required
Shielded metal arc (SMAW)	None
Gas metal arc (GMAW)	Spray transfer only Auto or machine welding only Used at fabrication facility only Flat and horizontal positions only
Submerged arc (SAW)	Auto or machine welding only Used at fabrication faculty only No alloy in the flux
Flux cored arc (FCAW)	Externally shielded only 75/25 A/CO_2 (all positions) CO_2 (flat and horizontal positions only) Short arc transfer mode prohibited Used at fabrication facility only

Each weld shall be uniform in width and size throughout its full length. Each layer of welding and all weld surfaces shall be smooth and free of blowholes, craters, scale, porosity, incomplete penetration, slag, cracks, pinholes, and undercut, and shall be completely fused to the adjacent weld heads and/or base metal. In addition, the cover pass shall be free of coarse ripples, irregular surface, nonuniform bead pattern, high crown, and deep ridges or valleys between heads. Defects appearing on the surface of any bead of welding or as otherwise discovered in any of the welding shall be removed by chipping or grinding before depositing successive passes. Base metal repairs shall be performed in accordance with the requirements of the material specification. Repair of a repair may not be acceptable. Other welding requirements include the following:

- The root pass should be GTAW for tube-to-tube shop welds and no consumable inserts may be allowed in tube-to-tube butt welds.
- Fin-to-tube welds should exhibit the following characteristics:
  - Smooth surface in as-welded condition

  - No undercut, porosity, or inclusions
  - Flat or slightly convex fillet weld at an included angle of 45° ±10° (3/16-in. [4.76 mm] size or as specified)
  - Demonstration of penetration into the tube not to exceed 0.10 in. [2.54 mm]
  - Minimum 95% penetration into the fin
- Double-welded full-penetration joints require back gouging of the root to sound metal, followed by PT examination before depositing metal on the second side.
- Welding on carbon steels shall not be interrupted before the root and second passes have been completed. Welding on low-alloy steels shall not be interrupted until 3/8 in. (9.53 mm) or 1/4 the groove thickness, whichever is greater, has been filled.
- The following applies to the GTAW process:
  - When welding carbon and low-alloy steel and stainless steel, the torch shield gas and purge gas shall be argon.
  - When welding nickel-based alloys, the torch shield gas and purge gas shall be argon, helium, or a combination of argon and helium.
  - A purge is required only during the deposit of the first 3/16-in. (4.76 mm) thickness of weld metal in butt joints in stainless-steel low-alloy (>3% Cr) steel, and nickel-based alloys.
- For SMAW welding, individual head thickness shall not exceed 3/16 in. (4.76 mm). Deposited bead width shall not exceed six times the electrode core wire diameter except when welding the cap pass on groove welds. When welding the cap pass on groove welds, the maximum deposited bead width may be increased to eight times the electrode core wire diameter.
- For FCAW and CMAW welding, individual head thickness shall not exceed 1/4 in. (6.35 mm), except for groove welds, which are not limited in thickness. The bead width shall not exceed 1/2 in. (12.70 mm) except in the vertical position where the maximum head width is 1 in. (25.40 mm).
- For single-wire SAW welding, individual head thickness should not exceed 1/4 in. (6.35 mm), except for groove root passes, which are not limited in thickness. The bead width shall not exceed 1/2 in. (12.70 mm). In the horizontal position, only fillet welding is permitted and the maximum single pass horizontal fillet size is 5/16 in. (7.94 mm).

Welder Qualification

All pressure-part welding shall be performed by personnel qualified in accordance with a preestablished PQR. The parameters involved in these qualifications include type of material, thickness of material, type of filler metal, position of welding, and factors related to preheat and postheat. The contract shall have a system in place that ensures that welders have been properly

qualified and that their qualification has been maintained as required in ASME Section IX. Records of welder qualification shall be available for review by the utility company. Welder shall be requalified where there is a question regarding the ability to make welds meeting the project requirements.

Welding Filler Materials

All welding filler materials shall meet the requirements of the applicable AWS filler material specification. Some suggested welding filler materials are listed in Table B-5.

Table B-5
Welding Filler Materials

Base Materials	TIC	Electrode
CS to CS	ER70S-2	E6010 or E7018
CS to T-l 1	ER80S-B2	E8018-B2
CS to T-22	ER90S-B3	E9018-B2
CS to T-1A	ER70S-2	E7018-Al
T-1A to T-1A	ER70S-2	E7018-A1
T-2 to T-2	ER80S-B2	E8018-B2
T-11 to T-1	SFA-5.28 ER80S-B2	SFA-5.5 E8018-B2
T-22 to T-22	SFA-5.28 ER90S-B3	SFA-5.5 E9018-B3
T-22 to TP-304H	SFA-5.14 ERNiCr-3	SFA-5.11 ENiCrFe-2
TP-304H to TP-304H	SFA-5.9 ER309	SFA-5.4 E308-16
TP-304H to TP-347H	SFA-5.9 ER347	SFA-5.4 E347-16
TP-316H to TP-316H	SFA-5.9 ER316	SFA-5.4 E316-16
TP-321H to TP-321H	SFA-5.9 ER347	SFA-5.4 E347-16

Other general requirements include:

- For the SMAW process, covered electrodes shall not exceed 5/32 in. (3.97 mm) in diameter.
- For the SMAW process, covered electrodes for carbon- and low-alloy steel welding shall be low-hydrogen type (EXX18) and shall have been purchased in hermetically sealed metal containers.
- Low-alloy steel filler materials for 1-1/4Cr-1/2Mo and 2-1/4Cr-1Mo shall have 0.12% carbon content where the design temperature is over 800°F (427°C).
- Stainless steel filler materials for welding on stainless materials shall have a carbon content range of 0.04% to 0.08% when the design temperatures are over 850°F (454°C).
- Joints between stainless and low-alloy steel where the service temperature exceeds 300°F (149°C) shall be welded using inconel filler materials.
- For FCAW welding, the shielding gas used must be the same as that used by the manufacturer during product qualification testing.

Attachment Weld Material Selection

Welded attachments to the boiler pressure components include slip lugs, spacers, tube tie bars, buckstays, ladder straps and supports, extended heat transfer surfaces, studs, refractory anchors, and fins [66]. The weld filler material designations are the SFA/AWS classifications for coated electrodes covered in SFA 5.1, 5.4, 5.5, and 5.11. The corresponding GTAW, GMAW, and FCAW filler metal is also used. Attachment weld material selections are divided into three groups. The Group I weld material selection is listed in Table B- 6, which is based on the following principles:

- Minimum code preheat requirements
  - P-1 up to 1-in. (25.40-mm) thickness 60°F (16°C); over 1 in. (25.40 mm) 250°F (121°C) min
  - P-3 to 5/8 in. (15.88 mm) 50°F (10°C), over 5/8 in. (15.88 mm) 175°F min (79°C)
  - P-4 250°F (121°C) min
  - P-5A 300°F (149°C) min
  - P-5B 400°F (204°C) min
  - P-8 60°F (16°C)
  - P-43 60°F (16°C)
  - P-45 60°F (16°C)
- Match filler metal to lower strength metal

Table B-6
Weld Filler Material Group I Attachments

Tube Material	Attachment Material	Weld Filler Material
Table B	6 Weld Filler Material Group I Attachment	Table B
P-3	P-3, P-4, P-5	E8018-B2
P-5A, 5B	P-5A	E9018-B3
P-5B (9Cr)	P-5B (9Cr)	E505
P-5B (T-91)	P-5B (Gr 91)	Matching filler E9018-B9

The Group II weld material selection is listed in Table B-7, which is based on the following principles:

- Avoid in-service embrittlement of Type 309 filler material
- Use superior creep rupture properties of nickel filler and closer matching thermal expansion characteristics
- Material selection of attachment based on base metal properties, service temperature and corrosive environment

Table B-7
Weld Filler Material Group II Attachments

Tube Material	Attachment Material	Weld Filler Material
P-1, P-3, P-4, P-5	304H, ASTM A297	ENCrFe-2 (Temp >800°F [427°C])
	ASTM A560, 253MA Alloy 600, 601, 825 HR-160, 45TM	E309 (Temp <800°F [427°C])

The Group III weld material selection is listed in Table B-8, which is based on the following principles:

- Matching filler metal for P-8 metals to match base metal properties
- NiCrFe-2 is a general purpose filler metal for all nickel alloys

Table B-8
Weld Filler Material Group III Attachments

Tube Material	Attachment Material	Weld Filler Material
P-8 (T-304H)	P-8 (304H)	E308H
P-8 (347H, 321H)	P-8 (347H, 321H)	E347 alternate EniCrFe-2
Inco 825, 600, 625	All materials	EniCrFe-2

Joint Design and Preparation

The following lists the weld joint design and preparation recommendations:

- Butt joints involving a wall thickness transition shall be configured to meet the envelope requirements of ANSI B31.1, Figure 127.4.2.2.
- All field butt joint weld preparation shall be 37-1/2° ±2-1/2° with a 1/16-in. (1.59-mm) + 0 in. - 1/32-in. (0.79-mm) land, unless otherwise required.
- For single-welded tube or tube joints ID mismatch shall not exceed 1/16 in. (1.59 mm).
- Joints between stainless and low-alloy steel tubes shall utilize a groove with at least a 60° angle.
- Prior to welding, surfaces to be welded and adjacent surfaces for at least 1/2 in. (12.70 mm) shall be clean and free of any scale, rust, oil, grease, paint or other extraneous material. Tools, such as grinders, and wire brushes, which have been used on carbon or low-alloy steels, shall not be used on stainless steel.
- Where a weld preparation has been made with a thermal process such as oxyacetylene cutting, or air-arc gouging, 1/16 in. (1.59 mm) of the surface shall be removed from the heat-affected area by grinding or machining before welding.

Preheat and Interpass Temperature

The need for preheating is not mandatory, but a general guide for preheating is in the nonmandatory appendix, Section A-100.

- For tack welding and temporary attachment welding, the recommended minimum preheat temperatures of ASME Section I, Appendix A-100 shall be considered mandatory.
- When determining the required preheat temperature, the material thickness is the thickness of the thicker member being joined.
- When pressure parts of two different grades are joined by welding, the higher preheat and postweld heat treat shall control.
- Elevated preheat (temperatures above 50°F [10°C]) shall be by electric resistance or induction heaters. Exceptions to this requirement are:
  - Manually applied flame heat may be used when welding tube with a maximum OD of 4-1/2 in. (114.30 mm).
  - Manually applied flame heat can be used for attachment welds. In such cases, care must be exercised to heat the entire area uniformly, avoiding any localized hot or cold spots.
  - Manually applied flame heating can be used for tack welds.
- Surface temperature measurements including thermocouple, contact pyrometers, or temperature crayons, shall be used to verify that the joint to be welded and adjacent surfaces in all directions, for a distance equal to at least the thickness of the material but not less than 3 in. (76.20 mm), are at or above the specified minimum preheat temperature before and during all welding.
- Where there is a specified maximum interpass temperature, the joint shall be below that temperature immediately prior to beginning any weld bead.

Post-Weld Heat Treatment

Mandatory post-weld heat treatment (PWHT) requirements are listed for base metals identified by a P number classification listing in QW-422 of Section IX. In most cases, PWHT is not required for boiler tubes. If the application cannot be exempted by the exceptions listed in ASME Code, Section I, Table PW-39, PWHT shall be performed in accordance with the following:

- For local PWHT, electric resistance or induction heaters shall be used. The minimum heated hand width shall be five times the tube wall thickness.
- Above 800°F (429°C), the heating and cooling rates shall not exceed 400°F (204°C) per hour divided by the maximum material thickness (in. or mm). Regardless of the calculated value, the rate shall not exceed 400°F (204°C) per hour, nor need it be less than 100°F (38°C) per hour.

Heat Treatment

All assemblies are to be heat-treated per applicable code. The written PWHT procedure shall be submitted to the utility company for review. Stainless steel assemblies shall be heat-treated as recommended in Table B-9.

Table B-9
Recommended Heat Treatment for Stainless Steel Materials

Material	Temperature and Duration
TP 304H and TP 316H	Solution anneal at 1950°F (1065°C) ±50°F (10°C) for a minimum of 15 minutes, then rapid air cool.
TP 347H	Solution anneal at 2150°F (1177°C) ±50°F (10°C) for a minimum of 30 minutes, then rapid air cool.
TP 321W	Solution anneal at 2050°F (1121°C) ±50°F (10°C) for a minimum of 20 minutes, then rapid air cool.

All formed safe ends shall be heat treated. Furnace charts verifying proper heat treatment shall be furnished to the utility company after completion.

Nondestructive Examination

ASME Code, Section I references Section V for NDE requirements. NDE examiners shall be qualified in accordance with the requirement of Non-Destructive Testing Standard SNT-TC-1A. The ASME Code specifies minimum NDE requirements. The manufacturers and the utility companies must decide on what quality level is required from a product reliability and cost standpoint. Most manufacturers find it desirable to exceed the minimum code requirements for the reliability consideration. Table B-10 compares one manufacturer's practice with the minimum requirements of the Code [69]. For attachment welds, statistical sampling techniques are normally used to determine the number of welds to be examined. For example, 10% of all load-carrying attachment welds should be dye penetrant tested. If 3% or more of the welds fail the inspection, additional weld NDE tests may be required.

Table B-10
Nondestructive Examination of Shop-Fabricated Components

	Components	Required by ASME Code, Section I	Additional NDE Required per Company Standards
	Drums		
A	Drum plate		UT on 9-in. (228.60 mm) grid
B	Longitudinal weld seams Circumferential weld seams	RT 100%, visual	MT 100% inside and outside surface of weld
C	Nozzle and stub attachment weld		
	1. Under 6-5/8-in. (168.27-mm) OD.	Visual	UT 10% minimum, MT 100% outside
	2. 6-5/8 (168.27-mm) OD up to 12-3/4-in. (323.80-mm) OD.	Visual	UT or RT 10% and MT 100% outside
	3. 12-3/4-in. (323.80-mm) OD and larger nozzles.	Visual	UT or RT 100% and MT 100% outside
	4. Downcomer connections to drum.	Visual	UT and RT 100% and MT finished surfaces of all welds
D	Surfaces exposed by openings for 6-5/8-in. (168.27-mm) diameter and larger nozzles or stubs	Visual	100% MT
Headers downcomers and piping			
A	Circumferential Seams		
	1. Welds not in contact with furnace gases.		
	a. Containing steam. Header over 16-in. (406.40-mm) OD regardless of thickness or over 1-5/8-in. (41.27-mm) thick regardless of OD.	RT 100%, visual	MT 100% outside
	b. Containing water. Header over 10-3/4-in. (273.00-mm) OD regardless of thickness or over 1-1/8-in. (28.57-mm) thick regardless of OD.	RT 100%, visual	MT 100% outside
	2. Weld in contact with furnace gases.		
	a. Header over 6-5/8-in. (168.27-mm) OD regardless of thickness or over 3/4-in. (19.05-mm) thick regardless of OD.	RT 100%, visual	MT 100% outside
	3. Header socket welds.		
	a. Carbon steel thru croloy 1/2.	Visual	MT 10% outside
	b. Croloy 1-1/4 and higher alloys.	Visual	MT 25% outside
	4. Nozzle welds to headers.		
	a. Under 6-6/8-in. (171.45-mm) OD.	Visual	MT 100% outside

Table B-10 (Con't.)
Nondestructive Examination of Shop-Fabricated Components

A	Circumferential Seams				
		b.	6-6/8-in. (171.45-mm) OD up to 12-3/4-in. (323.80-mm) OD.	Visual	UT or RT 10% and MT 100% outside
		c.	12-3/4-in. (323.80-mm) OD and over.	Visual	UT or RT 100% and MT 100% outside
	5. Attachment of header end plugs and spun header ends.			Visual	MT 100% outside
	6. Attachment of hollow end plugs using full penetration welds.			Visual	RT 100% and MT 100% outside
	7. Flat header end plate welds.			Visual	UT or RT 100%
	8. Base material for flat header end plates.			Visual	UT
B.	Surfaces exposed by openings for 6-5/8-in. (168.27-mm) diameter and larger nozzles or stubs			Visual	100% MT
C.	Handhole fittings and radiograph plug seal welds			Visual	MT 100% root pass and final weld
Superheater, reheater, and economizer					
A.	SH and RH tubing			UT or hydro	UT 100%
B.	Electric resistance butt welds			Visual	Destructive bend test of weld samples (minimum 2 per shift)
C.	Ring butt welds			Visual	RT 2%
D.	Shop hydrostatic testing of SH, RH, and economizer sections			Visual	100%
Furnace walls and screens					
A.	Butt welds			Visual	100% fluoroscopy or RT 10%

* Radiographic test (PT), Ultrasonic test (UT), Magnetic particle test (MT)

Ultrasonic Inspection of Raw Tube Material

All boiler tubes shall be 100% ultrasonic inspected in accordance with ASTM E213, and:

- Scanning shall be performed in one circumferential direction under the identical condition in which the calibration is performed.
- The pitch of feed helix during scanning shall be such that the tube is 100% tested.
- The examination shall be performed after heat treatment and straightening.
- The surface condition for the examination shall be in accordance with ASTM E213, Section 5.
- The time interval between equipment calibrating checks shall be as described in ASTM E213, Section 10.2.

- The artificial discontinuities in calibration standard shall be U or V notched, 1 in. (25.40 mm) in length, not more than 12.5% of the wall thickness in depth, and with a width not exceeding twice the depth. The notches shall be made using an electric discharge machine (EDM) and placed axially along the calibration standard with one notch on the outer surface and another on the inner surface with one notch on each end of the calibration standard.
- Hot-finished tubing shall have a consistent surface finished no greater than 250 RMS. The calibration standard for U- or V-notched artificial discontinuities shall be less than 1 in. (25.40 mm) in length and shall not be greater than 5% of the wall thickness in depth, with a width not exceeding twice the depth.
- The method of measuring dimensions and tolerance limits of the artificial discontinuities shall be as specified in ASTM E213, Section 8.

Visual Examination

All welds including temporary attachment welds shall be visually examined by a qualified examiner other than the welder who made the weld. Conditions considered unacceptable are:

- Cracks
- Undercut depth exceeding 1/64 in. (0.40 mm) or 0.1 t, whichever is less (where t is the base metal thickness)
- Incomplete penetration
- Lack of fusion
- Groove weld reinforcement in excess of the value listed in the Table B-11.

Table B-11
Maximum Allowable Reinforcement in Tube Butt Joints

Base Metal Thickness	Maximum Reinforcement in Tube Butt Joints
t ≤1/8 in. (3.18 mm)	3/32 in. (2.38 mm)
1/8 in. (3.18 mm) <t ≤3/16 in. (4.76 mm)	1/8 in. (3.18 mm)
3/16 in. (4.76 mm) <t ≤1/2 in. (12.70 mm)	5/32 in. (3.97 mm)
1/2 in. (12.70 mm) <t ≤1 in. (25.40 mm)	3/16 in. (4.76 mm)

Radiographic Examination

For both automatic and manual tube butt welds, 100% RT is recommended. Real-time radioscopy of straight tube butt welds is now available. Table B-12 compares the film and real-time radiography techniques [66].

Table B-12
Comparison of Film and Real-Time Radiography Techniques

Film Radiography	Real-Time Radioscopy
Recognized by ASME Code in ASME V, Article 2	Recognized by ASME Code in ASME V, Article 2
Labor-intensive setup	Fully automated setup for inspection of butt welds in straight tubes
Static images: High level of skill required to interpret	Dynamic images in motion: Easier to interpret location and nature of indications
Multiple views required for full weld inspection	360° rotation gives “film side” view of entire weld
Delay in technique quality feedback	Immediate technique quality feedback with “on-the-fly” adjustment capability
Delay in weld quality feedback to welder and delay in the resolution of welding problems	Immediate weld quality feedback and timely resolution of welding problems
High direct costs to customer Labor intensive Require technician specialists	Low direct cost to customer Allows higher percentage of inspection at lower total cost Less time required for technician specialists
Permanent film record	Permanent video tape record

Real-time radioscopy of straight tube butt welds offers advantages in timely quality feedback, speed, coverage, cost, 360° viewing angles, and ease of interpretation. The film technique has an advantage in image quality. It is the utility company’s decision whether to accept the real-time radioscopy technique for tube butt welds examination.

The RT procedure shall be submitted for review. The procedure should include the description of the following items for proposed project usage:

- Equipment
- Radiograph techniques
- Film types and name of the manufacturer
- Film identification and marking methods
- Surface preparation requirements
- Source-to-film distance
- Penetrometer selection and sensitivity
- Radiograph density
- Acceptance standards

All radiographs shall be free from mechanical, chemical, or other blemishes to the extent that they cannot be masked or be confused with the image of any discontinuities in the areas of interest of the object being radiographed. Such blemishes include, but are not limited to:

- Fogging
- Processing defects, such as streaks, watermarks, or chemical stains
- Scratches, finger marks, crimps, dirtiness, static marks, smudges, or tears
- Loss of detail due to poor screen-to-film contact
- False indications due to defective screens or internal faults

Hydrostatic Testing

If fabricated tubes, elements, panels, or headers are required to be hydrostatically tested by the purchase request or drawing, they shall be tested at 1.5 times the design pressure in accordance with ASME Boiler and Pressure Vessel Code, Section I. The test pressure shall be held for a minimum of 10 minutes. The test medium (water) shall have a minimum temperature of 70°F (21°C). All joints shall be examined for leaks. If leaks are found, they shall be repaired and the hydrostatic test repeated.

Special Requirements for Headers

The headers shall be designed and fabricated in accordance with ASME Code, Section I. Some additional requirements can be superimposed on the new/replacement header to improve the header reliability. These additional requirements are obtained from lessons learned in the past. Some of the specifics are described in the following:

- All headers shall be made from seamless pipe.
- All tees in high-temperature headers shall use a forging design.
- The circumferential ligament spacing shall be a minimum of 0.5 in. (12.70 mm) based on the header ID. The spacing shall be maximized as much as possible and allow for adequate tube support/flexibility. Header remaining life assessment software can be used to evaluate the different options in design.
- The suggested tube stub joints on high-temperature headers shall be as close to a full-penetration weld as possible with a maximum unwelded landing of 1/8 in. (3.18 mm) before welding.
- No tube stub penetrations are allowed in circumferential welds or in the area of transition between header pipe and tee.
- All tube stubs and supply stubs shall be 2 in. (50.8 mm) longer than the existing so that the existing weld will be removed.
- The tube stub bore hole shall be chamfered on the ID corner.

- All gamma plugs shall be of nonthreaded, welded design.
- All girth welds on high-temperature headers shall be submerged arc welded using a low acid flux (Basicity Index greater than 1.5).
- A gusset plate shall be welded to the header before stress relieving for all field attachments so that no welding directly to the header is required in the field.
- All lubricants shall be water soluble.
- MT and repair on the tube stub weld shall be performed before stress relieving. MT shall be performed again after stress relieving.
- All header end plate weld shall be inspected by RT or UT. The acceptance criteria shall be in accordance with ASME Section I, PW 52.
- All tube stubs shall be brushed out of all debris obtained during fabrication. The header shall then be internally flushed, drained, and checked visually for any debris prior to shipment.

Dimensional Measurement

Completed tubes, elements, and tube panels shall be dimensionally examined to reduce potential problems in installation. Some of the standard procedures for dimensional check are listed in the following:

- Make a full-size component layout (template), which includes any tube, bends, panel openings, or configuration changes associated with the component. Support the component over the layout (template) parallel to the floor. One component end shall be directly over the layout line to which it corresponds. Locations shall be established using a plumb line. Inspect the following characteristics by dropping the plumb line from various locations along the edges of the component to the template.
  - Component width or depth
  - Component length or height
  - Component squareness
  - Component straightness
  - Component opening locations
- Fasten straight edge across both ends of the component. Each straight edge shall be in contact with the tube end that protrudes the farthest. These straight edges shall be fixed so that they are perpendicular to the long axes of the component. Using straight edges (or chalk lines) tilting the short axes, mark the component corner points (see Figures B-1, B-2, and B-3) on the component attached straight edges. The following measurements shall be made:
  - Measure component length and width at the corner points (both sides and both ends). Use these dimensions to determine length and width as well as parallelism.
  - Measure the two diagonal dimensions (from corner point to corner point). Compare these two dimensions to determine component squareness.

  - Measure the maximum gap on both ends between the panel end straight edge and the panel ends.

- Check the location of any component openings by measuring from the opening centerline to both the ends and sides.
- Check component flatness by laying a straight edge across the tubes and measuring the difference between high and low spots.
- Check component straightness by stretching a string, set off from the component by 1 in. (25.40 mm) blocks at both ends, along each component edge and measuring the distance between the string and component edge along the edge length.
- Check perpendicularity of all component edge attachments (that is, fins, lug, and spacers) using a carpenter's square with one edge across the tubes.
- For bent components, the bend angle shall be checked with a template or floor layout.

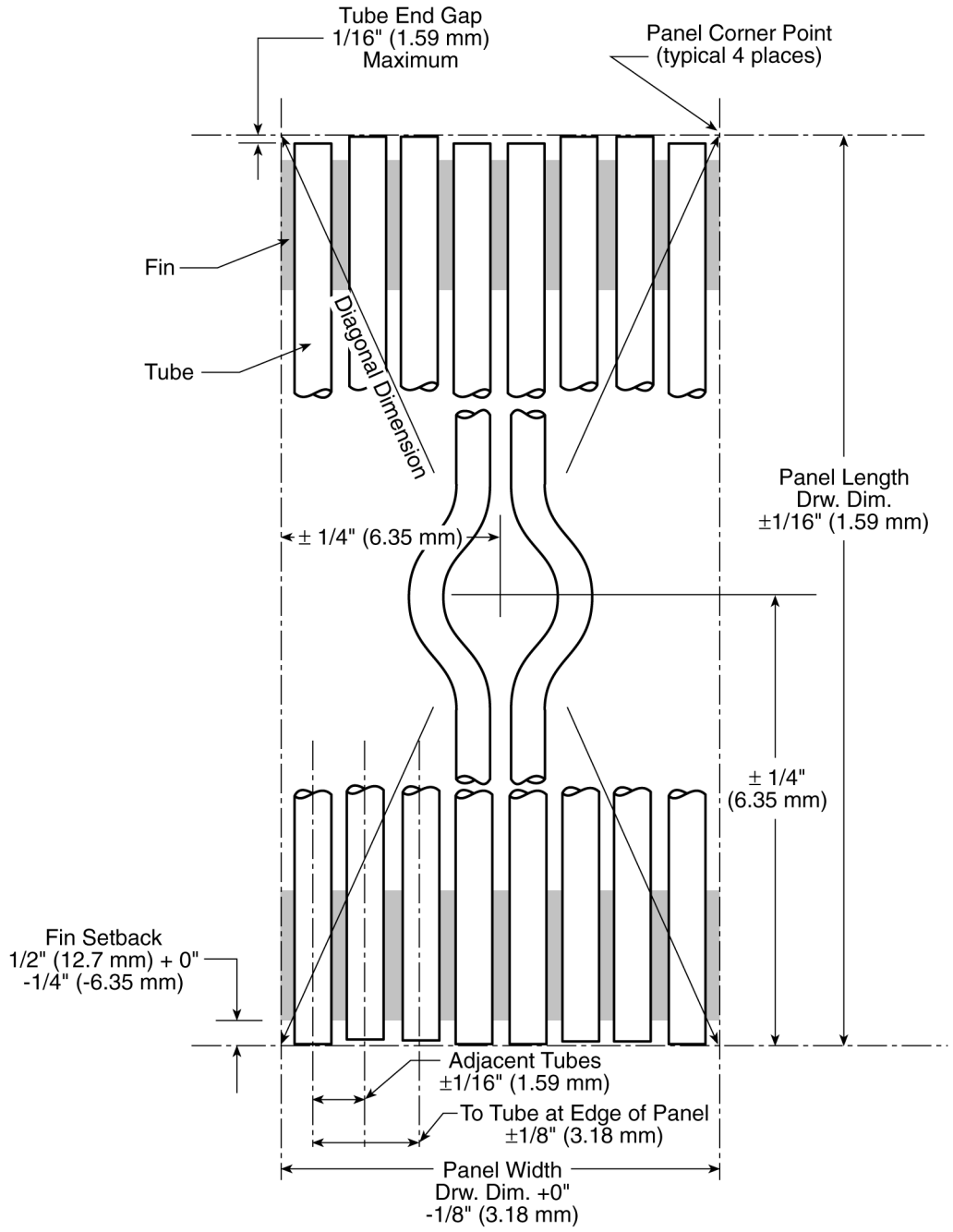

Figure B-1
Welded Tube Panel Dimensional Tolerances

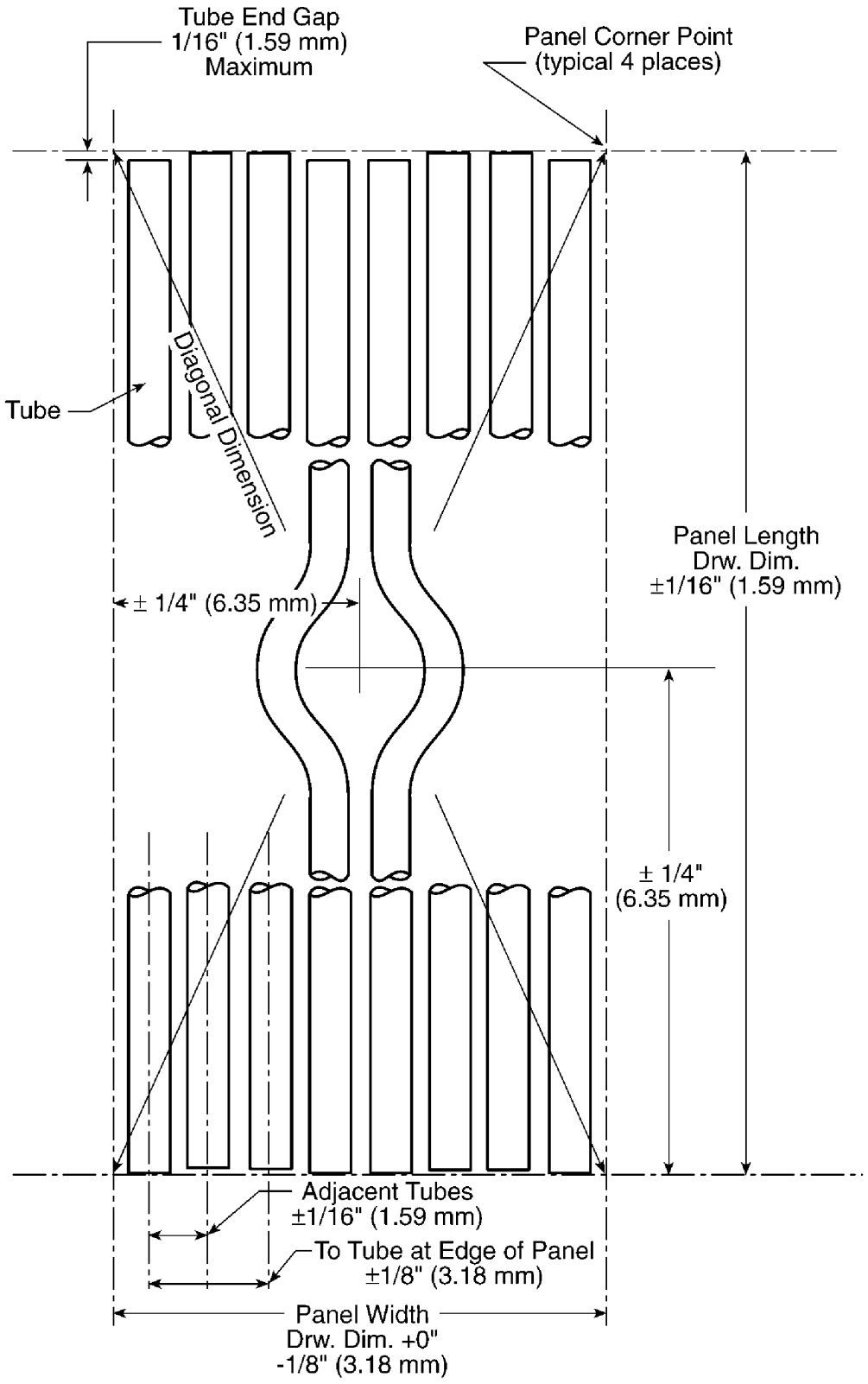

Figure B-2
Loose Tube Panel Dimensional Tolerances

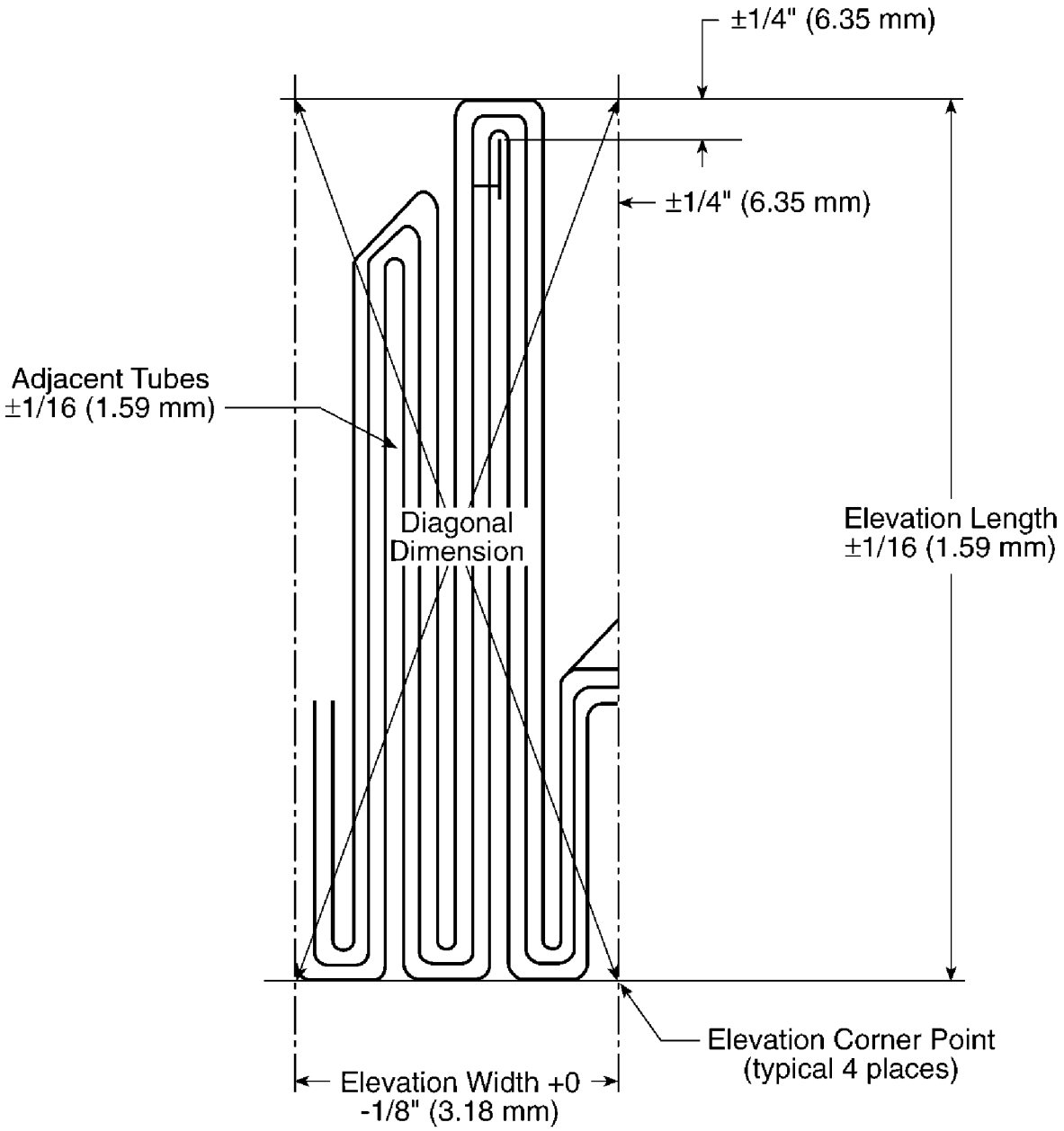

Figure B-3
Welded Element Dimensional Tolerances

Some suggested dimensional tolerances are listed in Table B-13. These dimensions tolerances—for example, more stringent or less stringent—should be adjusted to the specific needs of the project or negotiated with the manufacturer, as deemed necessary. The manufacturer shall perform the measurement and have a documented checklist to ensure that the component complies with all dimensional requirements.

Table B-13
Dimensional Tolerances

Dimension	Tolerance
Panel and element length	±1/16 in. (1.59 mm) and ±1/4 in. (6.35 mm), respectively
Panel and element width	+0 in., -1/4 in. (6.35 mm) overall
	+0 in., -1/8 in. (3.18 mm) from opening CL
Panel and element side and end parallelism	1/8-in. (3.18 mm) difference, max
Panel and element squareness (diagonals)	3/16-in. (4.76-mm) difference, max
Tube end gap	1/16 in. (1.59 mm), max
Fin set back	1 in., (25.40 mm) +0 in., -1/4 in. (6.35 mm)
Sootblower opening locations	±1/4 in. (6.35 mm)
Other opening locations	±1/2 in. (12.70 mm)
Panel and element flatness	3/8 in. (9.53 mm) max
Panel and element straightness	±1/16 in. (1.59 mm) from true
Fin location	±1/32 in. (0.79 mm) of tube centerline
Tube centerline spacing	
- to adjacent tubes	±1/16 in. (1.59 mm)
- to tube at edge of panel	±1/8 in. (3.18 mm)
Panel and element bench angles	±1 in. (25.40 mm)
Field weld location/assembly	±1/8 in. (3.18 mm)
Bend location	±1/2 in. (12.70 mm)
Location of attachments internal to elements	±1/2 in. (12.70 mm)
Cut lines-to-support/alignment members that attach	±1/2 in. (12.70 mm)
Component flatness	3/8 in. (9.53 mm) max

Packaging and Shipping

No material or equipment shall be shipped from its point of manufacture before it has been fully inspected and accepted by the utility company unless the inspection is performed on the job site as agreed on the contract. Acceptance of any material or components shall not relieve the manufacturer's responsibilities for meeting all requirements and shall not prevent subsequent rejection if such materials or components are later found to be defective. All fabricated components for shipment shall be prepared in such manner as to facilitate handling and to protect them from damage in loading, unloading, and transporting. The manufacturer shall be responsible for all damage due to improper preparation or loading for shipment. Boxes and crates shall be marked and have a packing list enclosed showing parts contained. All elements and components surfaces shall be coated or otherwise protected with a suitable rust preventative. The

component shall be visually inspected to ensure that these packaging steps have all been completed. Prior to the initial shipment, the contractor shall submit a detailed shipping schedule that lists the approximate number of shipments and approximate dates when each shipment will arrive at the construction site. Some of the specifics for the preparation of the shipment include:

- The components shall be cleaned with proper techniques, for example, internal debris removal with sponge.
- Carbon and low-alloy steel tubes shall be painted with an approved oxide primer with a dry coat thickness of .002 in. (.051 mm) minimum.
- For carbon and alloy steel tubes, machined surfaces of weld ends and the tubing outside surface adjacent to the weld ends, for a distance of at least 1 in. (25.40 mm), shall be painted with Deoxaluminate.
- All carbon steel, low-alloy steel, and stainless steel tube ends shall be capped with plastic caps.
- Tubes, elements, and panels shall be marked using one of the following formats:
  - After completion of beveling, tube ends shall be marked using paint sticks and stressless metal stamps. Markings shall be located 6 in. (152.40 mm) from each end, approximately 1-in. (25.40-mm) tall.
  - Steel plates stamped with panel mark numbers shall be attached on the side of the panel.

Stainless Steel Contamination Prevention

Special requirements are needed for the contamination prevention of stainless steel material and components. Some of the specifics are described in the following:

- Use straps, slings, or noncoated steel chains, and do not use galvanized chains.
- Perform all water or steam cleaning, hydrotesting, and water quenching with water with the requirements as recommended in Table B-14.

Table B-14
Water Quality

Item	Maximum (Expressed as ppm of $CaCO_3$)
Hardness : TDS	≤10 ppm; ≤100 ppm
Ca++, Mg++	≤5 ppm (each)
SO_4, Fe, Na, Cl, NO_3	≤10 ppm (each)
Fl	≤1 ppm

The use of any other fluid or fluid additive requires the approval of the utility company. Do not use alkaline to perform water cleaning.

- Remove all water from the components by draining and sponging.

- Perform all solvent cleaning with an approved thinner, that is, Thurmalox 122.
- Do not burn off any tape residue, markers, or unknown contaminants.
- Use only dry-filtered compressed air to blow out components.
- Use only stainless steel brushes to remove oil deposits and rust stains.
- Any lubricants for bending or swaging shall not contain sulfur or chlorides. The lubricants shall be removed immediately after use with steam.
- Do not paint or coat stainless steel components. If painting or coating is required, use only those approved by the engineer, such as Con-Lux Red oxide #376-78 or Pratt & Lambert #KP 551.
- Do not allow any coated band iron to contact components.
- If outside storage is used, cover unpainted components with 6 mil (0.152 mm) polyethylene. Unpainted components shall be covered with tarps during transportation.
- Avoid any storage of components that allows water to accumulate in contact with the material.
- Use only plastic end caps with stainless steel washer inserts or stainless steel end caps.

Documents Submittal and Review

Documentation submittal and review are important functions in the complete project process. The requirements for documents, drawings, and submittal schedule should be established early in the project. All drawings, calculations, and any other documents submitted shall become the property of the utility company. No restrictions on the future use of these documents and information contained in the documents shall be placed on the utility company by the manufacturer. Some of suggested general requirements are described in the following:

- Drawings shall be identified by serial numbers and descriptive titles indicating plant and unit designation and utility company's contract number, and they shall be signed by a responsible representative of the manufacturer.
- All drawings and engineering calculations shall be reviewed and accepted by the utility company prior start of fabrication. The review comments provided by the utility company shall be incorporated or resolved. Review and acceptance of drawings and calculations by the utility company shall not relieve the manufacturer's responsibility for correctness nor compliance with the specification.
- Contractor shall permit the utility company to examine the manufacturer's fabrication/shop drawings.
- The manufacturer shall furnish to the utility company the erection drawings and instructions in such detail as necessary for installation, operation, and maintenance of the equipment. These drawings shall contain all the necessary information for proper installation of the boiler components. The erection drawings shall include, but are not limited to, reference drawings, part numbers, weld information (cut-line, shop and field weld locations, special

weld requirements, and procedures), attachments and fastener locations and requirements, tube and header size and end preparation information, weights of components, erection sequences, and special rigging requirements.

- Upon receiving notice of acceptance of any drawing or technical data from the utility company, the contractor shall forward a certain amount of hard copies and reproducibles, as specified in the specification, to the utility company for internal use and distribution. Reproducibles shall be of such readable quality that can be microfilmed to 35mm and produce a clearly readable print when reduced to 50% of the size of original drawing. Final drawings shall also be submitted on a designated computer software format as required in the specification.

The suggested documents to be submitted with the proposal are listed in Table B-15.

Table B-15
List of Documents to be Submitted with the Proposal

Documents	Remarks
Complete list of exceptions	If the contractor takes exception or proposes alternatives to any requirements of the procurement specification, a list with detailed explanation shall be submitted.
Fabrication facility	The proposed fabrication facility and component delivery methods shall be provided.
Subcontract plan	All subcontracting plans shall be submitted for acceptance.
Preliminary arrangement drawings and project schedule	The preliminary arrangement drawings and milestone project schedule, which indicates the contractor, shall provide a schedule for manufacturing, inspection, shipping plan, and other critical items shall be provided.
Tube material procurement specification including acceptance criteria and notch calibration procedure	The proposal shall indicate tube materials to be used in the project, that is, cold-draw, hot-finish, or “super” hot-finish tubing. Tube procurement specification and acceptance critical shall also be included.
Tube bending procedure	Tube bending procedure and acceptance criteria shall be submitted with the proposal.
Nonstandard welding procedure, alternate fillet material, PWHT, and NDE requirements	The nonstandard ASME Code, Section I pre-approved welding procedures to be used in the project shall be submitted for review and acceptance with the proposal to avoid potential future technical and contract debate.

Other suggested general documents and drawings submittal schedules are listed in Table B-16.

Table B-16
Documentation Submittal Schedule

Documents	Remarks	Submittal Date
Schedule	Manufacturing and Inspection Plan and a detailed project schedule in the form of a Gantt chart.	30 days prior to the scheduled fabrication start date
NDE procedure	Written NDE procedures in compliance with the applicable requirement of ASME Section V.	60 days prior to fabrication
Radiographs	Acceptance of radiographs by the utility company representatives prior to shipment.	10 days prior to shipment
ASME Code data reports		At time of shipment
Material certification records		Within 4 weeks of final shipment
Engineering drawings and calculations, and final arrangement drawings	All drawings and calculations shall be reviewed and accepted by the utility company prior to fabrication, including the resolution of the comments.	45 days after award
Erection drawings and installation package	Erection drawings and installation package shall include details as necessary for installation and maintenance.	3 months prior to outage or 2 weeks prior to the first shipment
Nonconformance report	The utility company shall be notified of any conditions that do not conform to the project requirements, with proposed solutions and technical justification for disposition.	Immediately following the discovery of deviation
Authorization for shipment and list of fabricated components to be shipped	A completion document with list of fabricated components to be shipped, signed by a contractor's QA representatives, shall be submitted to the utility company.	Prior to each shipment
Detailed shipping list and projected schedule	The contract shall submit a shipping schedule, which lists the estimated number of shipments and dates for each shipment.	30 days prior to initial shipment
Final drawings and computer format drawing files		Within two weeks of final shipment

Source Inspections For Boiler Tube Components

The utility companies typically perform source inspection to ensure the quality of the fabricated boiler components. The source inspection can be performed by the utility company's own internal resources or by third party inspection personnel. Merely inspecting quality into the

product is no longer an option. In the past, source inspection could be a standard approach by which quality was assured. The quality of the components cannot be achieved simply through the inspection. Many potential problems cannot be discovered by the inspection alone due to the following reasons:

- Inspection techniques might not be capable of detecting all flaws in all locations
- Inspection personnel can make mistakes
- The time and resources do not normally permit 100% detailed inspection

However, the inspection remains to be an integral part of quality control process. The source inspector does provide project oversight and another opinion for the interpretation of NDE results. It is not necessarily the job of the utility company's inspector to repeat the effort from the manufacturer's own inspection team. It is not the inspection goal to merely discover defects. The discovered defects can result in rework, increased cost, and delays in material delivery. Undiscovered defects are the major reliability concerns. The ideal condition is for the utility company to work with the manufacturer to establish a high-quality fabrication process and to identify and control the critical manufacturing processes to prevent detects from occurring in the first place. The change should be changed from defect acceptance rates to zero defects, that is, prevent defects from occurring rather than using statistical sampling to determine the quality. It is a requirement that defects are not acceptable. Generally, once fabrication/construction is completed, there is no economical way of detecting specific manufacturing defects. These imbedded defects can reduce the component baseline reliability and potentially cause boiler tube failure. Source inspection process and procedures should be focused on the fabrication process.

The source inspectors represent the utility company in performing necessary fabrication inspection to ensure the quality of the material and fabricated boiler pressure components. Typically, the source inspector's responsibilities include, but are not limited to the following:

- Understand the contract scope, schedule, and technical requirements. Identify gaps in the manufacturing and engineering plan that could adversely affect project schedule and budget.
- Understand the fabrication processes and critical in-process indicators for the fabrication of quality components.
- Review the manufacturer's QA/QC manual and shop practices/procedures against the specification requirements to identify potential impacts on the quality of the fabricated components.
- Review fabrication processes and witness the trial fabrication and ensure that the process can produce quality products prior to full production.
- Establish and monitor critical fabrication in-process quality indicators to ensure that the final components can be fabricated within the established requirements. Provide recommendations, where feasible, to enhance and improve fabrication processes and methods.
- Perform the inspection duties as delegated by the utility company, that is, review NDE results and provide a second opinion, perform necessary inspection at critical holding points, witness the hydro tests, perform dimensional check for final assembly, and perform final visual

inspection prior to delivery. Report the problems in a timely manner to the utility company for resolution.

- Provide oversight for any contractual problems relating to delivery schedule and quality. Assist the utility company and the manufacturer in resolving conflicts.

Constructability Review

Another important factor in ensuring good quality final products and lower overall project cost is the constructability review. The constructability review involves construction personnel and other interfacing parties in the early stage of the design and fabrication process to solicit their knowledge and experience to achieve outage time, quality, and cost optimization. The tasks of the constructability review team involve the following:

- Define locations and areas for replacement.
- Establish critical interferences with other project activities, for example, design, fabrication, and delivery.
- Develop options for the most cost-effective installation and assess risks associated with each option.
- Identify the areas for improvement in fabrication with the following considerations:
  - Fabricate components in modules, thus reducing installation time and number of components to be handled.
  - Reduce the number of attachments and welds, especially field welds.
  - Reduce the potential of poor-quality welds and poor NDE tests due to weld locations, welding positions, and welding procedures.
  - Establish more efficient methods, paths, and sequences for installation.
- Reduce the potential for incurring extra costs and time associated with field installation due to access limitations.
- Review the technical specification and provide recommendations to be incorporated in the bid package. Establish critical path and needed delivery dates for specific components to eliminate the potential of project schedule delay.
- Participate in the technical bid evaluation.
- Review the erection drawings developed by the fabricator and develop detailed installation sequence and schedule.
- Coordinate component delivery schedule, unloading, cleaning, and storage on the project site.

Target:

Boiler Life and Availability Improvement

About EPRI

EPRI creates science and technology solutions for the global energy and energy services industry. U.S. electric utilities established the Electric Power Research Institute in 1973 as a nonprofit research consortium for the benefit of utility members, their customers, and society. Now known simply as EPRI, the company provides a wide range of innovative products and services to more than 1000 energy-related organizations in 40 countries. EPRI's multidisciplinary team of scientists and engineers draws on a worldwide network of technical and business expertise to help solve today's toughest energy and environmental problems.

EPRI. Electrify the World

SINGLE USER LICENSE AGREEMENT

THIS IS A LEGALLY BINDING AGREEMENT BETWEEN YOU AND THE ELECTRIC POWER RESEARCH INSTITUTE, INC. (EPRI). PLEASE READ IT CAREFULLY BEFORE REMOVING THE WRAPPING MATERIAL.

BY OPENING THIS SEALED PACKAGE YOU ARE AGREEING TO THE TERMS OF THIS AGREEMENT. IF YOU DO NOT AGREE TO THE TERMS OF THIS AGREEMENT, PROMPTLY RETURN THE UNOPENED PACKAGE TO EPRI AND THE PURCHASE PRICE WILL BE REFUNDED.

1. GRANT OF LICENSE

EPRI grants you the nonexclusive and nontransferable right during the term of this agreement to use this package only for your own benefit and the benefit of your organization. This means that the following may use this package: (I) your company (at any site owned or operated by your company); (II) its subsidiaries or other related entities; and (III) a consultant to your company or related entities, if the consultant has entered into a contract agreeing not to disclose the package outside of its organization or to use the package for its own benefit or the benefit of any party other than your company.

This shrink-wrap license agreement is subordinate to the terms of the Master Utility License Agreement between most U.S. EPRI member utilities and EPRI. Any EPRI member utility that does not have a Master Utility License Agreement may get one on request.

2. COPYRIGHT

This package, including the information contained in it, is either licensed to EPRI or owned by EPRI and is protected by United States and international copyright laws. You may not, without the prior written permission of EPRI, reproduce, translate or modify this package, in any form, in whole or in part, or prepare any derivative work based on this package.

3. RESTRICTIONS

You may not rent, lease, license, disclose or give this package to any person or organization, or use the information contained in this package, for the benefit of any third party or for any purpose other than as specified above unless such use is with the prior written permission of EPRI. You agree to take all reasonable steps to prevent unauthorized disclosure or use of this package. Except as specified above, this agreement does not grant you any right to patents, copyrights, trade secrets, trade names, trademarks or any other intellectual property, rights or licenses in respect of this package.

4. TERM AND TERMINATION

This license and this agreement are effective until terminated. You may terminate them at any time by destroying this package. EPRI has the right to terminate the license and this agreement immediately if you fail to comply with any term or condition of this agreement. Upon any termination you may destroy this package, but all obligations of nondisclosure will remain in effect.

5. DISCLAIMER OF WARRANTIES AND LIMITATION OF LIABILITIES

NEITHER EPRI, ANY MEMBER OF EPRI, ANY COSPONSOR, NOR ANY PERSON OR ORGANIZATION ACTING ON BEHALF OF ANY OF THEM:

(A) MAKES ANY WARRANTY OR REPRESENTATION WHATSOEVER, EXPRESS OR IMPLIED, (I) WITH RESPECT TO THE USE OF ANY INFORMATION, APPARATUS, METHOD, PROCESS OR SIMILAR ITEM DISCLOSED IN THIS PACKAGE, INCLUDING MERCHANTABILITY AND FITNESS FOR A PARTICULAR PURPOSE, OR (II) THAT SUCH USE DOES NOT INFRINGE ON OR INTERFERE WITH PRIVATELY OWNED RIGHTS, INCLUDING ANY PARTY'S INTELLECTUAL PROPERTY, OR (III) THAT THIS PACKAGE IS SUITABLE TO ANY PARTICULAR USER'S CIRCUMSTANCE; OR

(B) ASSUMES RESPONSIBILITY FOR ANY DAMAGES OR OTHER LIABILITY WHATSOEVER (INCLUDING ANY CONSEQUENTIAL DAMAGES, EVEN IF EPRI OR ANY EPRI REPRESENTATIVE HAS BEEN ADVISED OF THE POSSIBILITY OF SUCH DAMAGES) RESULTING FROM YOUR SELECTION OR USE OF THIS PACKAGE OR ANY INFORMATION, APPARATUS, METHOD, PROCESS OR SIMILAR ITEM DISCLOSED IN THIS PACKAGE.

6. EXPORT

The laws and regulations of the United States restrict the export and re-export of any portion of this package, and you agree not to export or re-export this package or any related technical data in any form without the appropriate United States and foreign government approvals.

7. CHOICE OF LAW

This agreement will be governed by the laws of the State of California as applied to transactions taking place entirely in California between California residents.

8. INTEGRATION

You have read and understand this agreement, and acknowledge that it is the final, complete and exclusive agreement between you and EPRI concerning its subject matter, superseding any prior related understanding or agreement. No waiver, variation or different terms of this agreement will be enforceable against EPRI unless EPRI gives its prior written consent, signed by an officer of EPRI.

© 2003 Electric Power Research Institute (EPRI), Inc. All rights reserved. Electric Power Research Institute and EPRI are registered service marks of the Electric Power Research Institute, Inc. EPRI. ELECTRIFY THE WORLD is a service mark of the Electric Power Research Institute, Inc.

Printed on recycled paper in the United States of America

1004324

EPRI • 3412 Hillview Avenue, Palo Alto, California 94304 • PO Box 10412, Palo Alto, California 94303 • USA
800.313.3774 • 650.855.2121 • askepri@epri.com • www.epri.com