ELECTRIC POWER RESEARCH INSTITUTE

Mitigation of Geomagnetically Induced Currents in Transformers

Technical Report

Mitigation of Geomagnetically Induced Currents in Transformers

1012352

Final Report, December 2006

EPRI Project Manager
L. van der Zel

ELECTRIC POWER RESEARCH INSTITUTE
3420 Hillview Avenue, Palo Alto, California 94304-1338 • PO Box 10412, Palo Alto, California 94303-0813 • USA
800.313.3774 • 650.855.2121 • askepri@epri.com ◘ www.epri.com

DISCLAIMER OF WARRANTIES AND LIMITATION OF LIABILITIES

THIS DOCUMENT WAS PREPARED BY THE ORGANIZATION(S) NAMED BELOW AS AN ACCOUNT OF WORK SPONSORED OR COSPONSORED BY THE ELECTRIC POWER RESEARCH INSTITUTE, INC. (EPRI). NEITHER EPRI, ANY MEMBER OF EPRI, ANY COSPONSOR, THE ORGANIZATION(S) BELOW, NOR ANY PERSON ACTING ON BEHALF OF ANY OF THEM:

(A) MAKES ANY WARRANTY OR REPRESENTATION WHATSOEVER, EXPRESS OR IMPLIED, (I) WITH RESPECT TO THE USE OF ANY INFORMATION, APPARATUS, METHOD, PROCESS, OR SIMILAR ITEM DISCLOSED IN THIS DOCUMENT, INCLUDING MERCHANTABILITY AND FITNESS FOR A PARTICULAR PURPOSE, OR (II) THAT SUCH USE DOES NOT INFRINGE ON OR INTERFERE WITH PRIVATELY OWNED RIGHTS, INCLUDING ANY PARTY'S INTELLECTUAL PROPERTY, OR (III) THAT THIS DOCUMENT IS SUITABLE TO ANY PARTICULAR USER'S CIRCUMSTANCE; OR

(B) ASSUMES RESPONSIBILITY FOR ANY DAMAGES OR OTHER LIABILITY WHATSOEVER (INCLUDING ANY CONSEQUENTIAL DAMAGES, EVEN IF EPRI OR ANY EPRI REPRESENTATIVE HAS BEEN ADVISED OF THE POSSIBILITY OF SUCH DAMAGES) RESULTING FROM YOUR SELECTION OR USE OF THIS DOCUMENT OR ANY INFORMATION, APPARATUS, METHOD, PROCESS, OR SIMILAR ITEM DISCLOSED IN THIS DOCUMENT.

ORGANIZATION(S) THAT PREPARED THIS DOCUMENT

Electric Research & Management, Inc.

NOTE

For further information about EPRI, call the EPRI Customer Assistance Center at 800.313.3774 or e-mail askepri@epri.com.

Electric Power Research Institute and EPRI are registered service marks of the Electric Power Research Institute, Inc.

Copyright © 2006 Electric Power Research Institute, Inc. All rights reserved.

CITATIONS

This report was prepared by

Electric Research & Management, Inc.
1211 Cornplanter Road
Cabot, PA 16023

Principal Investigator
D. Fugate

This report describes research sponsored by the Electric Power Research Institute (EPRI).

The report is a corporate document that should be cited in the literature in the following manner:

Mitigation of Geomagnetically Induced Currents in Transformers. EPRI, Palo Alto, CA: 2006. 1012352.

PRODUCT DESCRIPTION

Solar storms directed at the earth often produce changes in the geomagnetic field through a complex process of events that starts at the sun and ends at the earth. These solar magnetic disturbances (SMDs) induce slowly varying electric fields at the earth's surface that cause currents known as *geomagnetically induced currents* (GICs) to flow in the earth and on man-made conducting paths, such as transmission lines and natural gas pipelines. GICs can damage equipment and disrupt proper operation of the electric grid. In the extreme, a large solar storm has the potential to damage transformers that are critical components of the bulk transmission system and cause a large outage.

GICs and their impact on power equipment and operation of the grid have been studied for some time, especially since the solar storm that occurred in March 1989, causing a large blackout on the Hydro-Québec system and other significant impacts to the United States, including transformer failures. A large amount of information on GICs is available in the technical literature. The objective of this report is to provide an overview of approaches to mitigate the effects of GICs on transformers and the negative impact of GICs to the power grid.

Results and Findings

This report summarizes the three main approaches to dealing with GICs and discusses the advantages and disadvantages of each approach. This overview provides the framework for evaluating the vulnerability of existing equipment, suggestions for specifying transformers, options for blocking GICs, and possible approaches to operating during significant SMDs that minimize the impact to the grid, enhance system reliability, and reduce the risk of large outages.

Challenges and Objectives

This report is useful to transmission system managers, operators, and transmission engineers because it provides an overview of GIC issues and approaches to mitigating GICs and their impact to the grid.

Applications, Value, and Use

This report serves as a starting point for determining what additional information is required for utilities to harden their systems to GICs, to specify new transformers that are less vulnerable to GICs, and to help in refining operating procedures for SMDs. EPRI is also preparing to help the National Aeronautics and Space Administration (NASA) in the development of a solar storm forecasting system by providing GIC data for testing the system. The GIC data were recorded on the SUNBURST network during solar storms that occurred at the peak of the most recent solar cycle.

EPRI Perspective

The large solar storm in March 1989 and the resulting impacts to the power grid, specifically the large outage on the Hydro-Québec system and transformer failures in the United States, were a warning that the issues associated with GICs were important for reliable operation of the bulk transmission system. EPRI organized a conference in 1990 and started the SUNBURST project for monitoring and understanding GICs in 1991. In 2000, the SUNBURST monitoring network was upgraded to a nearly real-time system that provides the ability to view monitored GIC information through the Web during a solar storm. In addition, the network was upgraded to provide automated alerts to system operators as a storm progresses. In 2004, EPRI organized a transformer design workshop to address the issue of transformers and their vulnerability to GICs. Based on the experience from the SUNBURST project and the presentations at the 2004 transformer workshop, EPRI is in the position to provide guidance on what utilities can do to address and mitigate the impact of GICs.

Approach

The basic approach for developing this report was to collect information on GIC impacts, transformer design, and operating guidelines and to summarize this information in a single report that can be used by key personnel in the electric utility industry to quickly gain an understanding of the issues associated with GICs and to understand the basic approaches to dealing with these issues.

Keywords

Geomagnetically induced current (GIC)
Half-cycle saturation
Solar magnetic disturbance (SMD)
Transformer

ABSTRACT

During solar storms, large masses of charged particles are ejected into space from the sun. These charged particles reach the earth several days later, interacting with and shifting the earth's magnetic field, which in turn induces large currents that circulate in the earth. These currents, called *geomagnetically induced currents* (GICs), can enter a power system and flow through transformer ground connections, disrupting or damaging equipment.

This report provides an overview of various approaches to dealing with GICs. This overview presents the framework for evaluating the vulnerability of existing equipment, suggestions for specifying transformers, options for blocking GICs, and possible approaches to operating during significant solar magnetic disturbances to minimize the impact to the grid, enhance system reliability, and reduce the risk of large outages. This report also serves as an identifier of areas that could be explored or researched in further detail to provide valuable information for mitigating GICs or reducing their impact on the grid.

CONTENTS

1 INTRODUCTION 1-1

What Causes GICs? 1-2

GICs on the Grid 1-2

2 TRANSFORMER HALF-CYCLE SATURATION 2-1

Negative Impacts of Saturation 2-3

3 GIC MITIGATION APPROACHES 3-1

Blocking GIC Paths 3-1

Blocking Capacitors 3-2

Ground Resistor 3-4

4 OPERATING WITH GICS 4-1

Evaluation of Equipment Susceptibility 4-2

Transformer Evaluation 4-2

Capacitor Bank Evaluation 4-3

Static VAR Evaluation 4-3

Generator Evaluation 4-4

System Evaluation 4-4

Forecasting and GIC Monitoring 4-4

5 SUMMARY 5-1

Before a Storm: Preparation 5-1

During a Storm: Operation 5-2

After a Storm: Analysis 5-2

6 REFERENCES 6-1

LIST OF FIGURES

Figure 1-1 Schematic Showing the Conducting Path for GICs Due to Grounded Wye Connections at Both Ends of a Transmission Line 1-3
Figure 1-2 Time Plot Showing the Start of GIC Activity During the “Halloween Storm” of 2003 1-4
Figure 1-3 Time Plot Showing 12 Hours of GIC Data Recorded on a Transformer Neutral During the “Halloween Storm” of 2003 1-4
Figure 2-1 Single-Phase Shell or Core-Form Transformers 2-1
Figure 2-2 Three-Leg, Three-Phase, Core-Form Transformer 2-2
Figure 2-3 Seven-Leg, Shell-Form Transformer 2-2
Figure 2-4 Conventional Three-Phase, Shell-Form Transformer 2-3
Figure 2-5 Five-Leg, Core-Form Transformer Configuration 2-3
Figure 3-1 Schematic Showing That GICs Have No Path If One End Is Delta-Connected at the Transformer 3-2
Figure 3-2 Series Compensation (Capacitors) Interrupts the GIC Path on the Transmission Line 3-3
Figure 3-3 Blocking Capacitor Inserted in the Neutral Ground Connection Blocks GICs 3-3

1
INTRODUCTION

Solar storms result in masses of charged particles being ejected toward the earth. After reaching the earth in one to four days, these charged particles interact with the ionosphere and magnetosphere systems of the earth in a complex process, causing changes in the geomagnetic field that, in turn, induce electric fields at the earth's surface. These electric fields drive large currents known as *geomagnetically induced currents* (GICs) that flow in the earth and on man-made conducting paths, such as transmission lines and metallic pipelines. In short, a solar magnetic disturbance (SMD) produces GICs. These quasi-direct-current (quasi-dc) currents enter and exit the power system at transformer grounds, disrupting the normal operation of the power system and, in some cases, damaging equipment.

The impact of GICs on the grid is predominantly due to offset saturation in transformers. GICs flow onto a ground connection, through transformer windings, along the transmission line phase conductors, and then back to the ground through another transformer's ground connection. When GIC flows through a transformer winding, it can cause a dc flux offset in the transformer core that causes saturation in each half of a power cycle. This saturation produces even harmonics (second, fourth, sixth), transformer heating, and volt-ampere-reactive (VAR) consumption (the transformer becomes a larger reactive load). The resulting impacts include the following:

- The harmonics can cause misoperation of relays—capacitor bank trips are most common—and harmonics can cause heating in the end-turn region of generators.
- Localized heating of the transformer can cause damage, premature aging, or even failure. The worst-case SMD scenario is a large storm that causes multiple transformer failures, leading to a large (and possibly long-term) outage of the bulk transmission system.
- VAR consumption during an SMD places additional constraints on the operation of the grid. It can ultimately lead to voltage depression and tripping of lines if sufficient VAR support is not available.

"Shielding Grids from Solar Storms" [1] provides an introduction to GICs. The current report provides a high-level overview of the issues associated with GICs and possible approaches to mitigation of GICs. The objective is to present a basic framework for utilities that want to address the negative impacts associated with GICs.

What Causes GICs?

SMDs start with the sun. Scientists talk about solar coronal holes and coronal mass ejections (CMEs) as being the two main categories of solar activity that drive SMDs at the earth. CMEs involve the ejection of a large mass of charged particles that escape from the sun's halo (corona), traveling to the earth in one to four days. At the earth, charged particles from a CME interact with the earth's magnetosphere-ionosphere system, producing ionospheric currents that vary with both position and time. Magnetic fields associated with these currents perturb the earth's geomagnetic field, inducing electric fields at the earth's surface and causing GICs to flow.

A wide array of educational materials is provided at the National Oceanographic and Atmospheric Administration (NOAA) web site for the Space Environment Center (SEC), www.sec.noaa.gov. According to the SEC, a summary of the chain of events that causes GICs is:

1. A CME occurs at the sun.
2. The mass of charged particles travels to the earth in one to four days.
3. At the earth, this mass of charged particles interacts with the earth's magnetosphere-ionosphere system, producing varying electrojet currents above the earth.
4. Electrojet currents above the earth produce changes in the geomagnetic field.
5. The changing geomagnetic field (dB/dt) induces electric fields at the earth's surface.
6. The electric field at the earth's surface drives GICs.

GICs on the Grid

GICs flow in the earth's crust, but transmission lines represent a parallel conductive path when transformers are wye-grounded at both ends, as shown schematically in Figure 1-1. Because we are used to thinking about 60-Hz impedances, it is at first counterintuitive to think of GICs flowing from the earth onto the ground connection, through the windings, and onto a transmission line. However, the transformer winding is a simple resistance at dc, and GICs are quasi-dc, that is, very slow transients with a time scale that varies from tens of seconds to minutes.

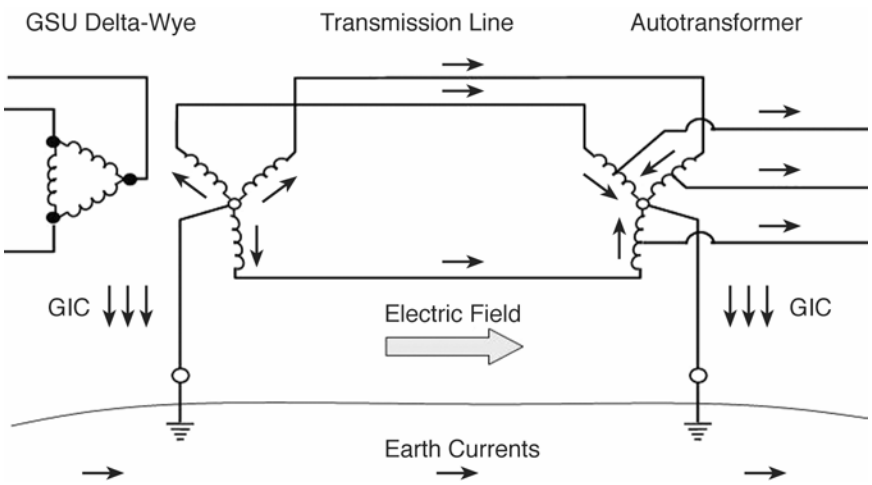

Figure 1-1
Schematic Showing the Conducting Path for GICs Due to Grounded Wye Connections at Both Ends of a Transmission Line

For GICs to flow on a transmission line, both sides of the transmission line must be connected to grounded transformers (typically, a wye connection with neutral ground at each end). Figure 1-1 shows a schematic of GICs flowing onto the ground connection of a delta-wye connected transformer at the left, through all three windings, and onto the transmission line. At the wye connection, GIC essentially splits into three equal parts as it flows onto the phase conductors.

Moving from left to right in Figure 1-1, the transmission line ends at a bank of single-phase wye-connected autotransformers, where a portion of the GIC flows back into the earth through the ground connection and a portion continues on the transmission line connected to the low side of the autotransformer. Due to the common winding in an autotransformer, the GIC measured on the common ground connection (neutral) is not necessarily the total GIC passing through the transformer windings.

Figure 1-1 illustrates that with a delta-wye-connected transformer (or bank of three single-phase transformers connected in a delta-wye configuration), all GICs flow onto or off the transformer through the ground connection. Thus, the GICs flowing through the transformer can be measured with a single dc current sensor on the ground connection. With an autotransformer, due to the common winding, GICs can flow through the transformer from the high side to low side or vice versa, as long as the ends of both transmission lines are wye-grounded. Figures 1-2 and 1-3 are time plots showing measured GIC during a solar storm that occurred at the end of October 2003.

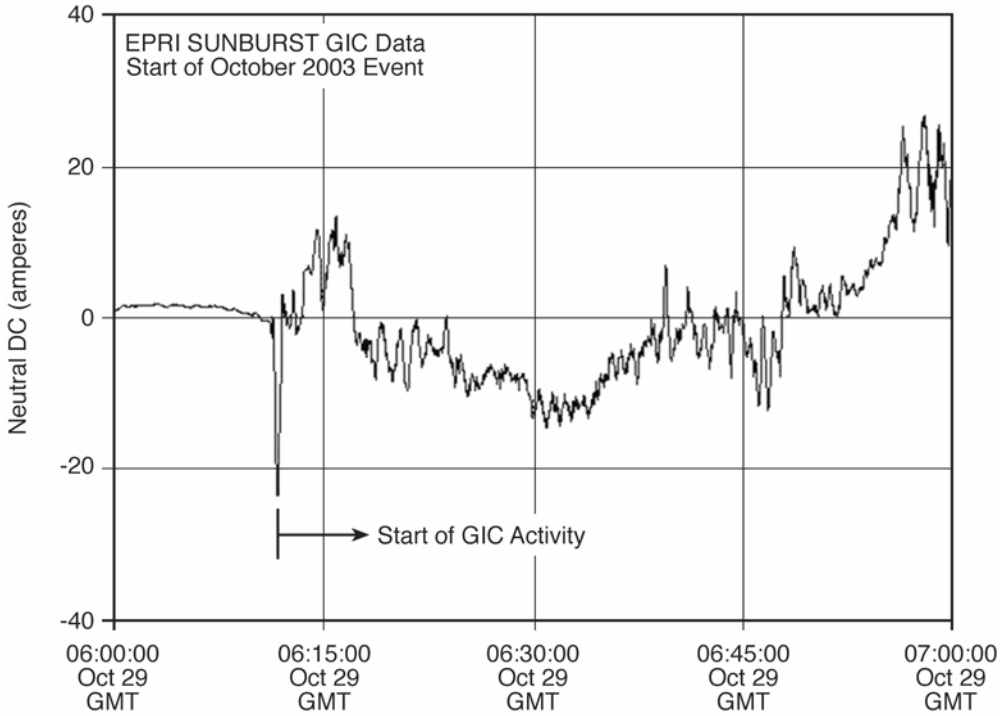

Figure 1-2
Time Plot Showing the Start of GIC Activity During the "Halloween Storm" of 2003

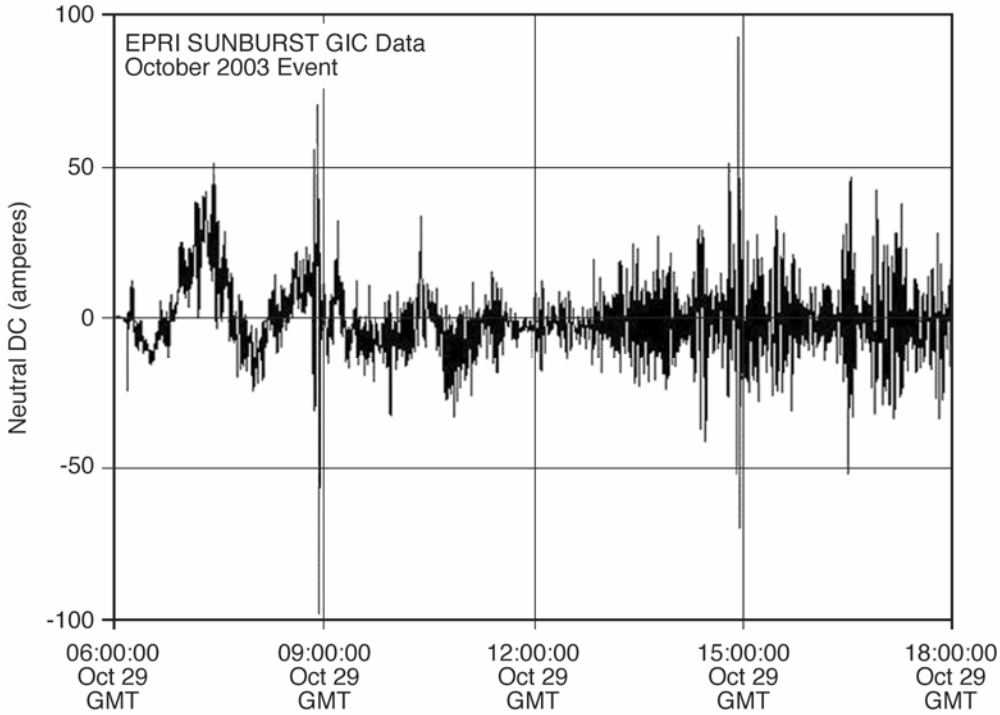

Figure 1-3
Time Plot Showing 12 Hours of GIC Data Recorded on a Transformer Neutral During the "Halloween Storm" of 2003

These data show that the GIC phenomenon is transient, albeit quite slow, with time scales on the order of tens of seconds to minutes. The plots also show that the peak GIC levels can swing dramatically from a peak in one direction to a peak in the opposite direction within tens of seconds.

From a dc circuit standpoint, the magnitude of GIC that flows is the voltage between the two transformer ground points divided by the total resistance. The voltage that drives GICs, also known as the *earth surface potential* (ESP), is the integral of the electric field in the direction of the transmission line along the entire path of the transmission line. Thus, the electric field direction and the topology of the grid are involved in determining how much GIC flows. With a large interconnected transmission system, the way GICs flow becomes a network problem—one cannot consider each transmission line independently. During a solar storm, the electric field is continuously changing, and hence, not only does the GIC magnitude change continuously, but the direction will change as well. This changing magnitude and direction of GIC is visible in Figures 1-2 and 1-3.

The overall resistance between the ground connections is the sum of the grounding resistance at both ends, the winding resistances in each of the transformers, and the transmission line resistance. Because all three phases represent a parallel path, the transmission line resistance is one-third of the phase conductor resistance. On the transmission line, the phases are typically characterized by a resistance per unit length.

For a short transmission line, the total resistance of the GIC path is typically dominated by the winding and ground resistances of the transformers. When the line is short, there might be little voltage difference at the ends.

With a long transmission line, the resistance of the phase conductors becomes the dominant resistance, and the voltage difference at the ends might be significant. For example, a 62-mile (100-km) transmission line running in the direction of a 1-volt-per-kilometer (1-V/km) electric field would have a 100-V difference at the ends to drive GIC. The maximum GIC that can flow on a long line is the electric field strength in the direction of the line divided by the total resistance per kilometer of all three phases. Of course, the electric field is changing continuously in both magnitude and direction during an SMD. Electric field magnitudes during a GIC event might range from 1 to 6 V/km.

The earth's geology plays a significant role in the magnitude of GICs. ESPs are largest where the earth's conductivity is lowest, typically regions dominated by igneous rock. GIC flow can also be impacted by large bodies of water and the earth's conductivity at the water boundaries.

To summarize, GICs are quasi-dc (that is, slow transients with time constants on the order of tens of seconds or minutes) that flow on any parallel conducting paths connected to earth. The currents are driven by the earth's surface electric field and typically change direction during the peak of a storm. Depending on a transformer's construction, GICs flowing through the windings can cause half-cycle saturation of the transformer core. The next section describes half-cycle saturation.

2
TRANSFORMER HALF-CYCLE SATURATION

At the most basic level, a transformer consists of primary and secondary windings coupled through a magnetic core. Currents flowing in the windings produce alternating flux in the transformer core, and this time-varying flux provides the coupling between windings that results in the transformer action—stepping voltage up or down, depending on the turns ratio.

When GICs flow through the transformer windings as described in Section 1, the GICs set up a flux offset in the core that can result in half-cycle saturation. With sufficient offset, the crests of the flux waveform can exceed the saturation level of the ferromagnetic core material. The ease with which this saturation occurs depends on the relationship of the magnetic flux density to the magnetic field strength (the *B-H characteristic*) of the core material and more importantly, the transformer's core-winding construction. "Characteristics of Transformer Exciting-Current During Geomagnetic Disturbances" [2] provides a more detailed description of half-cycle saturation.

Single-phase transformers are the most vulnerable to saturation because the dc flux has a low reluctance path through the core, as shown in Figure 2-1. Thus, saturation can occur for relatively low levels of GIC.

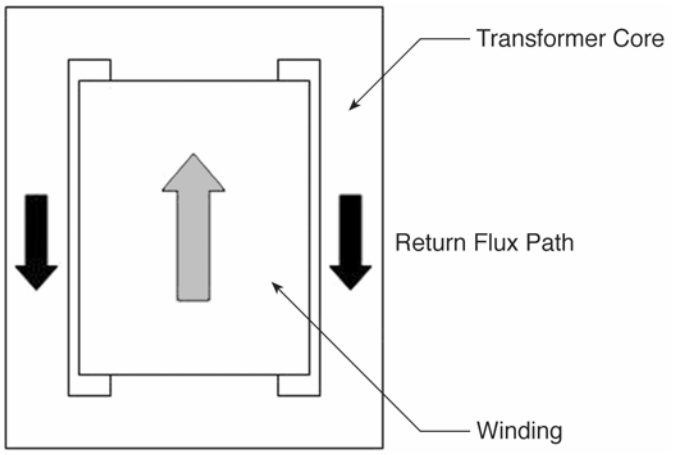

Figure 2-1
Single-Phase Shell or Core-Form Transformers (These transformers are the most susceptible to saturation from GICs due to the low reluctance return path for dc flux.)

The transformer type that is the least susceptible to half-cycle saturation from GIC is the three-leg, core-form transformer, as shown in Figure 2-2. With equal GIC on each phase winding, all the dc flux is in the same direction, and there is no low reluctance return path in the core—the flux must return in air. Hence, it takes a larger GIC magnitude to saturate the core in the winding area for this type of transformer construction.

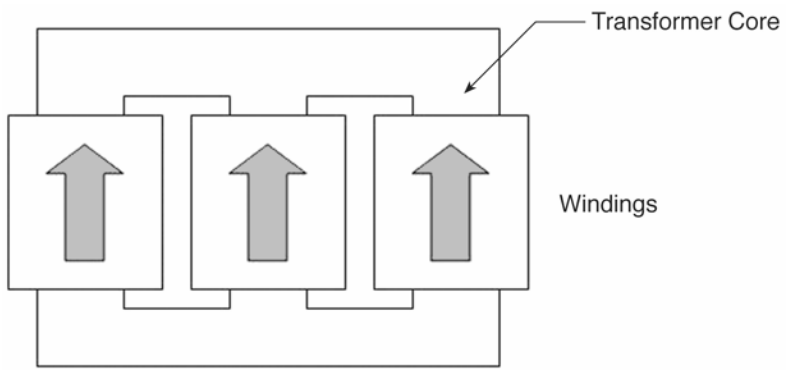

Figure 2-2
Three-Leg, Three-Phase, Core-Form Transformer (This type is the least susceptible to saturation from GICs because there is no low reluctance return path for dc flux.)

Depending on the return flux paths provided by the core construction, other transformer types fall somewhere between the single-phase transformer and the three-leg, three-phase, core-form transformer in terms of vulnerability to GIC caused by half-cycle saturation. In order of decreasing susceptibility to saturation are the seven-leg shell-form, the three-phase conventional, and the five-leg core-form (all of these are three-phase transformers). These basic core types are shown in Figures 2-3 through 2-5.

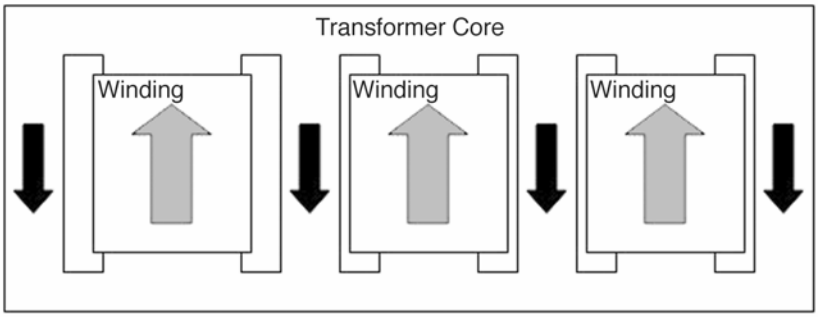

Figure 2-3
Seven-Leg, Shell-Form Transformer (This is the most vulnerable of the three-phase transformer types to half-cycle saturation caused by GICs.)

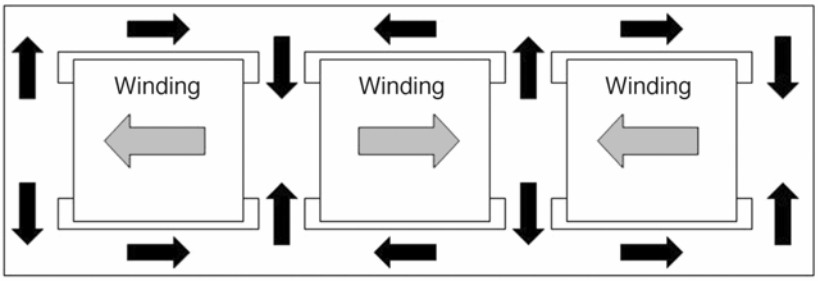

Figure 2-4
Conventional Three-Phase, Shell-Form Transformer (This has some vulnerability to half-cycle saturation caused by GICs.)

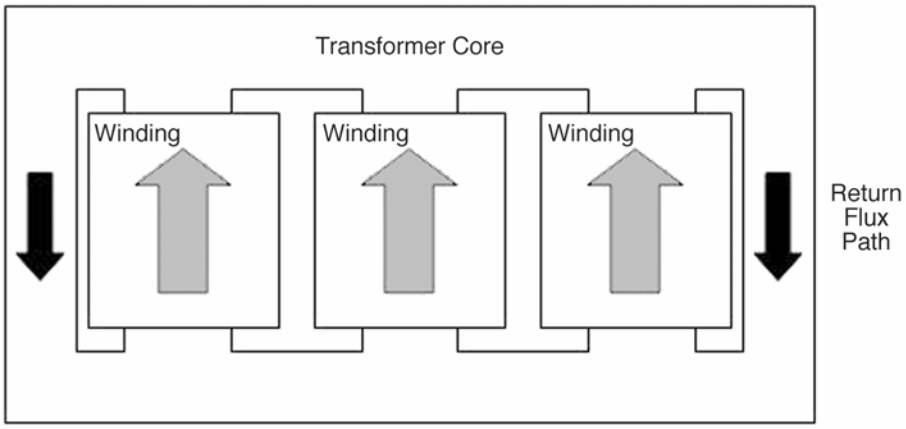

Figure 2-5
Five-Leg, Core-Form Transformer Configuration (The vulnerability of this design lies between that of the three-leg core form transformer and the conventional three-phase, shell-form transformer.)

In a bank of single-phase transformers, saturation occurs one phase at a time. Saturation effects are more complicated in three-phase transformers due to the common flux paths shared by the phases. For certain three-phase core types, it is possible for the individual phase waveforms to be distorted differently.

Negative Impacts of Saturation

When half-cycle saturation occurs in a transformer, there are three main negative impacts: harmonics, fringing fields, and VAR consumption.

- Harmonics. The nonlinear effect of saturation on each half-cycle produces even harmonics (second, fourth, sixth). These harmonics can cause misoperation of relays, overloading of capacitor banks, and heating in generators.

- Fringing fields. During saturation, magnetic flux extends out beyond the core into parts of the transformer where flux would normally be negligible. The fringing fields can produce eddy current heating and magnetization losses, potentially causing localized hot spots in a transformer. The localized heating can cause damage to insulation, windings, leads, bracing, and tank walls. The heating can also cause gassing of the transformer oil. At a minimum, the localized heating causes premature aging of the transformer, and at worst, failure of the transformer. Transformer damage, in many cases, is not attributed to GICs, because the failure is delayed significantly from the solar storm.
- VAR consumption. Half-cycle saturation changes the impedance of the transformer as a load on the transmission system. When the core saturates, a large increase in reactive power is required to sustain the operating level of flux, and the exciting current of the transformer becomes very large. During a solar storm, this increase in reactive loading can lead to voltage depression and, in the worst-case scenario, tripping of transmission lines.

From EPRI's SUNBURST monitoring of transformer GIC during solar events, data show that there can be a delay from the start of GIC to the harmonic effects that are produced by half-cycle saturation. In a grounded-wye delta transformer, any change in GIC tends to induce an equal and opposite current circulating in the delta due to the common mode, or zero-sequence, nature of GIC. A transformer core is saturated by flux, which is the time-integral of voltage. Due to the very low resistance of the delta winding in a large grounded-wye delta transformer, such as a generator step-up transformer (GSU), the dc voltage is small. Consequently, the flux offset integrates slowly, delaying the onset of saturation. This phenomenon is much less significant in transformers with delta tertiaries because these windings are typically designed for reduced rating without a high emphasis on load loss, thus increasing resistance and accelerating the growth of flux offset during the flow of GIC.

Generally, measured dc neutral current and the key indicators of saturation, even harmonics and changes in transformer VARs, go hand-in-hand. Monitoring of dc neutral current gives a direct measure of GIC (except in the case of autotransformers), but utilities should also monitor the impact of GICs by measuring at least the second harmonic of one phase on each side of a transformer; an even better method is to measure all phase currents and voltages with sufficient phase accuracy to calculate real and reactive power (VARs) for the transformer. Not only does this level of monitoring provide a view of the GIC impact during an SMD, but it also provides information on transformer vulnerability. For example, it tells us at what level of GIC saturation starts, whether the transformer is being heated, what the transformer VAR consumption is as a function of GIC, and what level of harmonics is created as a function of GIC.

3
GIC MITIGATION APPROACHES

Due to transformer saturation and the resulting effects described in the previous section, GICs negatively affect the grid from both a reliability standpoint and a cost standpoint. Reliability is at risk because GICs can damage equipment, cause misoperation of protection, and depress system voltages. At the bulk transmission level, costs associated with an outage and the costs associated with equipment damage are very large. Three general approaches to dealing with GICs are to block them, to use or install equipment that is not affected by GICs, and to operate the grid in a way that minimizes the impact of GICs. This section describes blocking GICs and specifying transformers. Operating with GICs is discussed in Section 4.

Blocking GIC Paths

Although not necessarily always practical based on system considerations, the most fundamental approach is to block the path of GICs. This would involve eliminating one of the two neutral ground connections at either end of a transmission line, inserting series compensation on the connected transmission lines, or using a blocking capacitor in the neutral ground connection. With any of these options, GICs cannot flow through the transformer windings, and the problems caused by half-cycle saturation—harmonics, heating, and VAR consumption—are eliminated. Implementation of any blocking solution should be accompanied by a system study, because elimination of GICs on one transmission line can significantly change the GIC impact to other parts of the system (GICs should be viewed as a network problem).

Figure 3-1 shows a transmission line that is wye-connected at the left and delta-connected at the right. Because the transmission line is grounded at only one end, there is no path for GICs to flow through. The biggest difficulty with this approach is that single-phase autotransformers are the transformer of choice for bulk transmission at high voltages due to their high efficiency and low construction cost (with the shared winding). Autotransformers are nearly always neutral-grounded to limit over-voltage problems. Thus, not only do they provide a ground connection for GICs, but they also provide a through-path for GICs to flow from the high-side transmission line to the low-side transmission line or vice versa.

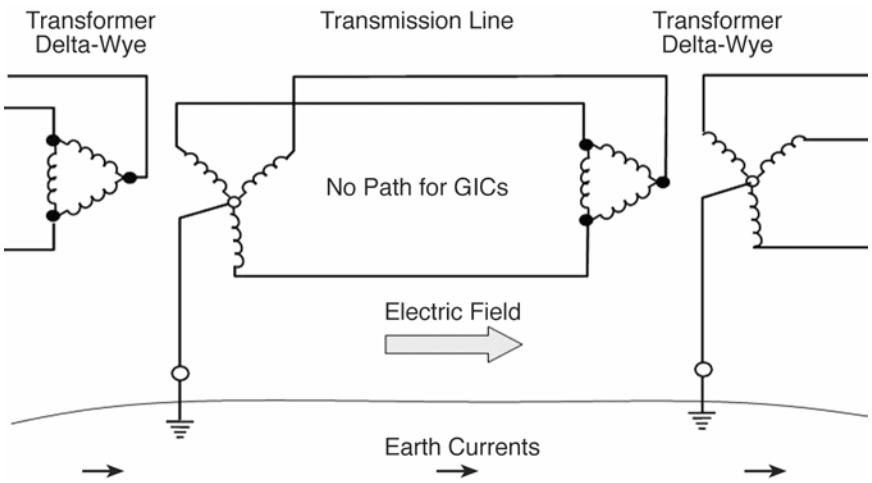

Figure 3-1
Schematic Showing That GICs Have No Path If One End Is Delta-Connected at the Transformer

Even if autotransformers are not used, a topology for connecting a transmission line in the manner shown in Figure 3-1—wye-connected on one side, delta-connected on the other side—is not always possible or practical based on system considerations. For example, a delta-wye connection introduces a phase shift, and the transformer connections must be made according to standard design to keep phasing consistent between the different voltages on the system (for interconnections).

Blocking Capacitors

Because GICs are quasi-dc, capacitors are essentially an open circuit. Thus, two other blocking approaches involve the use of capacitors, as shown in Figures 3-2 and 3-3. In Figure 3-2, series compensation (capacitors) on the center transmission line phases blocks the flow of GICs. In Figure 3-2, GICs are still shown flowing onto the autotransformer at the right and continuing on the transmission line to the right. In the United States, series capacitive compensation is, in general, almost non-existent in the East but fairly common in the West, where the compensation is used to lower the impedance of very long lines (generation is distance from load centers). For series capacitors, the main issues are line impedance, load impedance, and system stability (due to resonance).

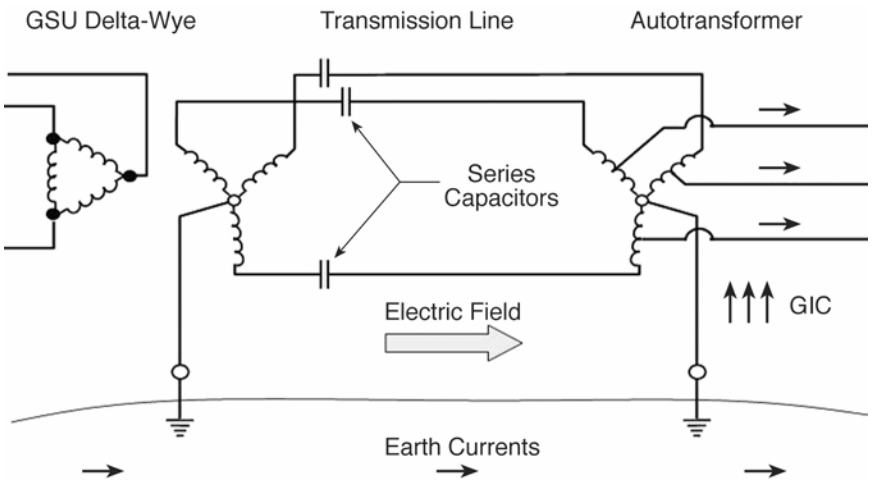

Figure 3-2
Series Compensation (Capacitors) Interrupts the GIC Path on the Transmission Line

In Figure 3-3, a blocking capacitor is applied to the neutral ground connection of a transformer. Note that the blocking capacitor is required only at one end of the transmission line to block GICs on that line. Again, however, GICs must be considered at the system level.

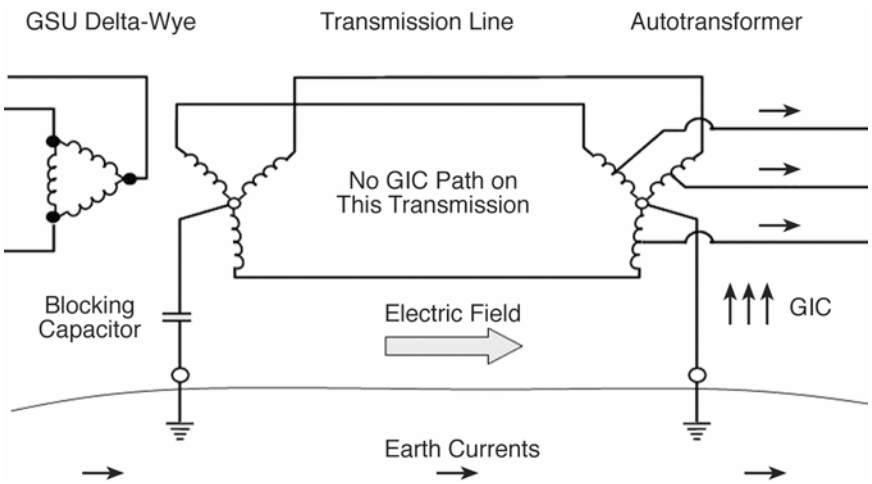

Figure 3-3
Blocking Capacitor Inserted in the Neutral Ground Connection Blocks GICs

The blocking capacitor concept has been investigated, and the main issue was cost. With the implementation of a blocking capacitor, some means (for example, surge arresters or arc gaps) must be provided to allow large fault currents to flow. Including the means for large fault currents to flow would eliminate concerns of any sustained negative influence on the system and allow relaying to occur. Additional concerns about relaying could be addressed by inserting the blocking capacitor only during solar storms.

Ground Resistor

One additional approach that reduces GICs is the use of a resistance in the ground connection (at the same location as the capacitor in Figure 3-3). The reduction in GIC levels will depend on the resistances—ground resistance, transformer winding resistances, and transmission line phase resistance—for the specific situation in which it is applied. The issues associated with this approach are identical to all of the issues that come with resistance grounding—selecting a ground resistance value based on fault current and relaying requirements. At first glance, this method would appear practical for large storms in the sense that it might mean the difference between slight damage and total failure during a major GIC event. However, the benefits of this approach are possibly reduced for large storms because transformer saturation is a nonlinear phenomenon; that is, in the extreme case, anything short of totally blocking GICs might not prevent transformer damage or failure.

Specifying New Transformers

Assuming that GICs are an issue and that blocking approaches are not practical or too costly, the next best approach is to use equipment that is less susceptible to GICs. In other words, live with GICs on the system during solar storms, but use equipment that is not affected by the GICs.

Because half-cycle saturation in transformers is the dominant source of negative impacts to the grid, EPRI project manager Ben Damsky organized a transformer design workshop as part of the annual EPRI SUNBURST project meeting in 2004. The objective of the workshop was to discuss possible design modifications that would make a transformer less susceptible to negative impacts from GICs. The contributions from experts on the subject who were invited to give presentations are summarized here:

- *Dr. Gert Coetzee of ESKOM (South African electric utility)*. Dr. Coetzee gave a presentation showing gas-in-oil readings that appeared to be correlated with solar storms. He showed other transformer damage: melted low-voltage exit leads, overheated bracing, color change on paper insulation, overheated tap changer connection points, and a high-voltage winding failure. The questions raised were: How to specify and design GIC-resistant transformers? How much GIC—damage that causes aging and premature failure—goes undetected? Does GIC accelerate transformer failure at weak points or partially damaged locations?
- *Dr. Ramsis Girgis of ABB (transformer manufacturer)*. Dr. Girgis described how GIC can cause overheating in power transformers. He also described the failure of one large shell-form transformer of an old design, PSEG Salem nuclear, which failed in the March 1989 storm. Dr. Girgis also gave an overview of the different types of transformer core constructions and described why different core types have more or less vulnerability to GICs and half-cycle saturation. He presented information on how a transformer should be designed to avoid the damaging effects of high GICs. He stated that, because of its short duration and its typically low to moderate magnitudes, GIC should not result in high hot spot temperatures or damaging effects. Finally, he warned that the failure of the Salem unit should not be taken as a measure of the typical effect of GIC on power transformers, especially the new designs in the past 20+ years.

- *Mr. John Kappenman of Metatech (space weather forecasting)*. Mr. Kappenman provided an overview of the grid's increasing vulnerability to GICs: a) 97% of transformers are single phase at 500 kV and 765 kV; b) megavolt amperes reactive (MVAR) consumption is larger on a per-ampere GIC basis for these larger transformers; c) winding resistance is lower in the larger transformers; and d) transmission line resistance per unit length decreases with increasing line voltage. Single-phase transformers show a large increase in peak current during saturation. Approximately 10% of the increase in transformer real power losses during GIC half-cycle saturation is due to winding losses (I^2R); the other 90% is due to tank and core losses from fringing fields. The integral of GIC exposure (ampere-minutes) can be a useful indicator of aging. Temperature sensors are often close to the core and coil assembly, but heating from GIC is often beyond these locations in the transformer due to fringing flux. Magnetic-thermal analysis of fringing fields on transformer structures is useful for identifying design problems. Finally, Mr. Kappenman showed examples of heating in specific locations from magnetic-thermal analysis, including heating in a core bolt.
- *Mr. Reigh Walling of GE (transformer manufacturer)*. Mr. Walling gave a summary description of transformer offset saturation caused by GIC. Transformer core topology is the most important feature regarding susceptibility to GIC. Offset saturation from GICs creates large fundamental and harmonic exciting-current components. Very little GIC is needed to offset flux to where flux leaves the core for part of the cycle (fringing that causes eddy current heating). In the steady state, the transformer will reach a flux offset so that the exciting current has a dc component equal to the GIC magnitude. The GIC impact to a wye-delta transformer has a time lag; steady-state saturation might not occur for a period of seconds up to several minutes. Reducing the operating alternating current (ac) voltage of a transformer does **not** significantly decrease the impact of GIC saturation. Offset saturation results in substantial fundamental exciting current in phase with the flux, lagging voltage by 90˚; this current is a reactive load that tends to depress the system voltage (VAR consumption).
- *Mr. Steve Schappell of Waukesha Electric (transformer manufacturer)*. Mr. Schappell talked about transformer design features that can be implemented to reduce the impact of GICs, such as using stainless tie-plates (to avoid magnetization losses), using Nomex between windings, and not overwrapping leads to avoid heat buildup.

Based on the presentations and subsequent discussion, a summary of the main points regarding GIC and transformer design follows:

- Evidence suggests that the threat to transformers from GIC is real, as evidenced by the transformer failures in the March 1989 storm. Gas-in-oil readings from ESKOM transformers seemed to correlate with solar storms and transformer failures.
- Based on known transformer failures caused by GICs, it is certain that GICs can also cause non-fatal damage and accelerated aging that goes undetected. Early failure at a later time might be attributed to other causes (even though damage was initiated by the GICs during a solar storm).
- The impact of GICs on a transformer is design-specific. Winding-core construction plays the major role in vulnerability to GICs.

- From least susceptible to most susceptible, the core types are 1) (best) three-phase, three-leg core form; 2) three-phase shell form; 3) three-phase, five- or seven-leg core form; 4) single-phase shell form; and 5) (worst) single-phase core form.
- It is not practical to increase the core cross-section area to prevent half-cycle saturation by GICs.
- Stray flux affects transformer leads, windings, bracing, and the tank, causing hot spots that make oil flow important as well.

In short, the main considerations for specifying a new transformer are to use a winding/core configuration that is less vulnerable to GICs, as previously described, and to specify that the manufacturer perform magnetic-thermal analysis that encompasses the impact of stray flux due to various levels of dc offset. This includes stray flux and eddy currents in transformer components such as bracing, tank walls, winding leads, and so forth. Design of large transformers can vary widely, and in a competitive market, design information is often proprietary. Thus, a utility needs to work closely with the manufacturer to specify a transformer that is not easily damaged by GIC. Manufacturers believe that the most recent designs (those of the last 20 years or so) are less susceptible to GIC effects.

4
OPERATING WITH GICS

The reality is that utilities have a transmission system in place, a large interconnected network that is operating around the clock. There is a design legacy involving the selection of equipment and transformer connection methods that most likely did not consider the impact of GICs. With knowledge of the problems that solar storms have caused through the last two solar maximums (in the 11-year cycle), and considering the possible consequences of a large solar storm that would damage or cause failures in even a few large transformers, it would seem that new equipment, new protection, and new transmission lines should be specified and designed with some consideration of GICs, as discussed in the previous sections. In the meantime, utilities should determine how to operate the existing transmission system during SMDs in a manner that minimizes the chances for a large outage. This section provides an overview of possible procedures/actions that could be used to operate through a large solar storm.

A basic approach is to first evaluate equipment vulnerability and the possible system impacts due to GICs, then, based on the evaluation, to draft operating guidelines or actions to train operators to implement these operating procedures. The operating procedures and guidelines can then be refined or updated based on solar storm experience and changes to the system. An overall approach to dealing with GICs is as follows:

1. Evaluate equipment and system susceptibility. Determine where GICs can flow and which equipment is most vulnerable (transformers, VAR support, relays, generators, and so on).
2. Develop directives/specifications for new equipment and transmission lines that will minimize the effects of GICs.
3. Select a method for obtaining solar storm forecasting information. Develop and implement a GIC monitoring approach.
4. Develop operating guidelines/procedures (and training materials as required).
5. Train operators.
6. Perform post-event analysis, and refine operating procedures as required.

Evaluation of Equipment Susceptibility

An evaluation of susceptibility to GICs involves the type of equipment (for example, a single-phase autotransformer) and its location and connection to the transmission system. Transformers are clearly the most important equipment to evaluate, with large, single-phase transformers being the most vulnerable. However, capacitor banks, static VAR compensation (SVCs), relays, and generators should also be evaluated. This section provides basic guidelines to help with this evaluation.

Transformer Evaluation

The following characteristics should be reviewed to determine if a transformer is susceptible to GICs:

- Location. As a general guideline, the 35th parallel in the United States can be viewed as the southern border of GIC activity. This is based on monitored GIC storm activity from the EPRI SUNBURST network that has been recorded over the two peaks of the most recent solar cycles (1990–2005), and it is based on reported power system incidents that occurred during a solar storm. Based on these considerations, GIC impacts were noted in the northern part of North Carolina and in central California. The March 1989 storm did not appear to significantly affect systems below the 38th parallel. Of course, more extreme storms are possible, so the 35th parallel was selected as a general guideline.
- Voltage and rating. The general guideline is to consider transformers operating at 230 kV and higher, with MVA ratings of 100 MVA and greater. The criterion for selection of voltage level is based on the fact that dc resistances are typically much lower for the higher voltages and larger transformers. For example, bundled phase conductors are typically used at the higher voltages to prevent corona, and larger ground grids can be used in the switchyard, providing lower ground resistance.
- Connection topology. When considering a transformer, first look at which windings are grounded, then look to the ends of the connected lines (that are grounded) to see if either terminates in a grounded wye connection. Is the transformer solidly grounded? If series capacitors are present on a transmission line, GICs will not flow. If the transformer is a GSU, only the transmission side needs to be evaluated to see if GICs will flow. With autotransformers, both sides need to be considered.
- Core construction. From least susceptible to most susceptible, the core types are 1) (least susceptible) three-phase, three-leg core form; 2) three-phase shell form; 3) three-phase, five- or seven-leg core form; 4) single-phase shell form; and 5) (most susceptible) single-phase core form. In general, GICs are an issue for all transformer types except the three-phase, three-leg core form type that is relatively immune to half-cycle saturation (it requires very large GIC levels to saturate compared to the other types).

Capacitor Bank Evaluation

Shunt capacitor banks at voltages of 115 kV or higher should be evaluated. Shunt capacitor banks connected to an autotransformer tertiary where the autotransformer has a voltage of 230 kV or higher should also be evaluated. If the capacitor bank is connected to an autotransformer tertiary, protective relaying should be checked for harmonic restraint because transformer excitation harmonics will flow to this capacitor bank.

If the capacitor bank is switched automatically, the device must be checked to make sure that it is insensitive to harmonics, or a bypass switch should be used to prevent loss of the capacitor bank during a solar storm. The status of critical reactive equipment should be available to system operators.

Further considerations for capacitor banks are as follows:

- If the capacitor bank is ungrounded and the neutral voltage is used for protection, GICs are not a problem.
- If the capacitor bank is grounded and protected by a neutral current transformer (CT), there is the danger of losing the capacitor bank during a solar storm. The relay that uses the neutral CT current should have harmonic restraint, or a bypass switch should be installed with the capability to operate it from the control center.
- If a resistor and voltage level relay are used, the resistor might not be large enough to withstand high harmonic current levels produced by transformer saturation. The voltage level relay should be insensitive to harmonics. If the resistor is too small or the voltage relay too sensitive to harmonics, the relay system should be replaced or provisions made for a bypass switch to prevent the loss of the capacitor bank during a solar storm.

Static VAR Evaluation

SVCs located above the 35th parallel and large enough to be critical to the power system should be evaluated. Would it pose a serious threat if the SVC were tripped off-line during a solar storm? The answer to this question depends on the system connections, ratings, and operating practices.

If the SVC is immune to harmonic voltages and currents, no evaluation is required. If, however, the SVC has some sensitivity to harmonics, bypass equipment should be considered for control by system operators during a solar storm. If the SVC reaction to harmonics is unknown, the manufacturer should be involved in the evaluation. Modifications to the equipment or relay settings should be made to allow the SVC to operate during the harmonic activity produced by transformer saturation during a solar storm.

Generator Evaluation

The main criterion is whether a generator is connected to a GSU transformer that will be saturated by GICs during a solar storm. Thus, the first part of generator evaluation is actually evaluation of the GSU transformer to which it is connected, as previously described. If the generator is connected to a transformer that is susceptible to half-cycle saturation during a solar storm, the harmonics produced by the transformer can negatively affect the generator, causing localized heating that could damage the generator.

If the generator has negative sequence relays, harmonic filtering should be implemented to prevent false trips, **except** for generators with end ring and rotor bar construction. For these types of generators, relays can be used to quantify harmonic levels for determining if conditions will lead to localized end ring heating and possible damage. In these cases, relays should be set to an alarm based on rotor heating calculations [3] that predict dangerous levels of even harmonics.

System Evaluation

At a system level, fundamental questions are:

- Where will GICs flow?
- What transformers are most vulnerable?
- What additional VAR consumption will occur during any solar storm?
- Where is VAR support located?
- What generators are at risk of heating from harmonics?

An overall system evaluation can be performed with a GIC flow analysis. Based on the results of the transformer evaluations, system planners have a list of transformers where GICs can flow. A dc network model of the grounded transformers and transmission lines can be developed for evaluating how GICs will flow during different electric field conditions, including both direction and magnitude of electric fields. The electric field conditions can be based on previous solar storms and extrapolated to even larger storms. The network model requires the dc resistances of the transmission lines, transformer windings, ground resistances, and a model of earth conductivity as a function of depth. This type of study is important because it gives a view of GIC impacts at the system level. The modeling can also be extended to predict the impact of changes to the system, such as new transmission lines and new interconnections.

Forecasting and GIC Monitoring

Intelligent operation of the transmission system requires useful information regarding SMDs. Due to the complex processes involved, accurate forecasting of GICs is difficult. However, the general approach for operating is to use space weather forecasting for advance warning and to use GIC monitoring for a current view of the storm and its impact on the grid.

In the United States, the main source of space weather information is NOAA's SEC, located in Boulder, Colorado. The SEC web site can be viewed at www.sec.noaa.gov. Space weather forecasts are typically based on satellite information. Images of the sun and measurements of CMEs and other emissions from the sun provide a picture of solar activity. The SEC provides a wide range of forecast products, from weekly summaries predicting solar activity over a seven-day period to short-term warnings based on changes in the solar wind.

One measure of the potential for GIC activity is the K-index, a value used to characterize fluctuations in the earth's geomagnetic field. Specifically, the K-index is a measure of the maximum horizontal magnetic field fluctuations observed over a 3-hour period. Because GICs are caused by changes in the geomagnetic field, the K-index is a general indicator of the potential for GICs. On a larger time scale, the A-index is a daily (24-hour period) measure of average geomagnetic activity.

The SEC provides warnings based on estimates of the A- and K-indices, and these estimates can be used as the advanced warning for system operations. The SEC also provides alerts when the ground-based magnetic field measurements result in significant K-index values.

NASA is currently working on a GIC forecasting system with the goals of increased accuracy in predictions and a longer warning lead time. EPRI plans to assist NASA in the improvement and verification of the forecast system using data recorded by the EPRI SUNBURST network during major storms of the last solar cycle. It is anticipated that this forecasting system will be ready for initial testing between 2008 and 2010.

Monitoring must be implemented to provide knowledge of when GICs are occurring and more importantly, when they are impacting the grid. Direct measure of GICs can be made using a Hall-effect dc current sensor installed on transformer neutrals. The most reliable indicator of transformer saturation due to GICs is an increase in second harmonic on the phase currents and voltages. Dc neutral current and phase current second harmonics are the most basic monitoring information required. The monitoring should be implemented based on the system study, ideally at a number of critical transformers throughout the system. This monitoring information must be available to system operators.

The EPRI SUNBURST network is an example of a collaborative, nearly real-time GIC monitoring system that collects data from participating utilities and then makes the GIC data available through the Web. This GIC data can be viewed by system operators during a solar storm, and the sharing of GIC data provides a large area view of the storm (beyond a regional transmission system). Monitoring equipment alarms can be set for utility supervisory control and data acquisition (SCADA) systems, and the SUNBURST network provides automated e-mail alerts to system operators when a GIC event occurs (that is, with more than two monitoring sites recording significant GIC) on the system. Two EPRI reports [4, 5] provide descriptions of this monitoring network as well as details of additional EPRI research on GICs and their impact on the power system.

For a more comprehensive view of GIC impact on an individual transformer, phase voltages and currents should be recorded on both the high and low sides of the transformer, with sufficient phase accuracy to calculate watts and VARs during a solar storm. This information is useful for evaluating the levels of GIC at which saturation occurs and for determining how VAR consumption and transformer losses (eddy current and magnetization losses) change as a function of GIC level.

Overview of Operating Approach

Various operating procedures are also being developed under the umbrella of the North American Electric Reliability Council (NERC). (The umbrella includes regional reliability organizations.) The reader is recommended to review these region-specific procedures to complement this report.

The main issues addressed by typical operating procedures include forecast and monitoring information, communications and reporting procedures, and operator guidelines/actions:

1. Introduction. A basic description of solar storms and the impact of GICs on the power system. The introductory section is used to frame the problem and provide the rationale for the operating procedure.
2. Forecast and monitoring information. This describes the forecast information, who provides it, and how it will be communicated. For example, the K-index might be used to define the start and end of an SMD. What defines the beginning and end of a solar storm?
3. Communications and reporting procedures. This section lists communications protocols and responsibilities, such as notification of the main control center and communication with operations in bordering systems. What communications occur at the start, during, and at the end of a solar storm?
4. Operator guidelines/actions. This section is the heart of the operating procedure. Possible actions discussed in the procedures were:

    a. Assign the operator the responsibility of reviewing system status for vulnerabilities as the solar storm progresses.

    b. Maintain voltage to give margin for swings.

    c. Stop maintenance and return equipment to service. Bring additional VAR support on-line, if available.

    d. Evaluate tie-line loading and adjust interface schedule to reduce heavy interface flows.

    e. Reduce loading to 90% or less on critical interconnections, critical transmission lines, and critical facilities (including dc ties).

f. Dispatch generation to manage the system voltage, manage tie-line loading, and distribute operating reserve. Reduce loading on generators operating at full load to provide reserve for power and reactive support.

g. Prepare fast-start generation or bring spinning reserve on-line.

Additional information includes contingencies for loss of the space weather information and for the situation where conflicting information is being received about the status of the solar storm.

Several additional comments on the reviewed operating procedures are as follows:

- Space weather forecasting of GIC activity is currently not very accurate, the solar wind magnetic field from satellite data is not a good predictor of GIC activity, and peak GICs occur so rapidly—on the order of minutes—that meaningful operator actions are a real challenge. The operating procedures are necessarily vague due to the difficulties in trying to react during an SMD and the wide range of system-specific considerations. GICs can change from minor to severe in just minutes. There is very little time to react.
- In the two procedures reviewed, the basis for defining the beginning and end of a solar storm seemed to be defined mainly in terms of the K-index, which is not necessarily a good indicator of GICs. It seems that there should be more of a focus on real-time GIC monitoring.
- There was no mention of actions that would desensitize relays or insert blocking capacitors. It might be that these options are not being considered.
- Extreme conditions in which damage to transformers is imminent would require shedding load or even worse, a controlled shutdown. The controlled shutdown scenario makes a lot of sense for a massive solar storm that will damage or cause failure in multiple large transformers. In general, multiple spares or backups of large transformers do not exist due to the cost, and the lead time for replacement is easily on the order of months or longer. However, the decision to make a controlled shutdown has such massive cost implications that nearly everyone would back away from the responsibility of making that call in a timely fashion.

5
SUMMARY

There are three common approaches to mitigating the impact of GICs. First, the transmission system can be modified to exclude or limit the flow of GICs. This can be accomplished through capacitors (series compensation or a grounding capacitor), resistive grounding, or delta connections to transformers. The second approach is to design transformers that are not impacted by GIC. If a transformer does not saturate, all of the negative power system effects—harmonics, equipment damage, and VAR consumption—are avoided. The third approach is to recognize the existing vulnerabilities of the transmission system and to operate in a manner that minimizes the impact.

This section summarizes an overall approach that combines all three mitigation approaches that were discussed individually in the previous sections, dividing the planned actions for dealing with GICs into three different categories: before a storm (preparation), during a storm (operation), and after a storm (analysis).

Before a Storm: Preparation

The various evaluations and preparations that should be undertaken before a storm include the following:

- Evaluate the susceptibility of equipment. Which transformers are most vulnerable? What relaying or protection is vulnerable to harmonics characteristic of GICs? What VAR support (capacitor banks, SVCs) and generators might be impacted by GICs? These questions are answered using the guidelines for evaluation.
- Develop an approach for specifying new transformers that are less susceptible to GICs.
- Perform a system GIC analysis using a network model of the system dc resistances to determine where GICs will flow. Based on the system study, implement GIC monitoring at critical locations.
- Extend the system model to evaluate the impact of new transmission lines or connections for GIC flow.
- Consider the connection methods and GIC blocking approaches, such as series compensation, capacitor grounding, or resistive grounding.
- Develop estimates of VAR demand as a function of GICs for critical transformers.

- Perform system planning for contingency scenarios during a large solar storm. What happens if a transformer fails? What if a capacitor bank or SVC trips off-line?
- Develop operating procedure/guidelines for solar storms, and train system operators.

During a Storm: Operation

Operate according to the drafted procedure/guidelines. The data inputs, such as forecast information and GIC monitoring, must be predefined, as must how this information will be used to define when a solar storm begins and ends. Typical possible methods/actions include the following:

- Use forecasting for advance warning.
- Possibly delay scheduled maintenance.
- Consider putting equipment back in service.
- Evaluate the possibility of desensitizing protection.
- Evaluate dispatching generation to distribute reserve.
- Examine possible reductions in power transactions.
- Alert staff to expect problems and watch monitored GIC data for grid impact.
- Examine the option of inserting VAR support (such as cap banks and SVCs).
- Evaluate switching the system to maximum security and monitor line voltages carefully.
- Examine choosing a generation closer to load.
- Evaluate reducing loads on critical transformers.
- In an extreme storm, evaluate triggers and procedures to avoid major transformer damage.

After a Storm: Analysis

Perform post-event analysis. Review the impact of the storm on the grid, quantifying and investigating any misoperation. What tripped, and why? What were the levels of GIC? Were transformers damaged?

Use monitoring data to better quantify susceptibility of equipment to GICs. This means evaluating transformers to quantify the following: the GIC levels at which saturation occurs, heating in the transformer, and VAR consumption as a function of GIC.

Review operating strategy and adjust it as needed. Was forecasting and monitored GIC information available? Were communications handled properly? What actions were taken, and were they effective? Was there sufficient time to respond? What other information is needed to operate more effectively?

6
REFERENCES

1. "Shielding Grids from Solar Storms." *IEEE Spectrum*, January 2000, pp. 55–60.
2. "Characteristics of Transformer Exciting-Current During Geomagnetic Disturbances." *IEEE Transactions on Power Delivery*, Vol. 6, No. 4, October 1991, pp. 1707–1714.
3. "Rotor Heating Effects from Geomagnetic Induced Currents." *IEEE Transactions on Power Delivery*, Vol. 9, No. 2, April 1994, pp. 712–719.
4. *SUNBURST GIC Network*. EPRI, Palo Alto, CA: 1994. TR-104167.
5. *Solar Magnetic Disturbances/Geomagnetically Induced Current and Protective Relaying*. EPRI, Palo Alto, CA: 1993. TR-102621.

Export Control Restrictions

Access to and use of EPRI Intellectual Property is granted with the specific understanding and requirement that responsibility for ensuring full compliance with all applicable U.S. and foreign export laws and regulations is being undertaken by you and your company. This includes an obligation to ensure that any individual receiving access hereunder who is not a U.S. citizen or permanent U.S. resident is permitted access under applicable U.S. and foreign export laws and regulations. In the event you are uncertain whether you or your company may lawfully obtain access to this EPRI Intellectual Property, you acknowledge that it is your obligation to consult with your company's legal counsel to determine whether this access is lawful. Although EPRI may make available on a case-by-case basis an informal assessment of the applicable U.S. export classification for specific EPRI Intellectual Property, you and your company acknowledge that this assessment is solely for informational purposes and not for reliance purposes. You and your company acknowledge that it is still the obligation of you and your company to make your own assessment of the applicable U.S. export classification and ensure compliance accordingly. You and your company understand and acknowledge your obligations to make a prompt report to EPRI and the appropriate authorities regarding any access to or use of EPRI Intellectual Property hereunder that may be in violation of applicable U.S. or foreign export laws or regulations.

© 2006 Electric Power Research Institute (EPRI), Inc. All rights reserved. Electric Power Research Institute and EPRI are registered service marks of the Electric Power Research Institute, Inc.

Printed on recycled paper in the United States of America

The Electric Power Research Institute (EPRI)

The Electric Power Research Institute (EPRI), with major locations in Palo Alto, California, and Charlotte, North Carolina, was established in 1973 as an independent, nonprofit center for public interest energy and environmental research. EPRI brings together members, participants, the Institute's scientists and engineers, and other leading experts to work collaboratively on solutions to the challenges of electric power. These solutions span nearly every area of electricity generation, delivery, and use, including health, safety, and environment. EPRI's members represent over 90% of the electricity generated in the United States. International participation represents nearly 15% of EPRI's total research, development, and demonstration program.

Together...Shaping the Future of Electricity

Program:

Substations

1012352

ELECTRIC POWER RESEARCH INSTITUTE

3420 Hillview Avenue, Palo Alto, California 94304-1338 • PO Box 10412, Palo Alto, California 94303-0813 USA

800.313.3774 • 650.855.2121 • askepri@epri.com • www.epri.com