ELECTRIC POWER RESEARCH INSTITUTE

Nuclear Maintenance Applications Center: The Physical Basis of Abnormal Seal Leakoff Mitigation

Update of EPRI 1022315, Nuclear Maintenance Applications Center: Westinghouse Reactor Coolant Pump Seal Maintenance Guide

1025765

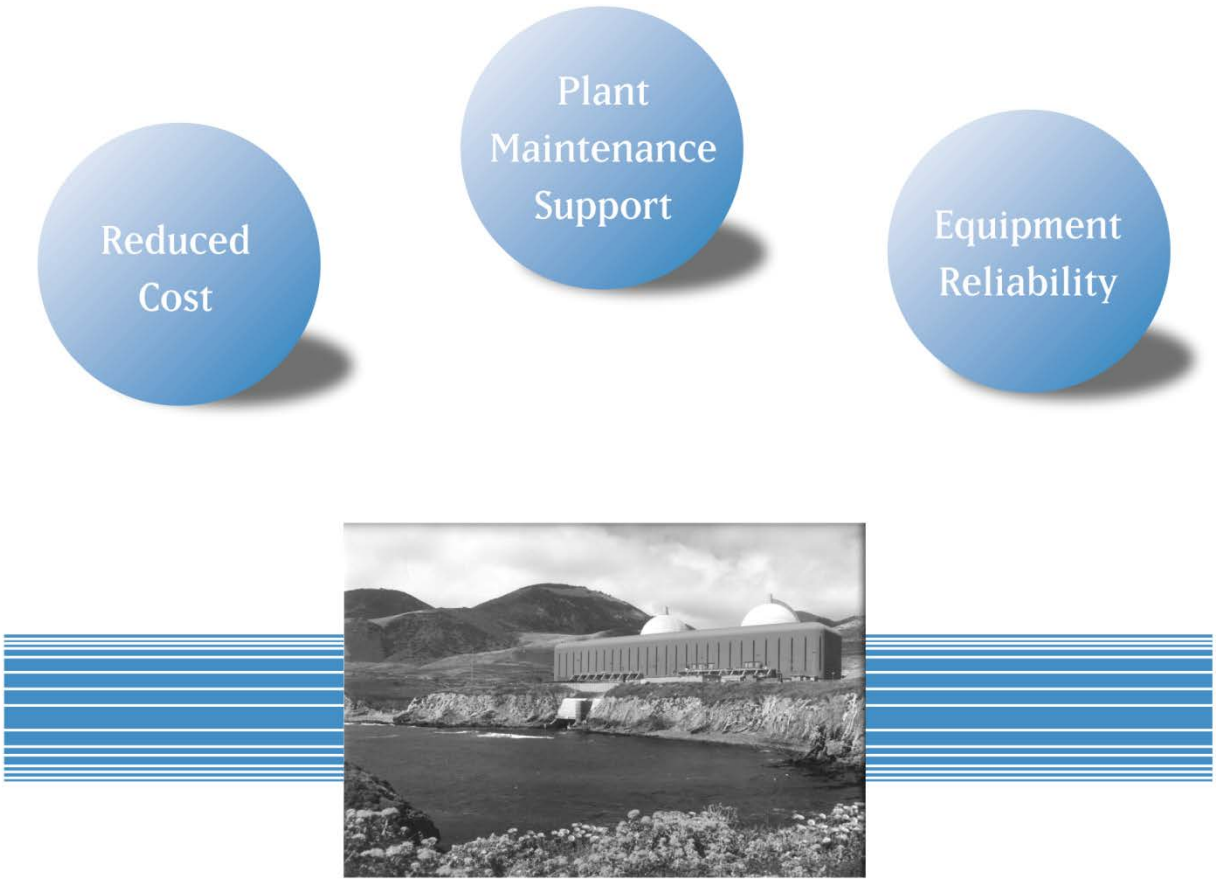

Nuclear Maintenance Applications Center: The Physical Basis of Abnormal Seal Leakoff Mitigation

Update of EPRI 1022315, Nuclear Maintenance Applications Center: Westinghouse Reactor Coolant Pump Seal Maintenance Guide

1025765

Technical Update, August 2012

EPRI Project Manager

G. Boles

This document does **NOT** meet the requirements of
10CFR50 Appendix B, 10CFR Part 21,
ANSI N45.2-1977 and/or the intent of ISO-9001 (1994)

ELECTRIC POWER RESEARCH INSTITUTE
3420 Hillview Avenue, Palo Alto, California 94304-1338 ▪ PO Box 10412, Palo Alto, California 94303-0813 ▪ USA
800.313.3774 ▪ 650.855.2121 ▪ askepri@epri.com ▪ www.epri.com

DISCLAIMER OF WARRANTIES AND LIMITATION OF LIABILITIES

THIS DOCUMENT WAS PREPARED BY THE ORGANIZATION(S) NAMED BELOW AS AN ACCOUNT OF WORK SPONSORED OR COSPONSORED BY THE ELECTRIC POWER RESEARCH INSTITUTE, INC. (EPRI). NEITHER EPRI, ANY MEMBER OF EPRI, ANY COSPONSOR, THE ORGANIZATION(S) BELOW, NOR ANY PERSON ACTING ON BEHALF OF ANY OF THEM:

(A) MAKES ANY WARRANTY OR REPRESENTATION WHATSOEVER, EXPRESS OR IMPLIED, (I) WITH RESPECT TO THE USE OF ANY INFORMATION, APPARATUS, METHOD, PROCESS, OR SIMILAR ITEM DISCLOSED IN THIS DOCUMENT, INCLUDING MERCHANTABILITY AND FITNESS FOR A PARTICULAR PURPOSE, OR (II) THAT SUCH USE DOES NOT INFRINGE ON OR INTERFERE WITH PRIVATELY OWNED RIGHTS, INCLUDING ANY PARTY'S INTELLECTUAL PROPERTY, OR (III) THAT THIS DOCUMENT IS SUITABLE TO ANY PARTICULAR USER'S CIRCUMSTANCE; OR

(B) ASSUMES RESPONSIBILITY FOR ANY DAMAGES OR OTHER LIABILITY WHATSOEVER (INCLUDING ANY CONSEQUENTIAL DAMAGES, EVEN IF EPRI OR ANY EPRI REPRESENTATIVE HAS BEEN ADVISED OF THE POSSIBILITY OF SUCH DAMAGES) RESULTING FROM YOUR SELECTION OR USE OF THIS DOCUMENT OR ANY INFORMATION, APPARATUS, METHOD, PROCESS, OR SIMILAR ITEM DISCLOSED IN THIS DOCUMENT.

REFERENCE HEREIN TO ANY SPECIFIC COMMERCIAL PRODUCT, PROCESS, OR SERVICE BY ITS TRADE NAME, TRADEMARK, MANUFACTURER, OR OTHERWISE, DOES NOT NECESSARILY CONSTITUTE OR IMPLY ITS ENDORSEMENT, RECOMMENDATION, OR FAVORING BY EPRI.

THE FOLLOWING ORGANIZATION(S), UNDER CONTRACT TO EPRI, PREPARED THIS REPORT:

Georgia Tech Research Corporation

THE TECHNICAL CONTENTS OF THIS DOCUMENT WERE **NOT** PREPARED IN ACCORDANCE WITH THE EPRI NUCLEAR QUALITY ASSURANCE PROGRAM MANUAL THAT FULFILLS THE REQUIREMENTS OF 10 CFR 50, APPENDIX B AND 10 CFR PART 21, ANSI N45.2-1977 AND/OR THE INTENT OF ISO-9001 (1994). USE OF THE CONTENTS OF THIS DOCUMENT IN NUCLEAR SAFETY OR NUCLEAR QUALITY APPLICATIONS REQUIRES ADDITIONAL ACTIONS BY USER PURSUANT TO THEIR INTERNAL PROCEDURES.

This is an EPRI Technical Update report. A Technical Update report is intended as an informal report of continuing research, a meeting, or a topical study. It is not a final EPRI technical report.

NOTE

For further information about EPRI, call the EPRI Customer Assistance Center at 800.313.3774 or e-mail askepri@epri.com.

Electric Power Research Institute, EPRI, and TOGETHER…SHAPING THE FUTURE OF ELECTRICITY are registered service marks of the Electric Power Research Institute, Inc.

Copyright © 2012 Electric Power Research Institute, Inc. All rights reserved.

ACKNOWLEDGMENTS

The following organization, under contract to the Electric Power Research Institute (EPRI), prepared this report:

Georgia Tech Research Corporation
505 Tenth Street
Atlanta, GA 30332

Principal Investigator
R. F. Salant

This report describes research sponsored by EPRI.

EPRI acknowledges Georgia Tech graduate research assistant John W. Payne for his contribution to this report.

EPRI also acknowledges the input of the following people whose knowledge and experience with reactor coolant pump seals were valuable to this effort:

V. Gerry Arzani, Duke Energy

Kevin Glandon, Southern Nuclear

Mike Pugh, EPRI

Steve Rosenau, Duke Energy

This publication is a corporate document that should be cited in the literature in the following manner:

Nuclear Maintenance Applications Center: The Physical Basis of Abnormal Seal Leakoff Mitigation—Update of EPRI 1022315, Nuclear Maintenance Applications Center: Westinghouse Reactor Coolant Pump Seal Maintenance Guide. EPRI, Palo Alto, CA: 2012. 1025765.

PRODUCT DESCRIPTION

This technical update provides insights into the physical basis for the effectiveness of actions taken to address Westinghouse #1 seal leakoff anomalies (that is, when #1 seal leakoff exceeds manufacturer's maximum value or is less than manufacturer's minimum value).

Background

Over the years, the Electric Power Research Institute (EPRI) has worked with utilities to develop actions to address Number 1 seal leakoff anomalies (high or low) in Westinghouse reactor coolant pumps (RCPs). Some utilities encouraged EPRI to use universities to look at changes that could be made to these seals to address these anomalies. To accomplish this, EPRI worked with a university to 1) understand why the actions captured in past EPRI literature were effective and 2) using this information, proceed with a conceptual design that controls and adjusts seal geometry to address the problem of leakoff anomalies during normal plant transients (such as startup and shutdown); during changes in water properties due to temperature, pressure, or chemical changes; or during normal wear of seal surfaces. In addition, the change to the design might allow for less periodic maintenance to be performed on the seals without sacrificing reliability, which would provide economic benefits to utilities in the form of less labor and work-hours during refueling outages.

Objectives

The objective of this phase of the project was to review the physics governing the behavior of mechanical seals based on seal face geometry and behavior of the fluid film affecting controlled leakage of the RCP seal. With a better understanding these physics, proposals to modify seal design should be more effective.

Approach

An analytical approach was used to research this issue, which included research of fluid dynamic literature, review of industry operating experience, and review by utility peers. Seal manufacturer involvement was desired; however, neither the original equipment manufacturer nor a second-party seal manufacturer agreed to engage in discussions about this project for unstated reasons. It is presumed that there was insufficient commercial value to these companies to warrant their involvement.

Results

The research provides a plausible technical explanation for the effects of actions by plant staff such as lowering seal water injection temperature, replacing seal water injection filters, altering reactor coolant system makeup methodology, or changing primary water chemistry on Westinghouse RCP #1 seal leakoff. These effects were both immediate and longer term.

Based on this better understanding of seal leakoff causes and effects, utilities might be able to determine which actions would be most effective when seal leakoff anomalies occur.

Applications, Value, and Use

The intended audience for this report is plant engineers (for example, system or maintenance engineers), operators, and plant chemists. By better understanding the effects of seal leakoff mitigative actions, plant staff may develop more precise actions based on their individual situations.

In addition, the results of this report will help EPRI and its advisers determine the best path forward for seal redesign so that seal face geometry can be changed and controlled.

Keywords

Maintenance
Primary water chemistry
Pumps
Reactor coolant pump (RCP)
Seals

ABSTRACT

A review of the physics governing the behavior of mechanical seals reveals the way in which coning of the faces (in hydrostatic seals) and circumferential variations in the face geometry (in hydrodynamic seals) determine the lubrication regime (full film or mixed lubrication) in the interface between the seal faces and the thickness of the lubricating film. Seal leakoff strongly depends on the latter.

Because the face geometry is affected by material deposited on the face, wear of the face, and thermal and mechanical deformation, abnormal seal leakoff from reactor coolant pump (RCP) seals can result from these processes. In particular, it can result from electrophoresis, which deposits material on the faces; from excessive face contact, which produces wear; and from pump transients and pressure and temperature excursions, which alter the thermal and mechanical deformations.

Two basic strategies to mitigate abnormal seal leakoff from RCP seals have been developed. The first strategy involves changing the temperature of the seal injection water. To reduce seal leakoff, the first course of action recommended by the industry is to reduce the temperature of the injection water. This increases the water viscosity on which leakage rate is inversely proportional. More importantly, it decreases the thermal deformation and coning of the faces, which decreases the film thickness—on which the leakage rate is proportional to the third power. Conversely, to increase leakoff, the temperature of the injection water should be increased, which produces the opposite physical effects.

The second mitigation strategy involves the prevention of electrophoresis. This is achieved primarily by replacing seal injection filters and changing reactor makeup water methodology and reactor coolant system chemistry. These steps prevent the buildup of deposited material on the seal faces so that the face geometry remains in its original form, designed to produce the optimum coning and resulting lubrication conditions for optimum performance. This strategy is, of course, effective only when the abnormal seal leakoff is due to electrophoresis.

CONTENTS

1 INTRODUCTION 1-1
Key Points 1-1
2 OPERATION OF A MECHANICAL SEAL 2-1
Basic Concept 2-1
Sealing Zone 2-2
Floating Seal Face: Location and Forces 2-3
Forces from Secondary Seals 2-5
Hydrostatic Seals 2-5
Non-Contacting Hydrostatic Seals 2-7
Contacting Hydrostatic Seals 2-8
Production of Coning 2-9
Hydrodynamic Seals 2-9
Effects of Changing Operating Conditions 2-10
Two-Phase Effects 2-12
3 CAUSES OF ABNORMAL SEAL LEAKOFF 3-1
Electrophoresis 3-1
Failure to Adequately Pre-Charge 3-2
Particulate Contamination in Water 3-2
Pump Transients, Including Trip 3-3
Temperature and Pressure Excursions 3-3
4 ABNORMAL SEAL LEAKOFF MITIGATION STRATEGIES 4-1
Changing Seal Injection Water Temperature 4-1
Replacing Seal Injection Filters, Reactor Makeup Water Methodology, and Changing Reactor Coolant System Chemistry 4-2
5 REFERENCES 5-1
A KEY POINTS SUMMARY A-1
Key Technical Points A-1
B SEAL DRAWINGS B-1

LIST OF FIGURES

Figure 2-1 Schematic of a mechanical seal 2-1
Figure 2-2 Forces on floating seal face 2-3
Figure 2-3 Coning of mechanical seal faces 2-6
Figure 2-4 Fluid pressure distribution in a hydrostatic seal 2-7
Figure 2-5 Effects of changing operating conditions 2-11
Figure A-1 Westinghouse #1 Seal B-1
Figure A-2 Westinghouse #2 Seal B-2
Figure A-3 Westinghouse #3 Seal B-3
Figure A-4 Example of Westinghouse Seal Assembly, Pump Type Model 100 and Model 93-A1 ..... B-4

1
INTRODUCTION

There is a continuing need to mitigate abnormal seal leakoff in the Westinghouse reactor coolant pump (RCP) seal system. Two strategies to mitigate abnormal seal leakoff from RCP seals have been developed by industry and provided in EPRI guides: changing seal injection water temperature and preventing electrophoresis. However, much of these strategies' success is not well understood. This report presents the physics governing the behavior of RCP seals and explains the physical causes of abnormal seal leakoff and the rationale behind these mitigation strategies.

Key Points

Throughout this guide, key information is summarized in "Key Points." Key Points are bold lettered boxes that succinctly restate information covered in detail in the surrounding text, making the key point easier to locate.

The primary intent of a Key Point is to emphasize information that will allow individuals to take action for the benefit of their plant. The information included in these Key Points was selected by NMAC personnel and the consultants and utility personnel who prepared and reviewed this guide.

This report contains Key Technical Points, which have an identifying icon, as shown below, to draw attention when quickly reviewing the guide.

Key Technical Point

Targets information that will lead to improved equipment reliability.

2
OPERATION OF A MECHANICAL SEAL

Basic Concept

RCP seals are mechanical seals (sometimes called *face seals*). Mechanical seals have been studied over many years, and their basic operation is generally well understood [1]. A schematic of a generic mechanical seal is shown in Figure 2-1. The seal contains two annular faces: the rotating face (runner) is mounted on the rotating shaft, and the non-rotating face is mounted on the housing. One of the two faces is flexibly mounted so that it can move in the axial direction (float) while the mating face is fixed axially. Leakage between the rotating face and the shaft and between the non-rotating face and the housing is prevented by secondary seals, for example, O-rings. Therefore, any leakage through the seal must flow through the interface between the two seal faces. A spring or bellows is usually used to force the floating seal face toward the fixed face in order to close the seal under static unpressurized conditions, preventing static leakage. When the shaft is rotating, the interface between the two faces is lubricated by the sealed fluid. There are also drive (or anti-rotation) devices to prevent the rotating face from rotating relative to the shaft and the non-rotating face from rotating relative to the housing (not shown in the schematic). These are usually pins or keys.

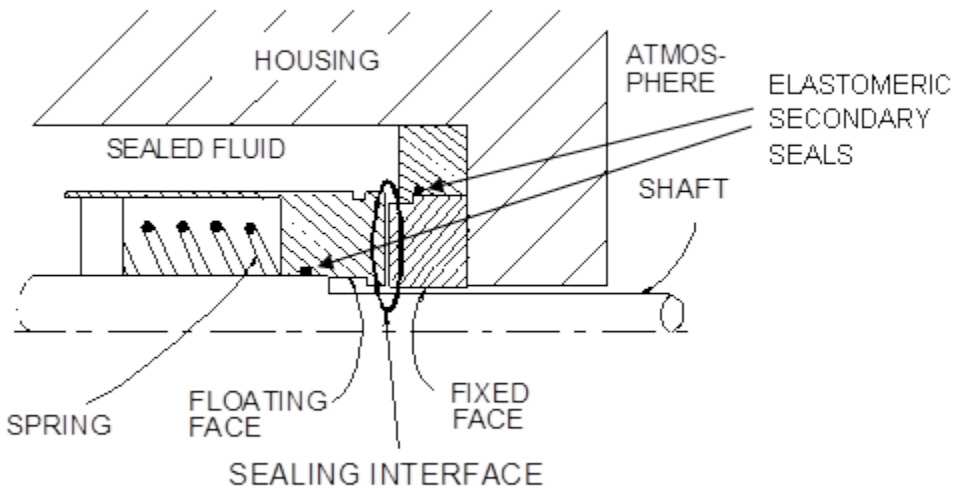

Figure 2-1
Schematic of a mechanical seal

Figure 2-1 is a simplified schematic containing the most basic elements of a mechanical seal. It shows the most common configuration for commercial industrial seals. Schematics of the Westinghouse #1, #2, and #3 seals and the complete Westinghouse seal system are contained in Appendix B.

In Figure 2-1, the rotating face is the floating seal face, which is loaded by a spring (or several springs) and by the fluid pressure. The sealed pressure is at the OD of the faces. Many other configurations are possible [2].

In the Westinghouse #1 and #2 seals, the non-rotating face is the floating face, unlike the generic seal shown in Figure 2-1. There is no spring, and the seal is loaded primarily by the fluid pressure. In the #3 seal, the non-rotating face is again the floating face, but in this seal a springs or bellows is used. In the Westinghouse vertical assembly, there are gravity forces on the floating seal faces, but these are negligible compared to the pressure forces under pressurized conditions.

One of the most important advantages of the mechanical seal is its ability to tolerate some degree of eccentricity, misalignment, and run-out while still maintaining a low leakage rate. Even if the two faces are not perfectly parallel and concentric, they will still track one another (if properly designed) because one of the faces is flexibly mounted and floats. It is important to note that a conventional mechanical seal is passive and self-adjusting. The thickness of the lubricating film in the interface between the seal faces cannot be set or adjusted by the operator. Rather, it is determined by the design and operating conditions through the physics of the device, as described next. The thickness of the lubricating film in the interface (with the sealed fluid acting as the lubricant) is typically on the order of microns and is much smaller than the clearance in fixed clearance seals (which is determined by the need to avoid interference in the presence of eccentricity, misalignment, and run-out). Therefore, the leakage rate of the mechanical seal is smaller than that of a fixed clearance seal—an important advantage.

Some leakage is always necessary for the proper operation of a mechanical seal under dynamic conditions. It acts as a lubricant and reduces or completely eliminates the contact forces on the faces, reducing or eliminating mechanical damage and wear. It also acts to cool the faces, reducing the impact of heat generation in the interface and the resulting thermal damage.

Sealing Zone

The interface between the seal faces (Figure 2-1) is termed the *sealing zone* and is the most critical portion of the seal. Because the faces are in relative motion, sealing is difficult. Face damage and wear are most likely to occur at this interface. Frictional forces are exerted on the faces, and heat is generated at this location. The rest of the seal must be designed so as to achieve optimum conditions in this zone.

The lubrication regime in the sealing zone is either full-film lubrication, with non-contacting faces, or mixed lubrication, with asperity contact (contact between asperities that are distributed along the surfaces of the two adjoining seal faces). Which of these regimes occurs depends on the seal design and operating conditions. If the film thickness is larger than approximately three times the rms roughness of the seal faces, there is full-film lubrication. If the film is thinner, mixed lubrication occurs. As mentioned previously, the sealed fluid acts as the lubricant.

Key Technical Point

If the lubricating film thickness between the adjoining seal faces is larger than approximately three times the rms roughness, there is full-film lubrication. If the film is thinner, there is mixed lubrication.

The choice of lubrication regime depends on the seal requirements and operating conditions. Full-film lubrication results in maximum seal life and minimum probability of failure, but also relatively high leakage rate. Conversely, mixed lubrication results in minimum leakage rate but

shorter seal life and higher probability of failure. For RCP seals, full-film lubrication is clearly the ideal choice for the primary seal because predictable and reliable performance is important for the RCP application.

Key Technical Point

For the RCP application, minimal leakage is not as important as predictable and reliable performance.

The Westinghouse #1 seal is designed to operate with full-film lubrication. The #2 and #3 seals operate with mixed lubrication (boundary lubricated) because these latter two seals experience much lower pressure forces than the #1 seal and are therefore much less susceptible to wear and damage.

Floating Seal Face: Location and Forces

The axial location of the floating seal face determines the average film thickness and the lubrication regime. All other sealing zone characteristics (such as heat generation rate, temperatures, pressures, contact areas and forces, wear rate, seal life, and leakage rate) are determined by the film thickness distribution. The axial location of the floating face, in turn, is determined by the forces acting on the face because the face will assume an equilibrium location such that the net axial force on it is zero. These forces are shown in the schematic diagram in Figure 2-2. Forces that tend to push the floating face toward the fixed face are called *closing forces*; those that push the floating face away from the fixed face are called *opening forces*.

There are two closing forces: 1) the pressure force due to the sealed pressure acting on the back side of the floating face and 2) the spring force if a spring is present. The pressure force is generally dominant except at very low sealed pressures. The spring force, if any, is usually important only under static, unpressurized conditions. Its main function is to keep the seal faces closed when the sealed device is not operating. As mentioned previously, the gravity force is negligible compared to the pressure force under pressurized conditions.

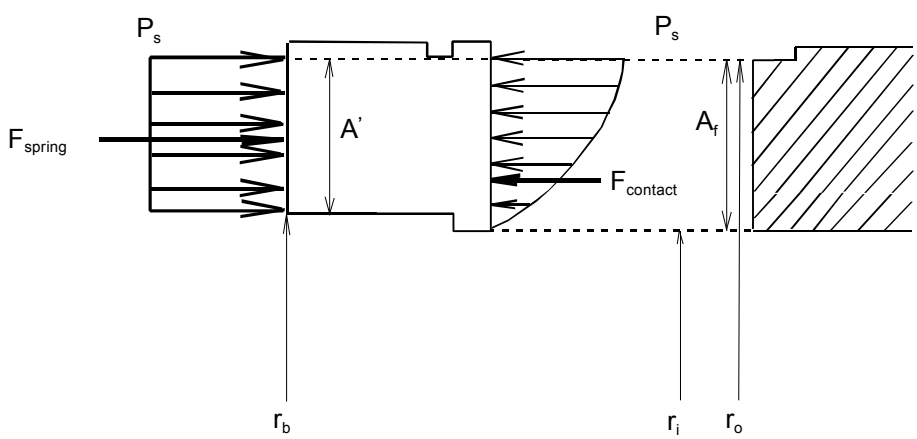

Figure 2-2
Forces on floating seal face

For moderate to high pressures, the spring force can usually be ignored. The total closing force is then given by

$$F_{closing} = F_{spring} + p_s A' \qquad \textbf{Eq. 2-1}$$

where A' is the effective area of the back side of the seal face and p_s is the sealed pressure (relative to the pressure on the low-pressure side of the seal). The total closing force can be expressed in terms of the effective face area, A_f, by introducing the balance ratio

$$N_B = A' / A_f = \frac{r_o^2 - r_b^2}{r_o^2 - r_i^2} \qquad \textbf{Eq. 2-2}$$

This expression for the balance ratio is valid for a spring-loaded seal pressurized at the OD. The balance ratio is known once the seal geometry is specified and is usually between 0.65 and 0.90. To achieve full-film lubrication, the balance ratio should be less than 1.0. Some "contacting seals" have balance ratios larger than 1.0, resulting in mixed lubrication. These are called *unbalanced seals*. The closing force is given by

$$F_{closing} = F_{spring} + p_s N_B A_f \qquad \textbf{Eq. 2-3}$$

It is quite easy to determine the closing forces for a prospective seal design. However, this is not the case for the opening forces.

As shown in Figure 2-2, there are two opening forces: the pressure force due to the pressure distribution in the sealing zone and the contact force due to asperity contact. (The latter is not present in the case of full-film lubrication.) Therefore, the total opening force is given by

$$F_{opening} = \int_{A_f} p \; dA + F_{contact} \qquad \textbf{Eq. 2-4}$$

This opening force cannot be computed, a priori, for a given seal design. To obtain this force, further analysis is required as discussed next.

By equating the closing and opening forces, one obtains the equilibrium condition that determines the axial location of the floating seal face:

$$F_{closing} = F_{opening} \qquad \textbf{Eq. 2-5}$$

or,

$$F_{spring} + p_s N_B A_f = \int_{A_f} p \; dA + F_{contact} \qquad \textbf{Eq. 2-6}$$

The pressure distribution in the sealing zone and the contact force (on the right-hand side [RHS] of Equation 2-6) depend on the axial location of the floating face and therefore on the film thickness distribution, which is affected by both mechanical and thermal deformations. While these deformations are very small (on the order of microns), they are of the same order as the film thickness and therefore play an important role in the operation of the seal (described next). This is what makes Equation 2-6 difficult to solve.

Forces from Secondary Seals

In Equations 2-1 through 2-6, the force exerted by the elastomeric secondary seal (shown in Figure 2-1 and discussed previously in "Basic Concept") on the floating seal face is neglected. The elastic contact force in the radial direction results in an axial force due to friction. The latter force is usually much smaller than the other axial forces and can be ignored for a first approximation of seal operation. However, that force can produce two important effects:

- Depending on the elastomeric secondary seal material, the seal will age over time. At some point, the contact force and friction force exerted on the floating face can become large enough to prevent the free movement of the face in the axial direction.
- Depending on the elastomeric material, the contact and friction forces may be large enough to produce hysteresis in the seal, so that seal performance as the sealed pressure is reduced will differ from the performance as the sealed pressure is increased. Similar hysteresis can occur during speed changes. Therefore, the proper selection of this material is very important. In the Westinghouse #1 seal, the seal faces (faceplates) are lightly secured to the holders with an O-ring. These can also contribute to hysteresis.

Hydrostatic Seals

Most mechanical seals are nominally *hydrostatic seals*. This means that the pressure distribution in the sealing zone is induced by the sealed pressure; it is not directly produced by the rotation of the seal face, although it can be affected by the rotation. In this regard, the hydrostatic seal is analogous to the hydrostatic bearing. The faces of a hydrostatic seal are axisymmetric, so that there is no circumferential variation in the film thickness; otherwise, there would be a hydrodynamic effect (see below). Therefore, the film thickness can vary only radially—a condition referred to as *coning*. The coning, δ, is defined as the difference in the film thicknesses at the two radial boundaries of the sealing zone. It is positive when the film converges in the direction of leakage (flow) and negative when the film diverges in the direction of leakage. Positive coning (sometimes called *taper*) for an outside pressurized seal is shown in Figure 2-3. *Coning* is sometimes defined as the angle of the face surface in microradians. This is, in fact, the way the coning of the Westinghouse seals is usually described.

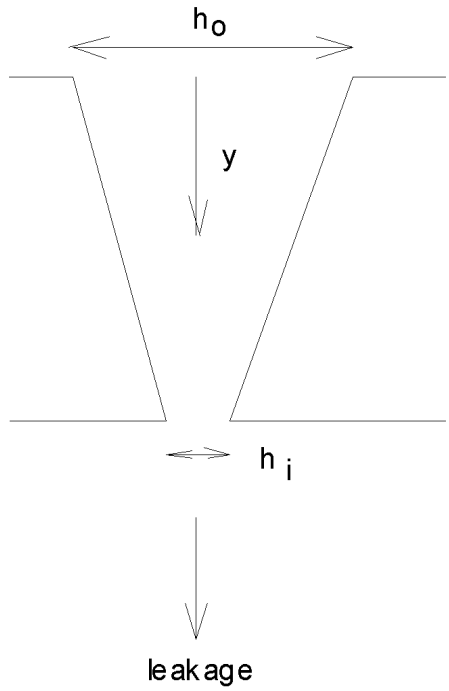

Figure 2-3
Coning of mechanical seal faces

The fluid pressure distribution in the sealing zone of a hydrostatic seal with a specified coning and film thickness can be determined from the solution of Reynolds equation

$$\frac{\partial}{\partial r}\left(\frac{rh^3}{12\mu}\frac{\partial p}{\partial r}\right)+\frac{1}{r}\frac{\partial}{\partial \theta}\left(\frac{h^3}{12\mu}\frac{\partial p}{\partial \theta}\right)=\frac{U}{2}\frac{\partial h}{\partial \theta} \qquad \text{Eq. 2-7}$$

where r is the radial coordinate, θ is the circumferential coordinate, h is the local film thickness, μ is the viscosity, and U is the relative speed between the two surfaces.

For the hydrostatic seal, the second term on the left-hand side (LHS) and the term on the RHS are zero. The solution, which is easily obtained numerically, is shown schematically in Figure 2-4. It is seen that the shape of the pressure distribution depends on the ratio δ / h_{ave}. For parallel faces ($\delta / h_{ave} = 0$), the distribution is almost linear; for positively coned faces, it is convex; for negatively coned faces, it is concave. Because the opening force due to the fluid pressure is proportional to the area under the pressure distribution curve, it is seen that for a given film thickness, the larger the coning, the higher the opening force due to fluid pressure. Similarly, for a given coning, the smaller the average film thickness, the higher the opening force due to fluid pressure.

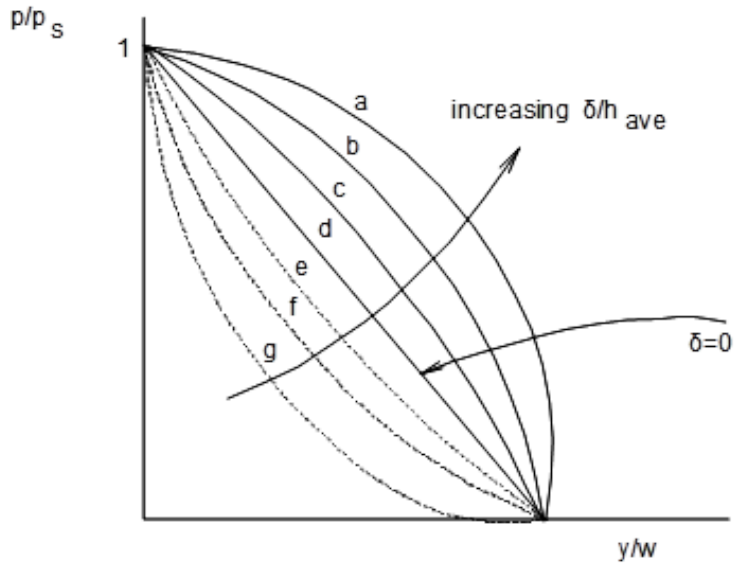

Figure 2-4
Fluid pressure distribution in a hydrostatic seal

Non-Contacting Hydrostatic Seals

The force balance for a non-contacting hydrostatic seal in which full-film lubrication occurs between the faces is relatively easy to evaluate. At moderate and high sealed pressures, the spring force can be neglected. Because the contact force can be neglected, the equilibrium equation (Equation 2-6) becomes

$$p_s N_B A_f \approx \int_{A_f} p \, dA$$

or

$$N_B = \int \frac{p}{p_s} \, d\frac{A}{A_f} \qquad \textbf{Eq. 2-8}$$

For a given value of δ / h_{ave}, the integral on the RHS of Equation 2-8 is just the area under the corresponding curve in Figure 2-4. Therefore, each curve in Figure 2-4 corresponds to a seal with a certain balance ratio. The curves for positive values of δ / h_{ave} each correspond to a balance ratio larger than 0.5, while those for negative values correspond to balance ratios less than 0.5.

Equation 2-8 can be written as

$$N_B = f(\delta / h_{ave}) \qquad \textbf{Eq. 2-9}$$

Therefore, for a seal with a given balance ratio, the value of δ / h_{ave} is fixed. As such, the average film thickness is proportional to the value of the coning; the larger the coning, the thicker the film. Therefore, when designing a hydrostatic seal, it is necessary to design in the "right" amount of coning (both manufactured "pre-coning" and that produced by mechanical and thermal deformation). Too much coning will result in excessive leakage, while too little will result in too thin a film and contact between the faces.

Key Technical Point

The lubricating film thickness is proportional to the coning; the larger the coning, the thicker the film.

It is important to note that the leakage flow rate, Q, is proportional to the pressure drop across the seal and the cube of the average film thickness and is inversely proportional to the viscosity.

$$Q \propto \frac{\Delta p \left(h_{ave}\right)^3}{\mu} = \frac{p_s \left(h_{ave}\right)^3}{\mu} \qquad \textbf{Eq. 2-10}$$

Therefore, the leakage is extremely sensitive to the film thickness and therefore to the coning.

Key Technical Point

Leakage is inversely proportional to the viscosity and proportional to the cube of the film thickness, so it is very sensitive to the coning.

The axial stability characteristics of a non-contacting hydrostatic seal can also be seen from Figure 2-4. First, consider a seal with positive coning. Assume that such a seal is operating in equilibrium with the pressure distribution of Curve *b*. If a small disturbance reduces the average film thickness, h_{ave}, the value of δ / h_{ave} increases. Then, the pressure distribution in the sealing zone changes to the one shown by Curve *a*. Therefore, the opening force increases and becomes greater than the closing force, causing the floating face to return to its original position. On the other hand, if a small disturbance increases h_{ave}, the value of δ / h_{ave} decreases and the pressure distribution in the sealing zone changes to the one shown by Curve *c*. The opening force then decreases, and the floating face is again returned to its original location. Therefore, a seal with positive coning ($N_b > 0.5$) will be stable to axial disturbances. It has positive axial stiffness. Now consider a seal with negative coning. Assume that it is operating with the pressure distribution shown by Curve *f*. If a small disturbance reduces h_{ave}, the value of δ / h_{ave} increases and the pressure distribution in the sealing zone changes to that of Curve *g*. The opening force decreases and is now less than the closing force. This causes the floating face to move closer to the fixed face, away from its original location. On the other hand, if a small disturbance increases h_{ave}, the value of δ / h_{ave} decreases and the pressure distribution in the sealing zone changes to that shown by Curve *e*. The opening force increases, and the floating face is moved farther from the fixed face, once again away from its original location. It is therefore seen that a hydrostatic seal with negative coning ($N_b < 0.5$) will be unstable to axial disturbances and has negative axial stiffness. The faces of such a seal will either fly open or collapse. A seal with perfectly parallel faces (zero coning, $N_b = 0.5$) will be in neutral equilibrium, without any unique average film thickness. This is the reason that all practical non-contacting hydrostatic seals have balance ratios larger than 0.5, usually in the range 0.65–0.9.

Contacting Hydrostatic Seals

While the non-contacting hydrostatic seal, discussed previously, has the advantages of relatively long life and high reliability, it has become necessary to drastically reduce leakage rates in certain applications (for example, to meet EPA emission requirements). This has caused

designers to reduce the film thicknesses in hydrostatic seals to such a degree that asperity contact between the faces occurs. This is done by reducing the fluid pressures in the sealing zone through a reduction in the coning. In addition, in low sealed pressure applications (for example, automotive water pump seals and in the Westinghouse #2 and #3 seals), hydrostatic pressures produce insufficient opening forces to maintain a continuous fluid film. For such contacting seals, the contact force term on the RHS of Equation 2-6 is very important and cannot be neglected—it is required in order to maintain the floating seal face in equilibrium. Therefore, the conclusions regarding the relationship between average film thickness and coning and that between coning and stability (described above for non-contacting seals) are no longer necessarily valid for contacting seals. It is important to note that the latter may run stably with negative or zero coning and with positive coning.

Production of Coning

The faces of conventional commercial mechanical seals are manufactured to be flat and parallel under static unpressurized conditions. This is the case for the Westinghouse #2 and #3 seals. Such seals develop coning under pressurized dynamic conditions due to mechanical and thermal deformation. Depending on the design details, mechanical deformation can lead to either a converging (positive coning) or diverging (negative coning) gap, going from the OD to the ID. Thermal deformation, however, generally produces a converging gap (positive coning), going from the OD to the ID, in most commercial seals. To obtain a stable seal with full-film lubrication, it is necessary to have a converging gap going from the high-pressure side of the seal to the low-pressure side, as described above. Even for a seal with mixed lubrication, such a converging gap is preferred in order to allow the sealed fluid to effectively penetrate the gap and lubricate the interface. This is the reason that most commercial seals are designed with the high pressure on the OD.

In contrast to the conventional commercial mechanical seals, discussed above, the Westinghouse #1 seal is pre-coned. The faces are manufactured to have a radial taper, producing positive coning even under static unpressurized conditions. The taper is compound, with the major taper at the OD and over the majority of the cross section. The minor taper has an angle that is roughly one-third that of the major taper. (However, the general effects of simple taper, discussed above and below, apply as well to compound taper.) This pre-coning is done to ensure full-film lubrication under design conditions. However, it should be noted that the coning will be affected by mechanical and thermal deformation and, under pressurized dynamic conditions, will differ from the nominal static unpressurized value.

Key Technical Point

Although the Westinghouse #1 seal is pre-coned to a specified taper, the coning will be affected by mechanical and thermal deformation and will differ from the nominal value under pressurized dynamic conditions.

Hydrodynamic Seals

Unlike a hydrostatic seal, in a hydrodynamic seal the pressure distribution in the sealing zone is induced by the rotation of one of the seal faces. Even a seal designed to be hydrostatic could exhibit some hydrodynamic behavior. The term *hydrodynamic seal* originated from an analogy with the hydrodynamic bearing. To generate elevated pressures by means of rotation, the film

thickness must vary in the circumferential direction. This occurs through a circumferential variation in face geometry, which may be designed into the seal or may occur through inadvertent deformation. A section of the pair of seal faces, with one face moving in the circumferential direction relative to the other face, then acts like a slider bearing and generates an elevated pressure distribution. This pressure distribution can be computed from the Reynolds equation (Equation 2-7), where the RHS is the hydrodynamic driving term (which is zero for a hydrostatic seal). These hydrodynamic seals are usually intended to operate with full-film lubrication. By its very nature, the operation of this type of seal is speed dependent: generally, the higher the speed, the larger the film thickness.

One type of hydrodynamic seal contains microscopic hydropads etched into one of the faces. These hydropads have depths on the order of microns.

A much more common type of hydrodynamic seal contains macroscopic hydropads, grooves or slots with depths on the order of a millimeter, which are machined into the face. The mechanism by which such a seal operates involves two phenomena [3]. First, the macroscopic features destroy the symmetry of the face so that, when the seal is in operation, the face develops waviness due to asymmetric mechanical and thermal deformation. The amplitude of the waviness is on the order of microns—the same order as the film thickness. Second, as a result of the circumferential variation in film thickness, a periodic elevated pressure distribution is produced. This pressure variation can be relatively large because the waviness amplitude is on the same order as the film thickness (unlike the depth of the macroscopic features). This spatially fluctuating pressure distribution generates a net opening force because cavitation occurs below the cavitation pressure (the pressure at which air comes out of solution) and the pressure distribution is truncated at the cavitation pressure.

It is important to note that no seal can be purely a hydrodynamic seal. All hydrodynamic seals have, in addition to the hydrodynamically induced pressure distribution, a hydrostatic component. Therefore, the term *hydrodynamic seal* is somewhat misleading. The relative importance of the hydrodynamic effect compared to the hydrostatic effect depends on the operating pressure, speed, and seal design (including the hydrodynamic features). For full-film lubrication, while a purely hydrostatic seal cannot operate stably with negative coning, a hydrodynamic seal with a large enough hydrodynamic component can operate stably with negative coning.

Sometimes a seal intended to be hydrostatic and non-contacting does not generate a high enough opening force to maintain full-film lubrication. Frequently in such cases, hydrodynamic features are added to the face to augment the hydrostatic opening force.

Conversely, sometimes a seal intended to be solely hydrostatic inadvertently acquires a hydrodynamic component. This could occur due to the presence of a drive pin or any other feature that destroys the axisymmetry of the seal ring. The ring can then develop waviness through thermal and mechanical deformation.

Effects of Changing Operating Conditions

Changes in sealed pressure and temperature will produce changes in the mechanical and thermal deformations, respectively, of the seal faces. Therefore, the coning will change and subsequently the film thickness. This will occur both in purely hydrostatic seals and in hydrodynamic seals because the latter has a hydrostatic component of the fluid pressure distribution in the sealing

zone, as discussed above. In addition, for hydrodynamic seals, the face waviness will be changed due to the change in face deformation—also resulting in a change in film thickness. The seal face geometry will also change if material is deposited onto the face surfaces, for example, through electrophoresis. This will change the coning (as well as the waviness in hydrodynamic seals) and therefore the film thickness. Changes in speed will also lead to changes in coning and film thickness due to changes in heat generation in the sealing zone and the resulting changes in thermal deformation. In hydrodynamic seals, there will also be changes in the film thickness due to changes in the hydrodynamic pressure generation. These various changes are illustrated in Figure 2-5.

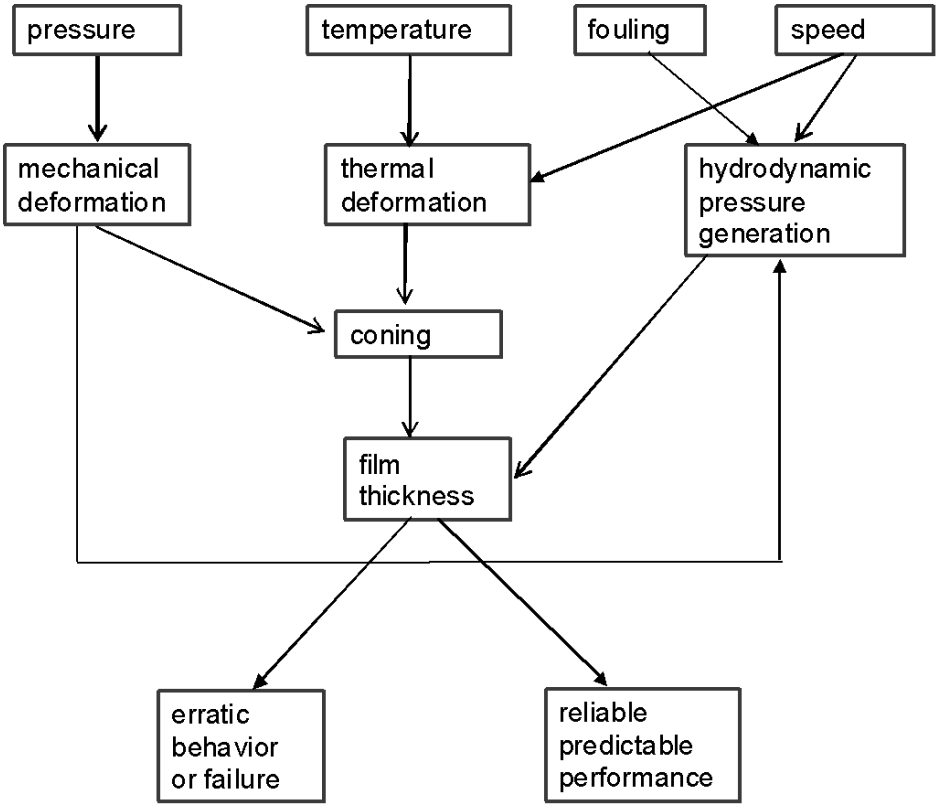

Figure 2-5
Effects of changing operating conditions

These changes in film thickness can lead to either abnormally high or abnormally low seal leakoff. If the film thickness is reduced to the point at which excessive face contact occurs, eventual seal failure can result.

Key Technical Point

Changes in operating conditions will lead to changes in mechanical and thermal deformation, coning film thickness, and leakage rate. In addition, electrophoresis will change the coning, film thickness, and leakage rate.

Two-Phase Effects

These discussions all assume that the fluid within the sealing zone is a liquid. However, when the liquid near the high-pressure side of the sealing zone gets close to the vapor temperature, it is possible for the liquid to vaporize as it flows across the seal face. If a stable configuration is reached, the leakage rate is actually lower than it would be under single-phase conditions [4]. However, frequently when two-phase conditions exist, the seal becomes unstable. Three types of instability can occur: the seal can fly open, the fluid film can collapse and the seal shuts with face contact, or the floating face oscillates with increasing amplitude and eventual face contact. Various investigators, through simulation studies, have found that under certain operating conditions and seal design, negative coning tends to stabilize the seal [5], while under other operating conditions and seal design, positive coning tends to stabilize the seal [6–10].

For RCP seals, two-phase conditions would be expected to be encountered under station blackout conditions.

3
CAUSES OF ABNORMAL SEAL LEAKOFF

Due to the complexity of the RCP seal system and the many interacting physical processes governing seal behavior, there are many possible causes of abnormal seal leakoff. Those related to the design of the seal system (for example, inadequate seal face material or secondary seal material) and to the maintenance of the system (for example, improper installation of components) are not considered in this report.

Electrophoresis

In RCP seals that are otherwise running properly, out-of-specification leakage is frequently caused by chemical deposition on the seal faces. This chemical deposition is usually due to adverse temperature and water chemistry in the RCS. Chemical deposition, also called *electrophoresis*, represents one of the most significant issues encountered regularly by utilities during operation. The deposition of material on the faces of the seals affects their geometry and coning, which in turn affects the separation of the seal faces and the ability of the seals to react to changing RCS conditions. Seal faces that are too far apart lead to high leakage, and seal faces too close together lead to low leakage and possible face contact.

As the fuel cycle ends and the unit proceeds toward the refueling outage stage, unique water chemistry conditions arise that can cause electrophoresis. As the fuel is spent and the RCS water undergoes dilution, the boron concentration in the RCS water decreases sharply. This lowered concentration raises the overall pH in the RCS, creating a higher likelihood of chemical deposition on the seal faces that affects the geometry of the faces, the face gap, and the coning—potentially creating high or low out-of-specification leakage or seal instability. In addition, high lithium concentration in the RCS at the fuel's end of core life (EOL) can raise the pH, creating the potential for chemical deposition. In 2006, Salem Unit 2 experienced a manual reactor trip during a planned coast-down due to excessive #1 seal leakage. The root cause of this leakage was determined to be corrosion products deposited on the seal faces. These products precipitated out of solution from the RCS due to low boron concentration and lithium in the water, creating a higher-than-normal pH and sensitivity to chemical composition changes.

As mentioned, electrophoresis is believed to be caused or worsened by two conditions:

- **Water chemistry**. The chemistry of the RCS is believed to be the major cause or contributor to electrophoresis. Chemical deposition on the seal faces seems to be driven by a rise in the pH of the RCS. The pH of the RCS, in turn, is driven in part by the boron concentration of the RCS water, which is high at the beginning of a fuel cycle but becomes very low (almost nonexistent) at the end of the fuel cycle when reactor makeup water dilutions are more frequent. A gradual rise in RCS pH over the fuel cycle seems to permit an increase in the chemical scale deposited on the seal faces, altering their geometry and ability to maintain consistent leakage. At the end of fuel cycles, the low boron concentration in the RCS also seems to cause increased sensitivity to pH changes. In addition, the presence of carbon steel in the RCS piping may contribute to the presence of dissolved iron in the water, which then may be deposited as hematite on the seal faces—creating the same geometry issues. Many utilities experience high leakage during the days or weeks leading up to a refueling outage, at

which point the main concern is preventing the leakage from reaching the point at which the plant must be forced into a premature shutdown to avoid catastrophic seal failure rather than being shut down in accordance with the refueling outage schedule.

- **Temperature**. A second driving effect of electrophoresis appears to be the temperature at the seal inlet. Because the seal injection mechanism buffers the seal inlet from the full temperature of the RCS, the seal inlet temperature is fairly constant. However, slight increases in temperature can reduce the dissolved oxygen concentration at the seal inlet, leading to another rise in pH and contributing to chemical deposition. Conversely, seal injection temperature decreases can create a "flushing" effect by lowering the pH and stripping some deposited material from the seal faces as well as lowering leakage by affecting the response of the floating seal face (described next).

Failure to Adequately Pre-Charge

Failure to establish appropriate startup conditions can lead to excessive wear on vital components or can cause immediate failure of one or more seal stages. Proper startup procedure includes a pressure differential of at least 200 psi (1.4 MPa) and a leakage rate of at least 0.2 gpm (0.76 lpm) across the #1 seal. Blocked injection lines, overly high backpressure, and stuck seal faces can cause failure to establish appropriate leakage during startup. Failing to pre-charge the #1 seal can cause it to run in face contact, causing rubbing wear and potentially heat checking or fracturing the face material. Wear of the faces then affects the fluid dynamics in the face gap through a change in the coning, causing changes in the leakoff. Fracture of the face material also affects the fluid mechanics and leads to unpredictable seal operation. In addition, pieces of face material that break off may end up in the face gap of another seal stage, causing particulate contamination and further seal failure. In 2003, Summer Unit 1 experienced a failure to pre-charge due to a blockage of the #1 seal. RCP startup attempts failed to establish any leakage across the #1 seal. Troubleshooting eventually led to a hand-rotating of the RCP at low RCS pressure, freeing the #1 seal runner and allowing the blockage to pass through the seal. After the blockage was cleared, the #1 seal operated normally.

Particulate Contamination in Water

A less common cause of out-of-specification leakage while the seal is still in stable operation is particulate contamination. Particulate contamination represents a group of problems related to the introduction of foreign components in the face gap. The foreign material can damage the seal faces or lodge in the face gap, affecting the seal's ability to freely move in order to moderate leakage. In addition, seal failures themselves may lead to particulate contamination of other seal stages if material is broken free from the seal face. It is important to note as well that particulates from outside the RCS can sometimes end up in the seal faces. Some utilities have found that particulates from the volume control tank (VCT) or seal injection lines—not just in the main RCS loop—have led to single-stage or multi-stage seal failure. In 2008, Oconee Unit 1 experienced a cascading seal stage failure partly due to particulate contamination. During coast-down before an outage, the #3 seal of an RCP exhibited failure due to heat checking caused by thermal excursions during the fuel cycle (see the following section, Pump Transients, Including Trip). The failure of the #3 seal caused heavy debris contamination in the RCS, which later traveled to the #1 and #2 seals, causing damage and excessive leakage. This failure shows that particulate contamination can arise from many sources, including damage to other seal stages. Therefore, adverse conditions that otherwise do not include particulate intrusion into the RCS may lead to seal failure if they promote fracture of a seal face.

Pump Transients, Including Trip

Pump transients affect the seal mechanism by forcing it to respond to transient temperature and pressure conditions, requiring a change from steady-state conditions (such as a stable face gap and leakage rate) and possibly contributing to unwanted seal performance or seal stage failure.

For example, in 2008, Oconee Unit 1 experienced #3 seal stage failure that then caused debris contamination and cascading failures in the #2 and #1 seals. This occurred during coast-down. During shutdown and then restart, the RCP undergoes large changes in pressure as well as changes in flow characteristics and other parameters, which may affect seal performance. In addition, seal faces may operate in face contact until pump operation is stabilized, causing significant thermal buildup in the seal faces and surrounding fixtures and presenting the opportunity for mechanical wear and face damage. The failure of the #3 seals due to heat checking created debris that migrated to the lower seal stages of the pumps, which caused them to fail catastrophically. Failure of the top last-stage rotating tungsten carbide ring resulted in debris that contributed to lower stage failures. The design of the Oconee Unit 1 seal does not encapsulate the rotating ring with metal as other designs do.

Temperature and Pressure Excursions

The RCP seals operate best when RCS conditions are stable and when the seals have reached a satisfactory, stable level of leakage. Although the seals are designed to be self-adjusting, any large or sudden change in RCS temperature or pressure forces the seals to adapt to the new operating conditions, potentially introducing a failure or an undesirable leakage rate. Excursions are often introduced due to changes in the cooling injection temperature or pump operation parameters. Some excursions may cause the seals to have a sudden change in leakage rate, only to stabilize later at a different value of leakage.

In 2009, Catawba Unit 1 was forced to shut down due to high #2 seal leakage. The cause of the high #2 leakage was determined to be elevated operating temperature of the RCP. The higher-than-normal operating temperature resulted in thermal expansion of several components and caused advanced wear on the softer graphite sealing face. The carbon face expanded and came into face contact with the harder seal ring on its outer diameter, causing wear at the outer diameter of the carbon face. The elevated temperature excursion was determined to have lasted about 36 hours, during which time the carbon face received enough wear to adversely affect its operation. Even relatively short-lived excursions during a fuel cycle can cause mechanical wear or chemical problems such as increased deposition rate of particulates. During the same post-shutdown inspection, hematite corrosion was present on the sealing faces; higher operating temperature was also found to increase the rate of conversion of iron oxide to hematite in the RCS.

4
ABNORMAL SEAL LEAKOFF MITIGATION STRATEGIES

Changing Seal Injection Water Temperature

In recommending a strategy for mitigating abnormal seal leakoff from the Westinghouse #1 seal, [11] states, "Reducing the seal injection water temperature provides a reliable and predictable first course of action in reducing seal leakoff due to the increase in the viscosity of the water passing through the seal. Conversely, in a low leaking seal, increasing the seal injection temperature can increase seal leakoff flow rate."

This recommendation is based on experience and is attributed partially to the temperature dependence of the viscosity of water. Reducing the temperature increases the viscosity, while increasing the temperature reduces the viscosity. As described previously and expressed in Equation 2-10, the leakage rate is inversely proportional to viscosity, so the temperature changes suggested above would have the desired qualitative effects. However, [11] indicates that the seal leakoff flow rate will decrease by about 0.5 gpm (1.9 lpm) for a 5°F (2.78°C) temperature decrease. For an initial temperature of 100°F (37.8°C), a 5°F (2.78°C) temperature decrease produces approximately a 3.3% increase in viscosity. For an initial seal leakoff flow rate of 3 gpm (11 lpm), such an increase in viscosity would directly account for approximately only a 0.1-gpm (0.38 lpm) decrease in flow rate.

It is believed that the seal behavior is somewhat more complicated in that several other competing effects will occur. From Equation 2-10, the leakage rate is also proportional to the average film thickness cubed, so that very small changes in film thickness will produce large changes in the leakoff. As described previously, the average film thickness will be proportional to the coning of the seal faces for a seal operating with full-film lubrication ("film-riding"), as is the case for the Westinghouse #1 seal. Therefore, the leakage rate is extremely sensitive to the face coning.

It was pointed out earlier that in most conventional commercial mechanical seals, thermal deformation results in positive coning, so that the greater the deformation, the higher the leakage rate. This is due to the heat generation in the sealing zone (the interface between the two seal faces) and is explained in [1]: "there is a large change of temperature from the face end of the ring to its opposite end. The diametric expansion of the ring at any axial position is determined primarily by the average temperature at that position. Thus, the hotter end expands more than the cooler end, and the result is a radial taper…." That radial taper is equivalent to positive coning.

It should be noted that the heat generation producing the above coning is generated by viscous dissipation (for a film-riding seal), which is proportional to viscosity. Therefore, increasing the viscosity will increase the heat generation, increase the coning, and therefore increase the leakage rate. This indirect effect of increased viscosity can outweigh the direct effect of increased viscosity discussed above. The net increase in leakage rate of a mechanical seal as a result of increased viscosity is documented in the literature [12].

In the case of the Westinghouse #1 seal, there is a third effect operating: thermal deformation of the seal faces and their holders due to the temperature difference between the surfaces on the high-pressure side of the seal and those on the low-pressure side. A finite element analysis [13] shows that the coning changes by approximately 15 microradians per °F change in the ΔT across the seal (and holders). This is quite significant in comparison with the pre-coning of the Westinghouse #1 seal faces.

Therefore, one can conclude that the mitigation of abnormal seal leakoff by changing seal injection water temperature is due to the combined effects of viscosity and thermal deformation. The net result is that reducing the seal injection water temperature reduces seal leakoff while increasing the seal injection temperature increases seal leakoff.

Key Technical Point

The reduction in leakoff by reducing the seal injection water temperature is due to the combined effects of increased viscosity and reduced thermal deformation.

A Key Technical Point in [11] states, "A caution related to cooling the seal injection water is that the seal has a short- and long-term transient temperature response. Cooling the seal injection water causes the short-term seal transient response to increase leakage (less than 0.5 gpm [1.9 lpm]), and after 30–60 minutes, the long-term seal transient response decreases the seal leakage to a new lower value."

Cooling the seal injection water will almost instantaneously increase the viscosity of the water. Therefore, the direct effect of viscosity on the leakage rate cannot be responsible for the short-term transient described above because the increased viscosity would decrease the leakage, while the short-term transient involves an increase in leakage. The only other plausible explanation is that such a transient must be produced as a result of thermal deformation because it will take time for the thermal field and the deformations of the seal faces, the holders, and the shaft (contraction/expansion) to reach a steady state.

Changes in the seal injection water temperature can have other secondary effects. As mentioned previously, electrophoresis is sensitive to temperature, such that a decrease in the injection water temperature will reduce the deposition of material on the faces, while an increase in injection water temperature will increase the deposition. Changes in injection water temperature can also affect the operation of the #2 and #3 seals through thermal deformation effects.

Changing the seal injection water temperature should be effective in mitigating abnormal seal leakoff whether the cause of such abnormal leakoff is the wear of the seal faces, off-design operating conditions, or electrophoresis.

Replacing Seal Injection Filters, Reactor Makeup Water Methodology, and Changing Reactor Coolant System Chemistry

As discussed previously, electrophoresis is frequently a cause of abnormal seal leakoff. The deposition of material on the seal faces changes their geometry and alters the flow through the sealing zone. The deposited material can increase or decrease the coning of the faces, increasing

or decreasing the film thickness, resulting in increased or decreased leakage. Nonuniform deposition in the circumferential direction can lead to hydrodynamically increased pressures in the sealing zone, resulting in an increased film thickness and increased leakoff.

Key Technical Point

By eliminating or reducing electrophoresis, the seal face geometry is allowed to remain in its original form with optimal seal leakoff.

Replacing or swapping seal injection filters, altering reactor makeup water methodology, and changing reactor coolant system chemistry can mitigate or partially reverse the effects of electrophoresis, as discussed in [11]. Replacing the seal injection filters with smaller filter media reduces the particulates entering the seal. Although not always effective, swapping filters is often beneficial due to several factors enumerated in [11]:

- The spare filter is typically maintained in a relatively cool filter pit, with boron concentrations from the last time the filter was used or flushed and with oxygen or other dissolved gases corresponding with the last time it was opened or maintained.
- When placed into service, the cool, oxygenated water (oxidizing) with a higher boron concentration (more acidic pH) goes to the seals and chemically flushes out deposits that may be causing the leakoff change.
- A 2.4-gpm (9.0-lpm) leakoff decrease was observed in one recorded example. This effect varies on the seal leakoff flow rate being experienced, but typically a 1.0-gpm (3.8-lpm) change could be expected.
- Because the pH varies with temperature, the cooler the standby filter injection water, the more acidic the water. In addition, cooler water will hold larger quantities of dissolved oxygen.

Therefore, these measures can mitigate abnormal seal leakoff by eliminating the root cause. However, it is important to note that they are effective only when the cause of abnormal seal leakoff is electrophoresis.

Key Technical Point

Replacing seal injection filters, altering makeup water methodology, and changing reactor coolant system chemistry can be effective mitigation methods only when the cause of abnormal seal leakoff is electrophoresis.

5
REFERENCES

1. Alan O. Lebeck. *Principles and Design of Mechanical Face Seals*. Wiley-Interscience, New York 1991.
2. J. D. Summers-Smith (Ed.). *Mechanical Seal Practice for Improved Performance*. Mechanical Engineering Publications for The Institution of Mechanical Engineers, London 1992, pp. 59–63.
3. W. E. Key, R. F. Salant, P. Payvar, S. Gopalakrishnan, and G. Vaghasia, "Analysis of a Mechanical Seal with Deep Hydropads," *STLE Tribology Transactions*, Vol. 32, pp. 481–489 (1989).
4. H. K. Müller and B. S. Nau. *Fluid Sealing Technology*. Marcel Dekker, New York 1998, p. 241.
5. D. B. Rhodes, R. C. Hill, and R. G. Wensel, Reactor Coolant Pump Shaft Seal Stability During Station Blackout, NUREG/CR-4821, May 1987.
6. W. F. Hughes, P. Basu, P. A. Beatty, R. M. Beeler, and S. Lau, "Dynamics of Face and Annular Seals with Two-Phase Flow," *NASA Contractor Report 4256*, October 1989.
7. W. F. Hughes, N. S. Winowich, M. J. Birchak, and W. C. Kennedy, "Phase Change in Liquid Face Seals," *ASME Journal of Lubrication Technology*, Vol. 100, pp. 74–80 (1978).
8. W. F. Hughes and N. H. Chao, "Phase Change in Liquid Face Seals II – Isothermal and Adiabatic Bounds with Real Fluids, *ASME Journal of Lubrication Technology*, Vol. 102, pp. 350–359 (1980).
9. R. F. Salant and D. A. Blasbalg, "Dynamic Behavior of Two-Phase Mechanical Seals," *STLE Tribology Transactions*, Vol. 34, pp. 122–130 (1991).
10. D. A. Blasbalg and R. F. Salant, "Numerical Study of Two-Phase Mechanical Seal Stability," *STLE Tribology Transactions*, Vol. 38, pp. 791–800 (1995).
11. *Nuclear Maintenance Applications Center: Westinghouse Reactor Coolant Pump Seal Maintenance Guide*. EPRI, Palo Alto, CA: 2010. 1022315.
12. R. F. Salant and W. E. Key, "Development of an Analytical Model for Use in Mechanical Seal Design," *Proceedings of the 10th International Conference on Fluid Sealing*, Innsbruck, Austria (1984), pp. 325–343.
13. T. Boardman, N. Jeanmougin, R. Lofaro, and J. Prevost, Leak Rate Analysis of the Westinghouse Reactor Coolant Pump, NUREG/CR-4294, July 1985.

A
KEY POINTS SUMMARY

Key Technical Point

Targets information that will lead to improved equipment reliability.

Key Technical Points

Page	Key Point
2-2	If the lubricating film thickness between the adjoining seal faces is larger than approximately three times the rms roughness, there is full-film lubrication. If the film is thinner, there is mixed lubrication.
2-3	For the RCP application, minimal leakage is not as important as predictable and reliable performance.
2-8	The lubricating film thickness is proportional to the coning; the larger the coning, the thicker the film.
2-8	Leakage is inversely proportional to the viscosity and proportional to the cube of the film thickness, so it is very sensitive to the coning.
2-9	Although the Westinghouse #1 seal is pre-coned to a specified taper, the coning will be affected by mechanical and thermal deformation and will differ from the nominal value under pressurized dynamic conditions.
2-11	Changes in operating conditions will lead to changes in mechanical and thermal deformation, coning film thickness, and leakage rate. In addition, electrophoresis will change the coning, film thickness, and leakage rate.
4-2	The reduction in leakoff by reducing the seal injection water temperature is due to the combined effects of increased viscosity and reduced thermal deformation.
4-3	By eliminating or reducing electrophoresis, the seal face geometry is allowed to remain in its original form with optimal seal leakoff.
4-3	Replacing seal injection filters, altering makeup water methodology, and changing reactor coolant system chemistry can be effective mitigation methods only when the cause of abnormal seal leakoff is electrophoresis.

B
SEAL DRAWINGS

Figures A-1 through A-4 show schematics of the Westinghouse #1, #2, and #3 seals and the complete Westinghouse seal system.

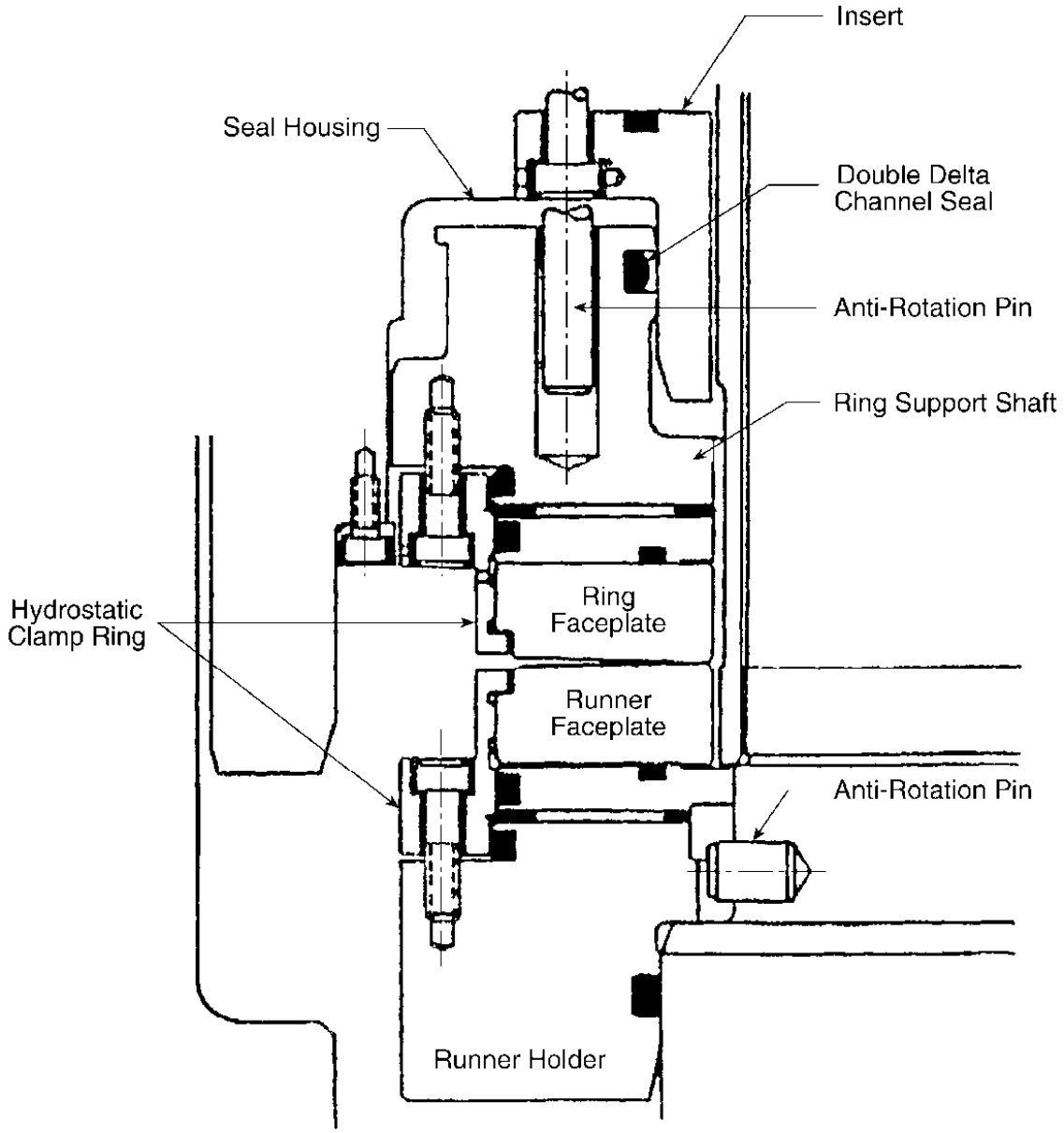

Figure B-1
Westinghouse #1 Seal [11]

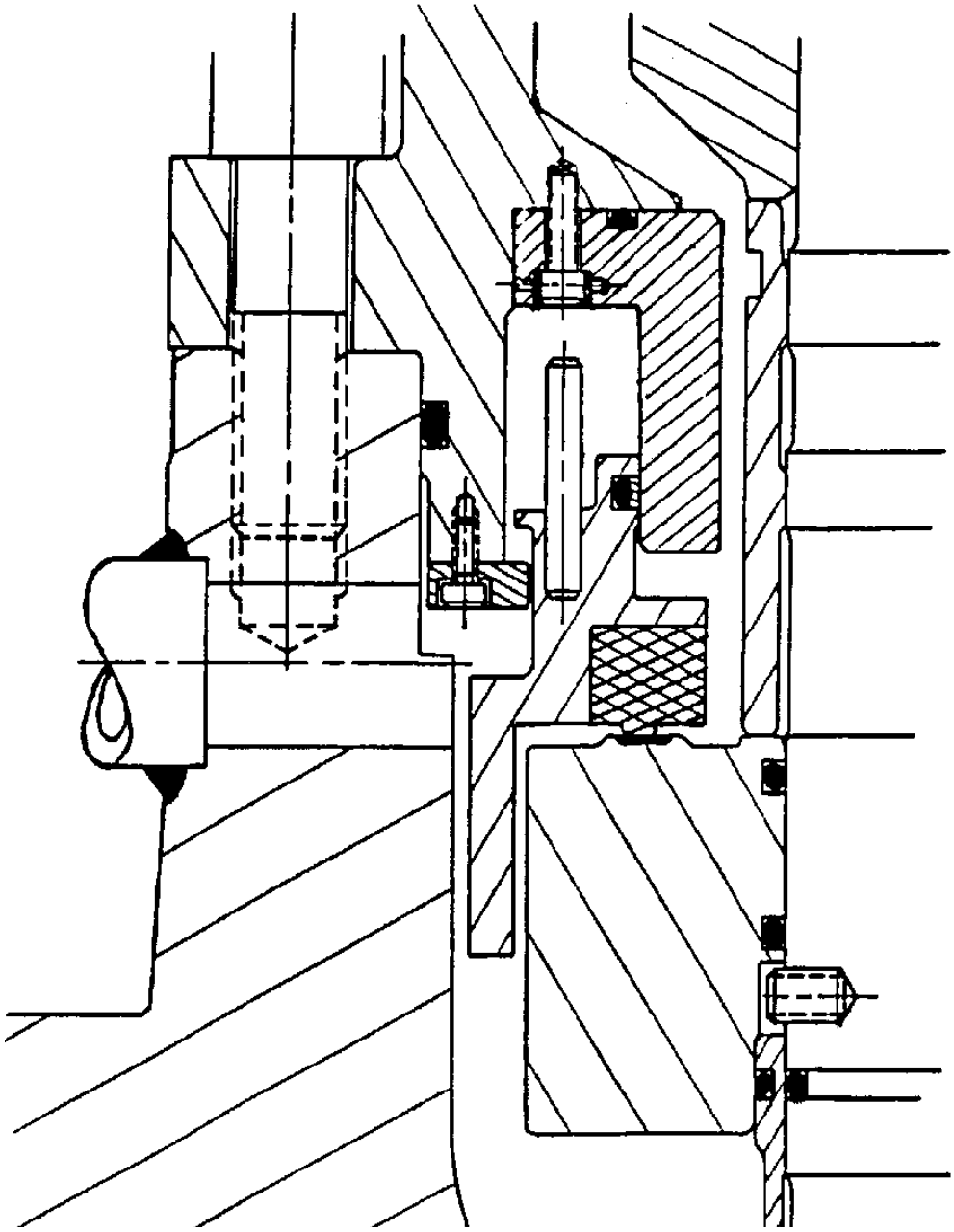

Figure B-2
Westinghouse #2 Seal [11]

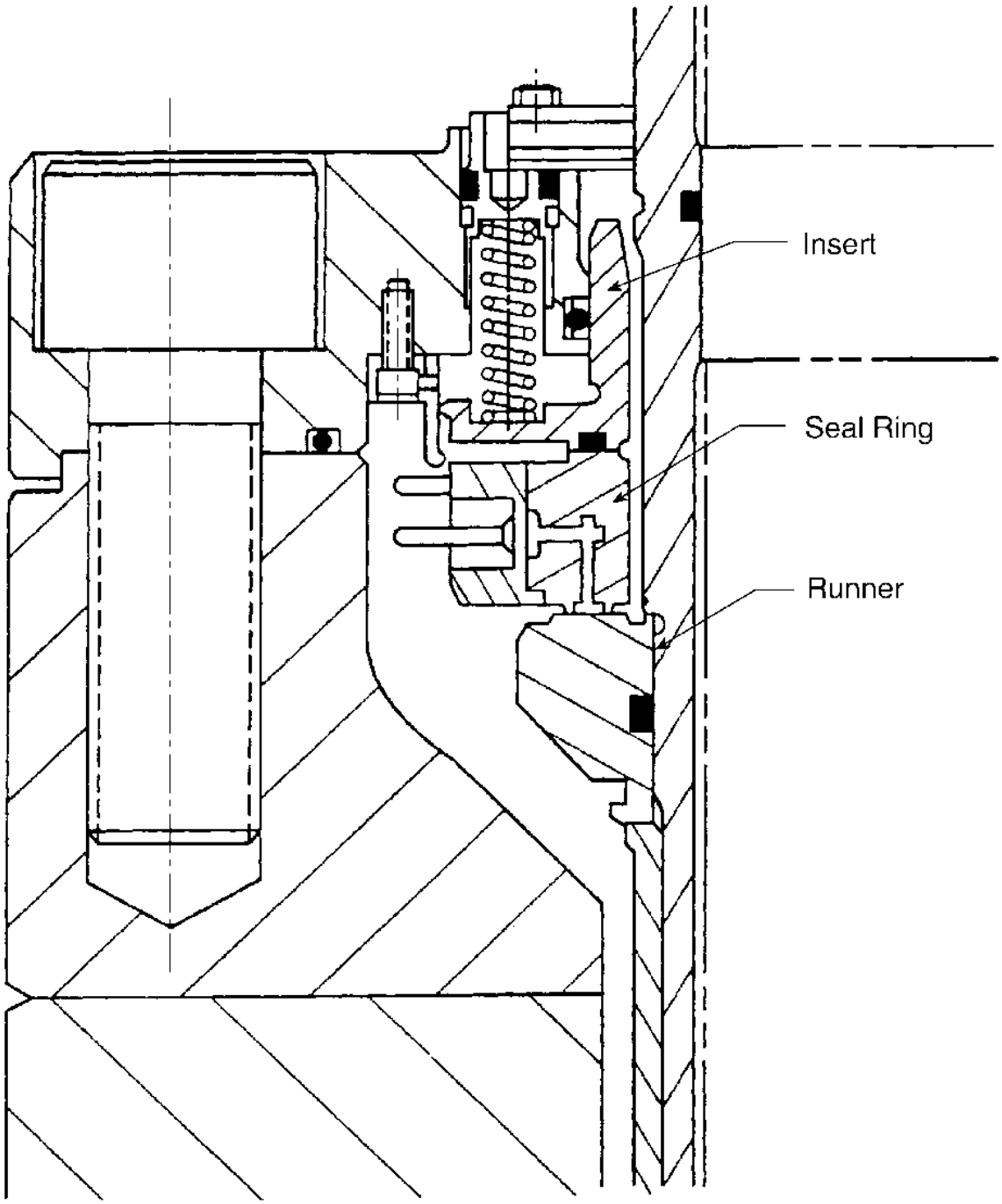

Figure B-3
Westinghouse #3 Seal (Double Dam) [11]

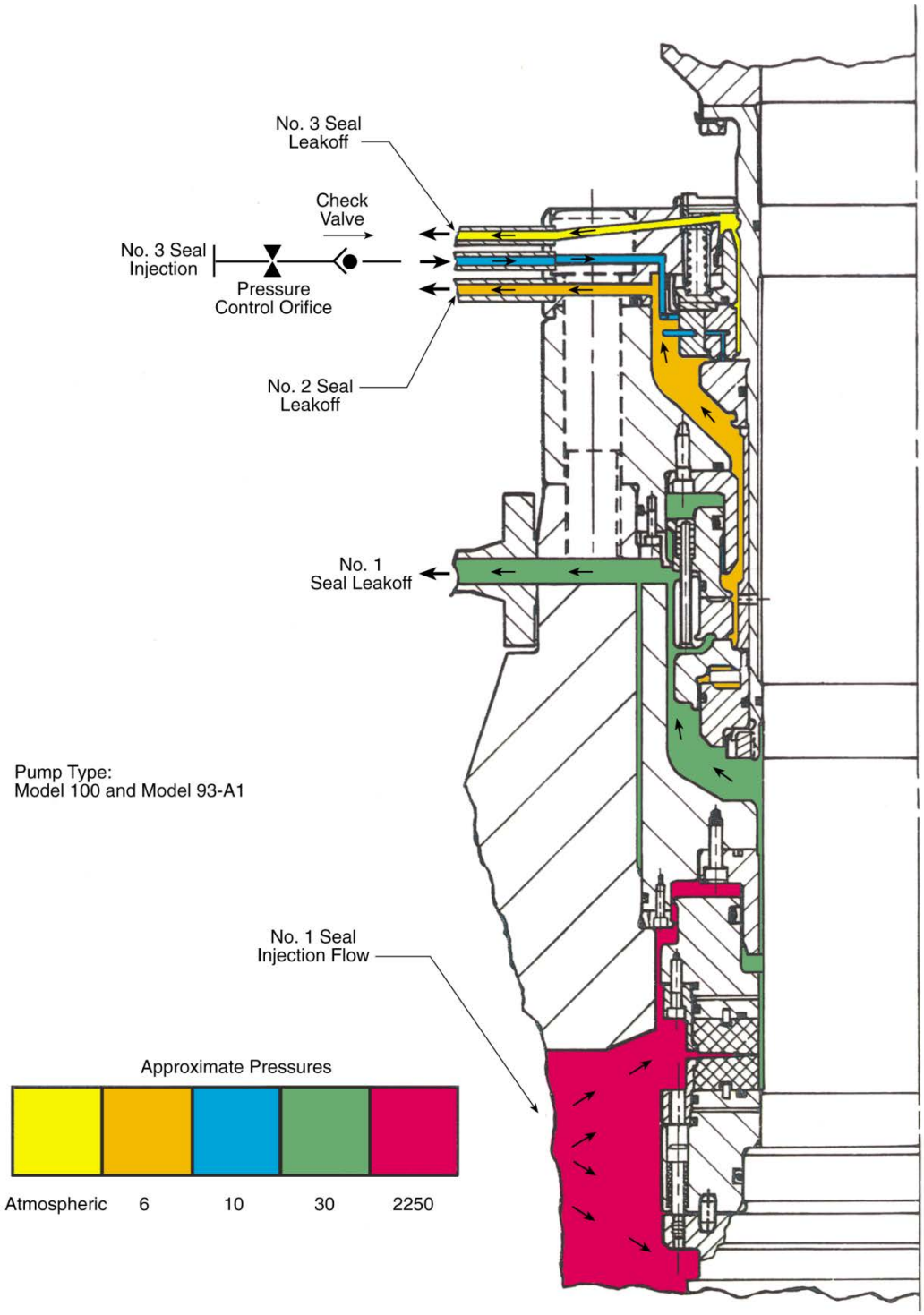

Figure B-4
Example of Westinghouse Seal Assembly, Pump Type Model 100 and Model 93-A1 [11]

Export Control Restrictions

Access to and use of EPRI Intellectual Property is granted with the specific understanding and requirement that responsibility for ensuring full compliance with all applicable U.S. and foreign export laws and regulations is being undertaken by you and your company. This includes an obligation to ensure that any individual receiving access hereunder who is not a U.S. citizen or permanent U.S. resident is permitted access under applicable U.S. and foreign export laws and regulations. In the event you are uncertain whether you or your company may lawfully obtain access to this EPRI Intellectual Property, you acknowledge that it is your obligation to consult with your company's legal counsel to determine whether this access is lawful. Although EPRI may make available on a case-by-case basis an informal assessment of the applicable U.S. export classification for specific EPRI Intellectual Property, you and your company acknowledge that this assessment is solely for informational purposes and not for reliance purposes. You and your company acknowledge that it is still the obligation of you and your company to make your own assessment of the applicable U.S. export classification and ensure compliance accordingly. You and your company understand and acknowledge your obligations to make a prompt report to EPRI and the appropriate authorities regarding any access to or use of EPRI Intellectual Property hereunder that may be in violation of applicable U.S. or foreign export laws or regulations.

The Electric Power Research Institute Inc., (EPRI, www.epri.com) conducts research and development relating to the generation, delivery and use of electricity for the benefit of the public. An independent, nonprofit organization, EPRI brings together its scientists and engineers as well as experts from academia and industry to help address challenges in electricity, including reliability, efficiency, health, safety and the environment. EPRI also provides technology, policy and economic analyses to drive long-range research and development planning, and supports research in emerging technologies. EPRI's members represent more than 90 percent of the electricity generated and delivered in the United States, and international participation extends to 40 countries. EPRI's principal offices and laboratories are located in Palo Alto, Calif.; Charlotte, N.C.; Knoxville, Tenn.; and Lenox, Mass.

Together…Shaping the Future of Electricity

© 2012 Electric Power Research Institute (EPRI), Inc. All rights reserved.
Electric Power Research Institute, EPRI, and TOGETHER…SHAPING THE FUTURE OF ELECTRICITY are registered service marks of the Electric Power Research Institute, Inc.

1025765

Electric Power Research Institute
3420 Hillview Avenue, Palo Alto, California 94304-1338 • PO Box 10412, Palo Alto, California 94303-0813 • USA
800.313.3774 • 650.855.2121 • askepri@epri.com • www.epri.com