EPRI | ELECTRIC POWER RESEARCH INSTITUTE

Generation Maintenance Applications Center: Combined-Cycle Combustion Turbine Lube Oil System Maintenance Guide

2012 TECHNICAL REPORT

Generation Maintenance Applications Center: Combined-Cycle Combustion Turbine Lube Oil System Maintenance Guide

EPRI Project Manager
R. Roberts

EPRI | ELECTRIC POWER RESEARCH INSTITUTE

3420 Hillview Avenue
Palo Alto, CA 94304-1338
USA

PO Box 10412
Palo Alto, CA 94303-0813
USA

800.313.3774
650.855.2121

askepri@epri.com

www.epri.com

1026605
Final Report, October 2012

DISCLAIMER OF WARRANTIES AND LIMITATION OF LIABILITIES

THIS DOCUMENT WAS PREPARED BY THE ORGANIZATION NAMED BELOW AS AN ACCOUNT OF WORK SPONSORED OR COSPONSORED BY THE ELECTRIC POWER RESEARCH INSTITUTE, INC. (EPRI). NEITHER EPRI, ANY MEMBER OF EPRI, ANY COSPONSOR, THE ORGANIZATION(S) BELOW, NOR ANY PERSON ACTING ON BEHALF OF ANY OF THEM:

(A) MAKES ANY WARRANTY OR REPRESENTATION WHATSOEVER, EXPRESS OR IMPLIED, (I) WITH RESPECT TO THE USE OF ANY INFORMATION, APPARATUS, METHOD, PROCESS, OR SIMILAR ITEM DISCLOSED IN THIS DOCUMENT, INCLUDING MERCHANTABILITY AND FITNESS FOR A PARTICULAR PURPOSE, OR (II) THAT SUCH USE DOES NOT INFRINGE ON OR INTERFERE WITH PRIVATELY OWNED RIGHTS, INCLUDING ANY PARTY'S INTELLECTUAL PROPERTY, OR (III) THAT THIS DOCUMENT IS SUITABLE TO ANY PARTICULAR USER'S CIRCUMSTANCE; OR

(B) ASSUMES RESPONSIBILITY FOR ANY DAMAGES OR OTHER LIABILITY WHATSOEVER (INCLUDING ANY CONSEQUENTIAL DAMAGES, EVEN IF EPRI OR ANY EPRI REPRESENTATIVE HAS BEEN ADVISED OF THE POSSIBILITY OF SUCH DAMAGES) RESULTING FROM YOUR SELECTION OR USE OF THIS DOCUMENT OR ANY INFORMATION, APPARATUS, METHOD, PROCESS, OR SIMILAR ITEM DISCLOSED IN THIS DOCUMENT.

REFERENCE HEREIN TO ANY SPECIFIC COMMERCIAL PRODUCT, PROCESS, OR SERVICE BY ITS TRADE NAME, TRADEMARK, MANUFACTURER, OR OTHERWISE, DOES NOT NECESSARILY CONSTITUTE OR IMPLY ITS ENDORSEMENT, RECOMMENDATION, OR FAVORING BY EPRI.

THE FOLLOWING ORGANIZATION, UNDER CONTRACT TO EPRI, PREPARED THIS REPORT:

Power Plant Professionals

NOTE

For further information about EPRI, call the EPRI Customer Assistance Center at 800.313.3774 or e-mail askepri@epri.com.

Electric Power Research Institute, EPRI, and TOGETHER…SHAPING THE FUTURE OF ELECTRICITY are registered service marks of the Electric Power Research Institute, Inc.

Copyright © 2012 Electric Power Research Institute, Inc. All rights reserved.

Acknowledgments

The following organization, under contract to the Electric Power Research Institute (EPRI), prepared this report:

Power Plant Professionals, LLC
975 Market Street, Suite 201D
Fort Mill, SC 29708

Principal Investigators
S. Parker
W. Eargle

This report describes research sponsored by EPRI.

EPRI's Generation Maintenance Applications Center (GenMAC) program would like to acknowledge the support of the following technical advisory group (TAG) members for their contributions during the development of this report:

John Broughton	We Energies
Doug Herzog	We Energies
Peter Kolbach	We Energies
Pete Kutzora	We Energies
Michael Laven	We Energies
Randy Lawrie	Xcel Energy Services
Dawn Lemke	We Energies

This publication is a corporate document that should be cited in the literature in the following manner:

Generation Maintenance Applications Center: Combined-Cycle Combustion Turbine Lube Oil System Maintenance Guide. EPRI, Palo Alto, CA: 2012. 1026605.

Product Description

The combustion turbine lubrication system provides clean oil to the turbine-generator bearings, the generator seal oil system, the trip oil system, and the hydraulic system at the required pressures and temperatures. It is an essential system that reduces friction between rubbing surfaces such as bearings, couplings, and gears; removes heat created by the friction of rubbing surfaces; removes contaminants from bearings while cleaning the oil; and provides a medium for exerting pressure on control systems and sealing apparatus. The intent of this report is to cover the maintenance of the major components of the lubrication system, up to but not including the equipment that oil is being supplied to. The report provides an explanation of the combined-cycle plant lubrication system and guidance on how to maintain it. It is intended to enhance and ensure the safe, efficient, and cost-effective operation and maintenance of the equipment.

Background

Combustion turbine combined-cycle (CTCC) units use various equipment and components that are unique to their power generation plants. This report is part of a larger effort to provide maintenance guidance for the CTCC equipment that is not found at a nuclear or fossil power plant site. The intent of the report is to provide maintenance information for the lubrication system for the combustion turbine at CTCC sites. It draws heavily from the EPRI Preventive Maintenance Basis Database (PMBD), which is the current repository for maintenance information for power plants. Equipment additions to the PMBD for CTCC units are projects funded by the Generation Maintenance Applications Center (GenMAC).

Objectives

- To provide component-level information on the turbine-generator lubrication system, including the seal-oil system, the trip-oil system, and the hydraulic oil system
- To provide functional details that go beyond what most original equipment manufacturers provide
- To provide recommendations on preventive maintenance routines using EPRI's failure modes determination

- To provide access to knowledge and support for routine maintenance issues
- To develop and preserve equipment and maintenance knowledge for current and future workers

Approach

The approach used in developing this report included researching the existing industry information on the lubrication systems for combustion turbines. This information included EPRI reports, the GE MS 7001FA+E Combined Cycle Training Program (EPRI simulator training), EPRI's Preventive Maintenance Basis Database (PMBD), and manufacturers' literature. The approach also included review by experts within member utilities.

Information on the lubrication system of the combustion turbine was not as available as comparable information for the steam turbine. The detailed information provided for the combustion turbine was centered on the GE 7FA Gas Turbine.

The intent was to cover the maintenance of the major components of the lubrication system, up to but not including the equipment that oil is being supplied to. For example, the lubrication system provides oil to the turbine and generator bearings. The bearings are not covered in this report, as they are the equipment oil is supplied to.

Results

This report addresses component-level reliability issues by identifying improvements in maintenance and operational actions and by providing an enhanced maintenance basis for them.

Applications, Value, and Use

The information in this report will assist combined-cycle facilities that have operational and maintenance issues with their lubrication systems. The report will also be useful in the training of new employees.

Keywords

Lubrication system
Combustion turbine
Preventive maintenance
Equipment reliability
Oil system

Abstract

This technical report's objectives included the following:

- To provide component-level information on the turbine-generator lubrication system including the seal-oil system, the trip-oil system, and the hydraulic oil system
- To provide functional details that go beyond what most original equipment manufacturers provide
- To provide recommendations on preventive maintenance routines using EPRI's failure modes determination
- To provide access to knowledge and support for routine maintenance issues
- To develop and preserve equipment and maintenance knowledge for current and future workers

The approach used in developing this report included researching the existing industry information on the lubrication systems for combustion turbines. The industry information included EPRI reports, the GE MS 7001FA+E Combined Cycle Training Program (EPRI Simulator Training), EPRI's Preventive Maintenance Basis Database (PMBD), and manufacturer's literature. The approach also included review by experts within member utilities.

The intent was to cover the maintenance of the major components of the lubrication system, up to but not including the equipment that oil is being supplied to. For example, the lubrication system provides oil to the turbine and generator bearings. The bearings are not covered in this report, as they are the equipment oil is supplied to. For the generator seal oil system, the report does not include the hydrogen seals but does cover the conditioning of the oil before it is returned to the oil tank. For the trip oil system, the servo-valves and relay valves are not covered. For the hydraulic system, the hydraulic cylinders of the fuel and air valves are not covered. For the rotor lift oil system, the bearings and rotor are not covered. However, the components for the hydraulic oil system (pumps, motors, and so on) were included in this report.

This report addresses component-level reliability issues by identifying improvements in maintenance and operational actions and by providing an enhanced maintenance basis for them.

Table of Contents

Section 1: Introduction 1-1
1.1 Background 1-1
1.2 Approach 1-1
1.3 Organization 1-2

Section 2: Glossary 2-1
2.1 Definitions 2-1
2.2 Acronyms 2-2

Section 3: System Application 3-1
3.1 General System Function 3-1
3.2 Lubrication System and Components 3-2
3.2.1 Seal Oil System 3-6
3.2.2 Trip Oil System 3-7
3.2.3 Hydraulic Oil System 3-9
3.3 Operational Considerations 3-13
3.3.1 Inspection for Leaks 3-13
3.3.2 Oil Operating Temperatures 3-13
3.3.3 Transfer Operations 3-14
3.3.4 Extended Shutdown 3-15
3.4 Personnel Qualifications and Training 3-16
3.4.1 Combustion Turbine Lubrication System Operator Tasks 3-17

Section 4: Technical Description 4-1
4.1 Lubrication System Components 4-1

Section 5: Preventive Maintenance 5-1
5.1 Component Preventive and Predictive Maintenance Tasks 5-2
5.2 Component Testing 5-19
5.3 Monitoring the Lubrication System 5-21
5.4 Lube Oil Sampling, Testing, and Analysis 5-25
5.4.1 Oil Sampling 5-26

5.4.2 Oil Testing 5-28
5.4.3 Oil Analysis 5-30
5.5 Storage and Handling of Lubricants 5-35
5.6 Oil Flushing.....5-35

Section 6: Preventive Maintenance Basis Database.....6-1
6.1 PMBD Tables.....6-2
6.2 PM Tasks and Objectives 6-56
6.3 PM Task Summary.....6-65

Section 7: Component Maintenance 7-1

Section 8: Troubleshooting.....8-1

Section 9: References.....9-1

List of Figures

Figure 3-1 Combustion turbine lubrication system schematic 3-2
Figure 3-2 The oil tank: a) typical top view; b) typical side view 3-4
Figure 3-3 Seal oil system schematic.....3-7
Figure 3-4 Trip oil system schematic.....3-8
Figure 3-5 Hydraulic oil system schematic 3-10
Figure 3-6 Lift oil system schematic 3-12
Figure 4-1 A motor-driven auxiliary oil pump 4-4
Figure 4-2 An in-line seal oil pump and motor arrangement.....4-6

List of Tables

Table 4-1 Typical settings for lubrication system instrumentation 4-8

Table 5-1 Recommended oil system condition monitoring 5-22

Table 5-2 Used oil analysis guidelines 5-29

Table 5-3 Troubleshooting for degraded physical properties in turbine lubrication oil 5-31

Table 6-1 Plate and frame heat exchanger information from the Preventive Maintenance Basis Database 6-3

Table 6-2 Bearing oil pump and AC motor information from the Preventive Maintenance Basis Database 6-5

Table 6-3 Seal oil pump and AC and DC motor information from the Preventive Maintenance Basis Database 6-17

Table 6-4 Lubrication supply component information from the Preventive Maintenance Basis Database 6-34

Table 6-5 Emergency oil pump and DC motor information from the Preventive Maintenance Basis Database 6-43

Table 6-6 PM tasks and corresponding frequencies 6-66

Table 8-1 Troubleshooting for the combustion turbine lubrication system 8-2

Section 1: Introduction

1.1 Background

Combustion turbine combined-cycle (CTCC) units use various equipment and components that are unique to their power generation plants. This report is part of a larger effort to provide maintenance guidance for the CTCC equipment that is not found at a nuclear or fossil power plant site. The intent of the report is to provide maintenance information for the lubrication system for the combustion turbine at CTCC sites.

The maintenance guidance is intended to enhance and ensure the safe, efficient, and cost-effective operation and maintenance of the equipment. The current repository for maintenance information for the CTCC plants is the EPRI Preventive Maintenance Basis Database (PMBD). Equipment additions to the PMBD for CTCC units are projects funded by the Generation Maintenance Applications Center.

1.2 Approach

The approach used in developing this report included researching the existing industry information on the lubrication systems for the combustion turbine. The industry information included EPRI reports, the GE MS 7001FA+E Combined Cycle Training Program (EPRI simulator training), EPRI's PMBD, and manufacturers' literature.

Information on the lubrication system of the combustion turbine was not as available as comparable information for the steam turbine. The detailed information provided for the combustion turbine was centered on the GE 7FA Gas Turbine.

The combustion turbine lubrication system provides oil to the turbine-generator bearings, the generator seal oil system, the trip oil system, and the hydraulic system (for controlling the air inlet valves, the fuel control valves, and the rotor lift oil system). The intent of this report was to cover the maintenance of the major components of the lubrication system, up to but not including the equipment that oil is being supplied to. For example, the lubrication system provides oil to the turbine and generator bearings. The bearings are not covered in this report, as they are the equipment oil is supplied to. For the generator seal oil system, the report does not include the hydrogen seals but does cover the conditioning of the oil before it is returned to the oil tank. For the trip oil system,

the servo-valves and relay valves are not covered. For the hydraulic system, the hydraulic cylinders of the fuel and air valves are not covered. For the rotor lift oil system, the bearings and rotor are not covered. However, the components for the hydraulic oil system (pumps, motors, and so on) were included in this report.

The words *combustion turbine* and *gas turbine* are used interchangeably in this report. The word *combustion turbine* (CT) was preferred because the fuel used can be gas, fuel oil, or both. The abbreviation for the word *lubrication* is the word *lube,* and this abbreviation is used throughout the report.

Many lubrication systems have a conditioning system that removes water and contaminants from the oil. These systems are not manufactured by the combustion turbine manufacturer and are of various types and designs. If the unit has a conditioning system, then the manufacturer's literature was included in the combustion turbine instruction book. Because of the various types and vendors for the conditioning system, this equipment was not included in this report.

The topic of oil flushes was not covered in detail in this report. The CT manufacturer typically provides detailed instructions on performing an oil flush at the conclusion of a major inspection.

1.3 Organization

This report consists of the following sections:

- **Section 1, Introduction.** This section includes the background, approach, and organization of the report.
- **Section 2, Glossary.** This section includes the definitions and acronyms used in the report.
- **Section 3, System Application.** This section includes a description of the general system function, lubrication system and components (including the seal oil system, trip oil system, and hydraulic oil system), operational considerations (including inspection for leaks, oil operating temperature, transfer operations, and extended shutdown), and personnel qualifications and training (including combustion turbine lubrication system tasks).
- **Section 4, Technical Description.** This section includes a description of the lubrication system components.
- **Section 5, Preventive Maintenance**. This section includes component preventive and predictive maintenance tasks; component testing; monitoring of the lubrication system; lube oil sampling, testing, and analysis (including oil system varnish); storage and handling of lubrications; and oil flushing.
- **Section 6, Preventive Maintenance Basis Database**. This section includes PMBD tables, preventive maintenance (PM) task objectives, and a PM task summary.
- **Section 7, Component Maintenance.** This section includes repair/replace recommendations for the lubrication system components.

- **Section 8, Troubleshooting.** This section includes a table of the components, symptoms, causes, and corrective actions for troubleshooting the lubrication system.
- **Section 9, References.** This section includes the sources used in preparing the report.

Section 2: Glossary

2.1 Definitions

Detraining – Detraining is a process of separating the oil and the air or hydrogen entrained in the oil.

Duplex arrangement – Duplex arrangement is redundant, side-by-side strainers or filters provided in a common housing. The strainers/filters may be interconnected so that service may be transferred from one to the other by means of a transfer valve without interrupting the oil flow.

Filtration equipment – Filtration equipment includes strainers and filters that remove particulate matter, debris, and solid contaminants from the oil circulated through the oil system.

Flush – An oil flush is an organized sequence of events including intrusive techniques and processes initiated to establish or restore a predetermined level of lubrication system cleanliness. Turbine-generator lubricating oil flushes require a high degree of preparation, coordination, and control to safely obtain the desired results.

Flush screens and strainers – Flush screens and/or strainers are used specifically to support a lubricating oil system flush. The flush screens/strainers are frequently installed in the oil tank drain-back overflow openings prior to flush and removed upon completion.

Hammerblow – Hammerblow operation mimics the motion of a hammer striking an anvil and delivers a quick, measured blow to free up a sticky valve without damaging the internal or external valve parts.

Hydrogen detraining tank or trap drain – The hydrogen detraining tank/trap drain is a tank/trap arrangement located between the bearing drains of the hydrogen-cooled generator and the turbine's bearing drain lines returning to the oil tank. The tank/trap serves the purpose of removing any hydrogen in the oil and keeping it out of the oil system.

Inlet guide vanes – The inlet guide vanes direct and control the air flow to the first stage of the axial flow compressor of the combustion turbine. These vanes are positioned by a hydraulic cylinder located on the turbine base.

Lube – *Lube* is a shortened replacement term for *lubrication* or *lubricating*.

Mesh – Mesh describes the open spaces of the screen/strainer wire. In general, the lower the mesh number, the larger the open flow area (that is, the larger the space between the wires). Higher mesh sizes are used for oil flushes.

Microbiological growth – Microbiological growth is the growth of bacterial colonies in the oil. The bacteria can be heterotrophic bacteria that reduce the carbon in the oil, or they can be anaerobic, sulfate-reducing bacteria that live in the boundary regions of an oil/water interface. For bacterial growth to occur, generally water must be present in the oil and the water located in an area where there is relatively stagnant flow.

Standby – Standby is a term describing the status of equipment that is available but not in service. For some equipment, standby operation may be automatically initiated by the control system (for example, oil pumps).

Viscosity – Viscosity is a measurement of the oil's resistance to flow. Viscosity varies inversely with temperature, and viscosity is reported with the temperature value.

2.2 Acronyms

AC	Alternating Current
ASTM	American Society for Testing and Materials
CT	Combustion Turbine
CTCC	Combustion Turbine Combined-Cycle
DC	Direct Current
EPRI	Electric Power Research Institute
GE	General Electric
ISO	International Standards Organization
MSDS	Material Safety Data Sheet
NIST	National Institute of Standards and Technology
NPSHA	Net Positive Suction Head Available
PdM	Predictive Maintenance
PM	Preventive Maintenance
PMBD	Preventive Maintenance Basis Database

Psid	Pressure in pounds per square inch differential
Psig	Pressure in pounds per square inch gauge
RTD	Resistance temperature detector

Section 3: System Application

3.1 General System Function

The purpose of the combustion turbine-generator lubrication system is to provide clean oil at the required pressures and temperatures to the turbine and generator bearings, generator seal oil system, trip oil system, and hydraulic system (for controlling the air inlet valves, the fuel control valves, and the rotor lift oil system).

For the bearing lubrication, the lubrication system provides the necessary oil flow for a hydrodynamic wedge between the rotating rotors and the stationary bearings. The oil wedge supports the rotor weight and provides a separation of the rotating and stationary components. This separation ensures the integrity of the bearing and rotor surfaces. The heat from the bearing and rotor surfaces is transferred to the oil. The oil flow provides a cooling medium for these surfaces by taking the heat away.

The lubrication system provides seal oil to the generator casing seals. This seal oil enables the retention of the hydrogen cooling gas inside the generator casing and prevents the ingress of air, water, and contaminants into the generator casing.

Oil is sent to the trip oil system to operate the trip relays and the servo-valves for controlling the inlet guide vane (which allows air flow to the compressor inlet), the stop/speed ratio valve, and the gas/fuel oil control valves.

Lubrication oil is sent to the hydraulic system that contains piston pumps, motors, filters, and an accumulator. The pumps and motors provide higher-pressure oil for the rotor lift oil system. It is necessary to lift the rotor off the bearings before turning gear operation begins. The lift oil pressure performs this function. Lower-pressure hydraulic oil pressure is used to operate the trip relay, servo-valve, and hydraulic cylinders for air inlet guide vane, stop/speed ratio valve, and the gas/fuel oil control valves.

The oil lubrication system is required to be in service prior to startup, when the unit is on turning gear, during normal operations, during normal shutdown, and for turbine trips from abnormal or emergency conditions. The lubrication system is usually supplied with the turbine by the turbine manufacturer.

Figure 3-1 shows a schematic of the combustion turbine lubrication system.

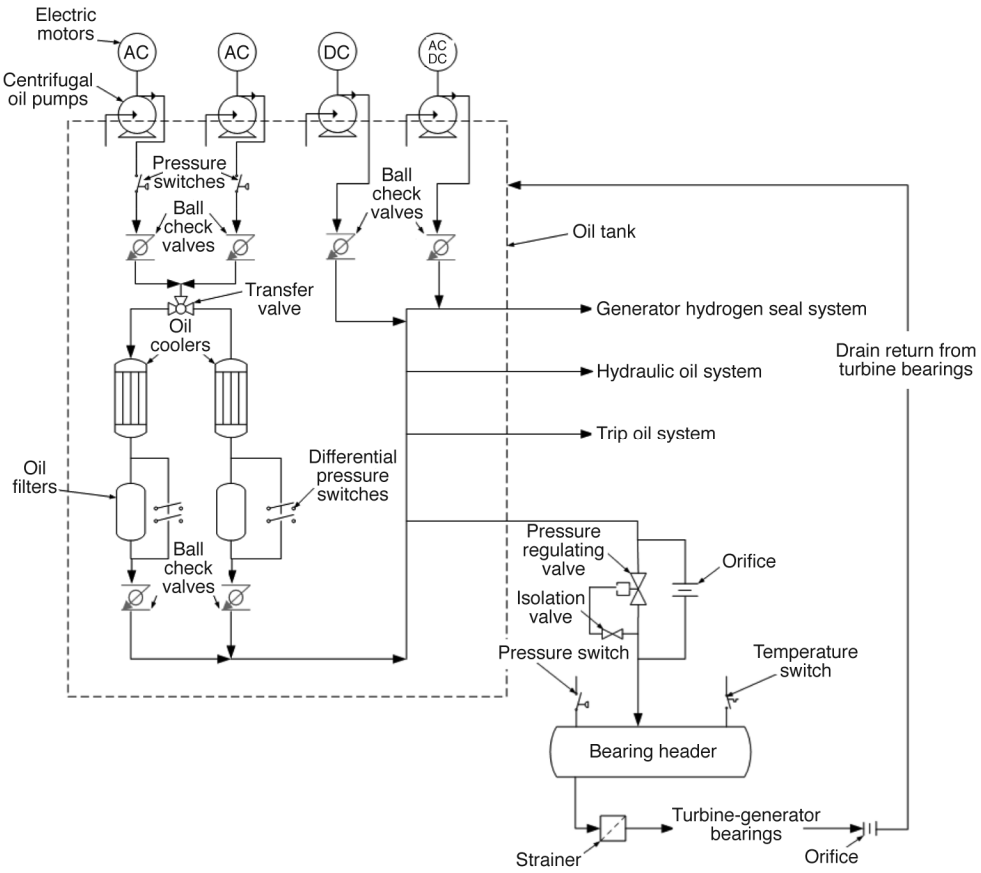

Figure 3-1
Combustion turbine lubrication system schematic

3.2 Lubrication System and Components

There are five separate oil systems for the combustion turbine lubrication system. The oil system functions are to provide the following:

- Bearing oil to the turbine and generator bearings
- Seal oil to the generator hydrogen sealing system
- Trip oil to the relays and servo-valves for the air and fuel control valves
- Hydraulic oil to the trip relays, servo-valves, and actuating cylinders for controlling the air and fuel control valves
- Hydraulic lift oil to the bearing lift pumps for raising the rotors off the bearing surfaces prior to rotor rotation

The combustion turbine lubrication system is housed in a module or skid. The module contains the following components:

- Oil tank (reservoir)
- Immersion heaters
- Vapor extractor/mist eliminator
- Bearing oil pumps
- Bearing oil pump AC motors
- Emergency bearing oil pump
- Emergency bearing oil pump DC motor
- Seal oil pump
- Seal oil pump AC motor
- Seal oil pump DC motor
- Oil coolers
- Oil filters
- Instrumentation
- Valves
- Hydraulic system equipment – piston oil pumps, AC motors, filters, accumulator, valves, and instrumentation
- Generator hydrogen detraining equipment
- Piping

The flow of oil starts in the oil tank. See Figure 3-2 for top view and side view drawings of the oil tank.

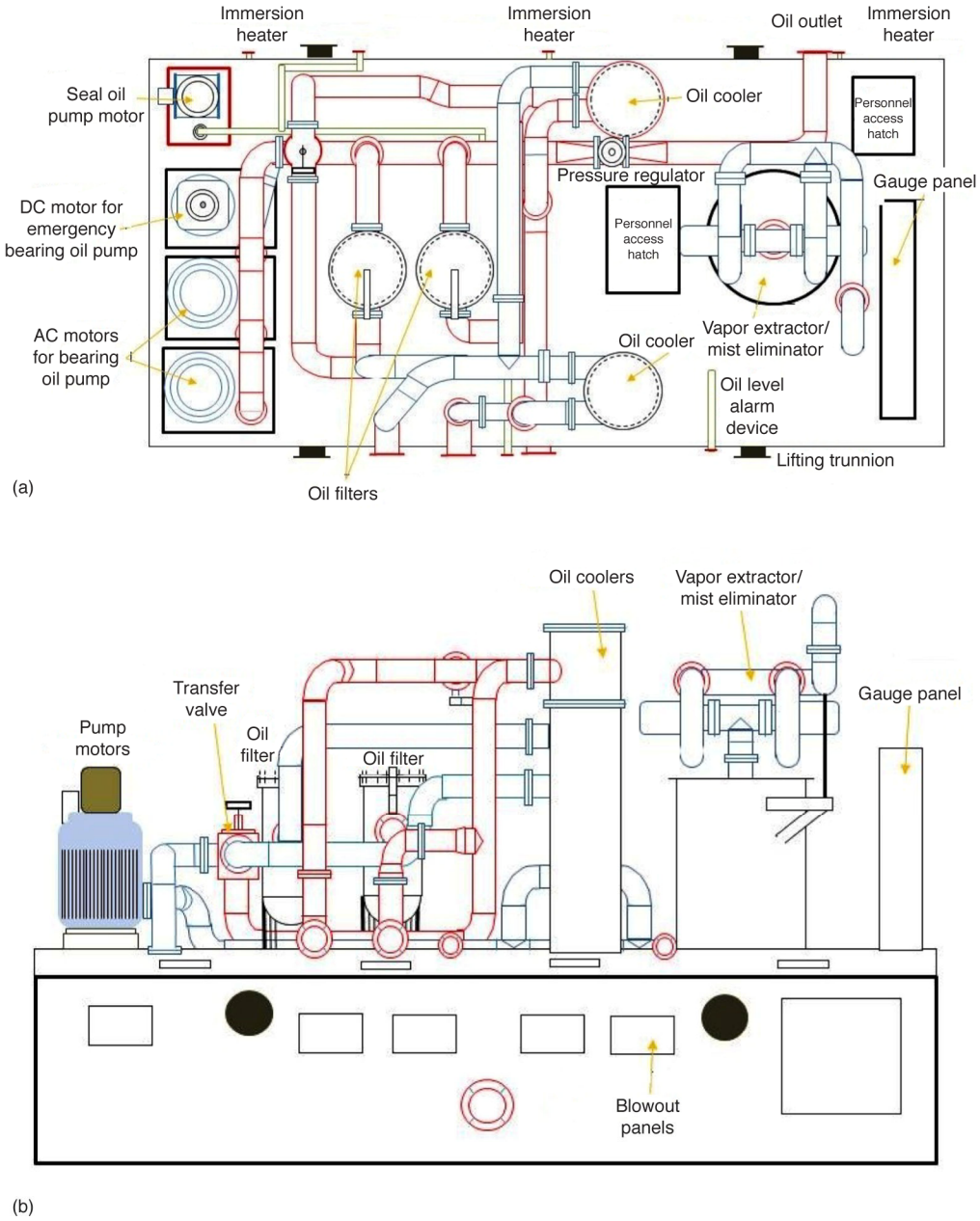

Figure 3-2
The oil tank: a) typical top view; b) typical side view

There are immersion heaters in the oil tank that keep the oil at an acceptable temperature for the proper oil viscosity. The minimum temperature of the oil in the reservoir should be 95°F. A temperature switch is mounted on the side of the tank. If the heaters fail to function and the oil reservoir temperature drops below 95°F, the switch will activate a low oil temperature alarm and prevent a turbine startup.

The oil system is ventilated through a vapor extractor mounted on top of the oil tank. A slight negative pressure is applied to the system by redundant motor-driven fans/blowers that pull air from the turbine-generator bearings, through the drain piping, and into the oil tank. A regulating valve is located downstream of each fan to regulate the oil tank pressure. The air drawn by the vapor extractor goes to the mist eliminator. The mist eliminator removes the oil vapor and returns the oil to a collection vessel or back into the oil tank. The air is then vented outside the area, usually through a roof vent.

The oil is pumped through one of two vertical, centrifugal pumps that are driven by AC motors. These pumps are called the bearing oil pumps, and they provide flow for the lubrication system for the combustion turbine. The AC motors are located on top of the oil tank, with the pump suction below the oil level in the oil tank. There are screens around the pump inlet to prevent any debris from damaging the pumps. The pumps are full-flow pumps and are arranged in parallel with one pump operating at a time.

All the pumps have a check valve on the pump discharge line to prevent oil flow into the pump that is not in service. There is a pressure switch located in each pump discharge line and another switch located before the oil coolers. If either pressure switch senses low oil pressure, an alarm is initiated and the second AC motor-driven pump is automatically started. If both of the oil pumps fail to operate properly, the oil pressure decreases to a level where the pressure switches close to signal the emergency bearing oil pump to start and to trip the unit. To trip the unit, one of the pressure switches and one of the alarm switches must initiate. This logic prevents a trip due to a false signal.

In addition, the seal oil pump AC motor would begin to operate. If the AC motor-driven seal oil pump does not start, then the DC motor would start the seal oil pump.

The DC motor-driven oil pump (called the emergency bearing oil pump) is the last line of defense against the loss of oil flow to the bearings. Oil from the emergency bearing oil pump is piped to bypass the oil cooler and filter and enters the oil system prior to the pressure regulating valve.

The DC motor-driven seal oil pump (called the emergency seal oil pump) is the last line of defense against the loss of seal oil to the generator seals. The emergency bearing oil pump motor and the emergency seal oil pump motor are set up to alarm but not to trip on overload current. The reliability of the oil system is considered more important than the failure of the DC motors.

The oil flows from the pumps through one of the heat exchangers (called oil coolers) to remove the heat from the oil. The oil in the oil coolers is cooled by the water flowing through the coolers. Lube oil temperature is maintained by throttling the amount of cooling water through a temperature control valve through the oil cooler. The oil coolers can be of two main designs: the plate and frame, and the tube and shell. The tube and shell heat exchanger can be a straight-through or a U-tube design.

Each oil cooler connects to a filter with the oil coolers and filters in parallel with each other. This design allows one of the filters to be changed and one of the heat exchangers to be cleaned without tripping the unit. A transfer valve is used to direct the oil flow to one of the oil cooler and filter arrangements.

The oil cooler and filter casings are self-venting. A sight glass is located in the vent line from the heat exchanger and each filter. When the case is full, oil will be visible in the sight glass. This indicates which filter is in service. There are removable filter elements in the oil filters. A differential pressure gauge indicates when the filter element should be changed. There are also pressure switches that provide a high differential pressure alarm signal across each filter. Differential pressure transmitters can remotely monitor the filters.

As the oil flows outside of the oil tank, a separate line to the seal oil system is provided (see Section 3.2.1). The next takeoff line goes to the trip oil system (see Section 3.2.2). Another line is provided for oil going to the hydraulic oil system (see Section 3.2.3). The oil then flows through a pressure regulating valve into the bearing header. From the bearing header, the oil flows through an in-line strainer to each of the turbine and generator bearings.

For oil flowing to the bearings, the initial oil inlet temperature should not exceed 90˚F. The bearing oil inlet temperature should be 100˚F before the unit exceeds 3000 rpm. After 3000 rpm speed, the temperature should be between 110˚F and 125˚F. The bearing oil discharge has an orifice in the line. Also, there are bearing sight drains to indicate flow leaving the bearing. The oil flows back to the oil tank by gravity. There are strainers and screens in the oil tank to filter any debris from entering the tank.

3.2.1 Seal Oil System

The function of the seal oil system is to keep the hydrogen inside the generator casing and prevent the outside air from coming into the casing. The seal oil to the generator casing is normally supplied by the lubricating system through a separate line taken before the pressure regulating valve. Figure 3-3 shows a diagram of the seal oil system.

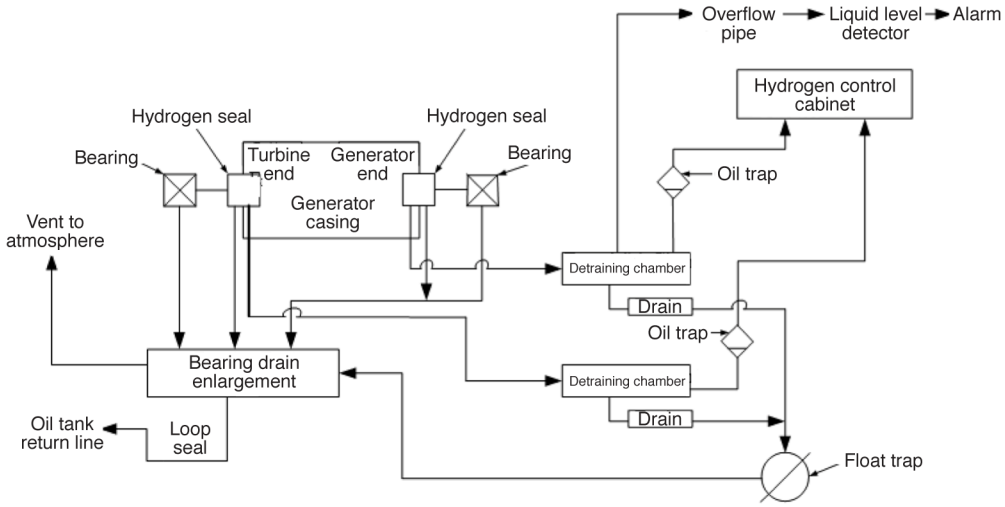

Figure 3-3
Seal oil system schematic

In the event of low lubrication system pressure or lube oil system shutdown for service, a separate, dedicated supply of oil is required to seal the generator hydrogen. This supply of oil is provided by the seal oil pump.

In some units, the seal oil pump is in an in-line arrangement with an AC motor and a DC motor. Under normal circumstances, the AC motor would provide the sealing function during a loss of lubrication oil. If the AC motor should fail or if the AC power is lost, the emergency DC motor is activated and drives the seal oil pump.

The seal oil system is designed to provide seal oil pressure at 5.5 to 6.0 psi above the operating hydrogen pressure. If the normal operating hydrogen pressure is 30 psig, then the seal oil pressure should be maintained at 35.5 to 36 psig. If the seal oil pressure falls below the target pressure to 4.5 psid, a pressure switch will alarm. If the pressure continues to decrease (3.5 psid), two redundant pressure switches will trip the unit.

If the seal oil pressure is too high, the seal oil could enter the generator casing and cause damage to the windings and/or trip the unit. For this condition, a liquid level detector with sight glass and level switch is provided.

3.2.2 Trip Oil System

The trip oil system is part of the control and protection system for the combustion turbine. Lubrication oil flows into the trip oil system downstream of the oil cooler and upstream of the pressure regulating valve. The bearing oil pump supplies the pressure for the trip oil system. There is an orifice in the trip oil supply line that is used to limit the flow to the trip system. See Figure 3-4 for a diagram of the trip oil system for the inlet guide vane. The components are similar for the fuel control valves and the gas stop/ratio valve.

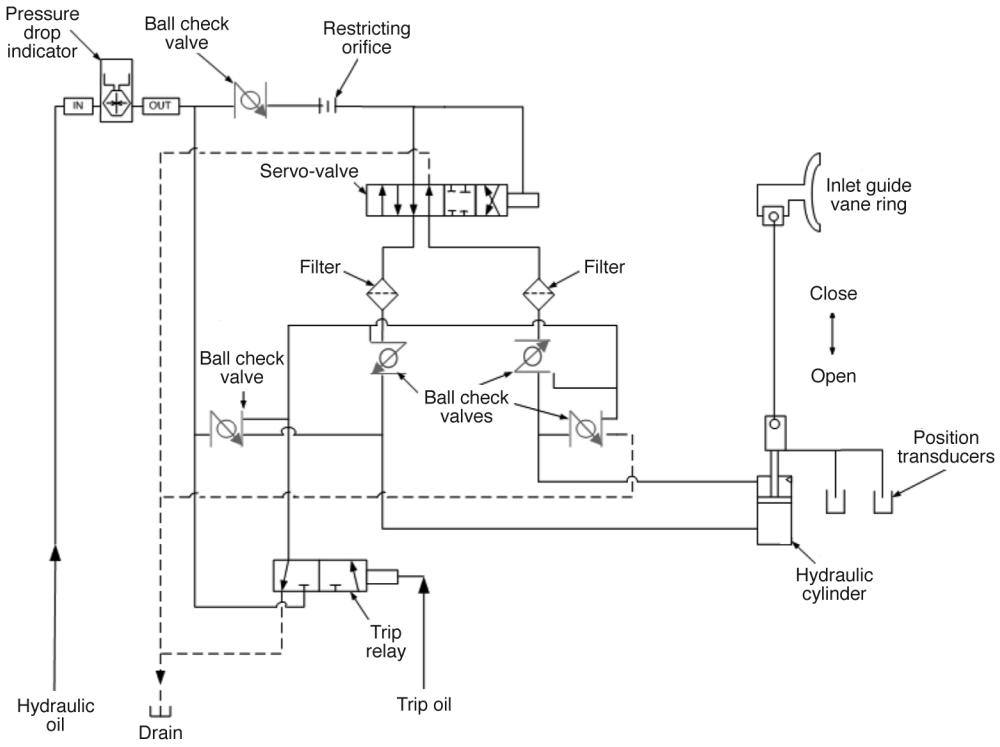

Figure 3-4
Trip oil system schematic

The inlet guide vane, gas stop/ratio valve, and fuel (gas or fuel oil) control valves are operated by hydraulic cylinders and electrohydraulic control devices. The electrohydraulic control devices consist of trip relays and servo-valves that respond to the operational demands of the unit.

Between the servo-valves and the hydraulic cylinders is a trip relay. When these relays are in the *run* position, the servo-valves are able to modulate the position of the valves. When these relays are in the *trip* position, one end of the cylinder is opened to drain, allowing the spring to quickly close the valve to shut off fuel or air flow. The relays are operated by the low-pressure trip oil and a trip solenoid valve. When the trip solenoid valve is energized, the solenoid valve closes and allows the trip oil to build up pressure to move the relays to the *run* position.

The servo-valves move to position the fuel system valves in response to the control system demands. The fuel system valves are actuated by hydraulic cylinders fed by the hydraulic oil system. Pressure switches are used to signal the control system that the fuel hydraulic trip system has been tripped. This signal is used to issue an alarm to the operator if there is a loss of pressure when the relay trip solenoids are energized or if the pressure does not decrease when the trip solenoids are de-energized.

The inlet guide vanes and the fuel valves in the trip oil system have redundant dump valves. These devices are solenoid-operated, spring-return, spool valves that will relieve trip oil pressure in the line that they control. These valves are normally energized-to-run and de-energized-to-trip. This philosophy protects the turbine during a loss of power.

3.2.3 Hydraulic Oil System

The hydraulic oil system uses the turbine lubrication oil to supply high-pressure oil to operate the fuel and air control valves and the bearing lift oil system. The supply line to the hydraulic system is taken upstream of the pressure regulating valve. See Figure 3-5 for a schematic of the hydraulic oil system.

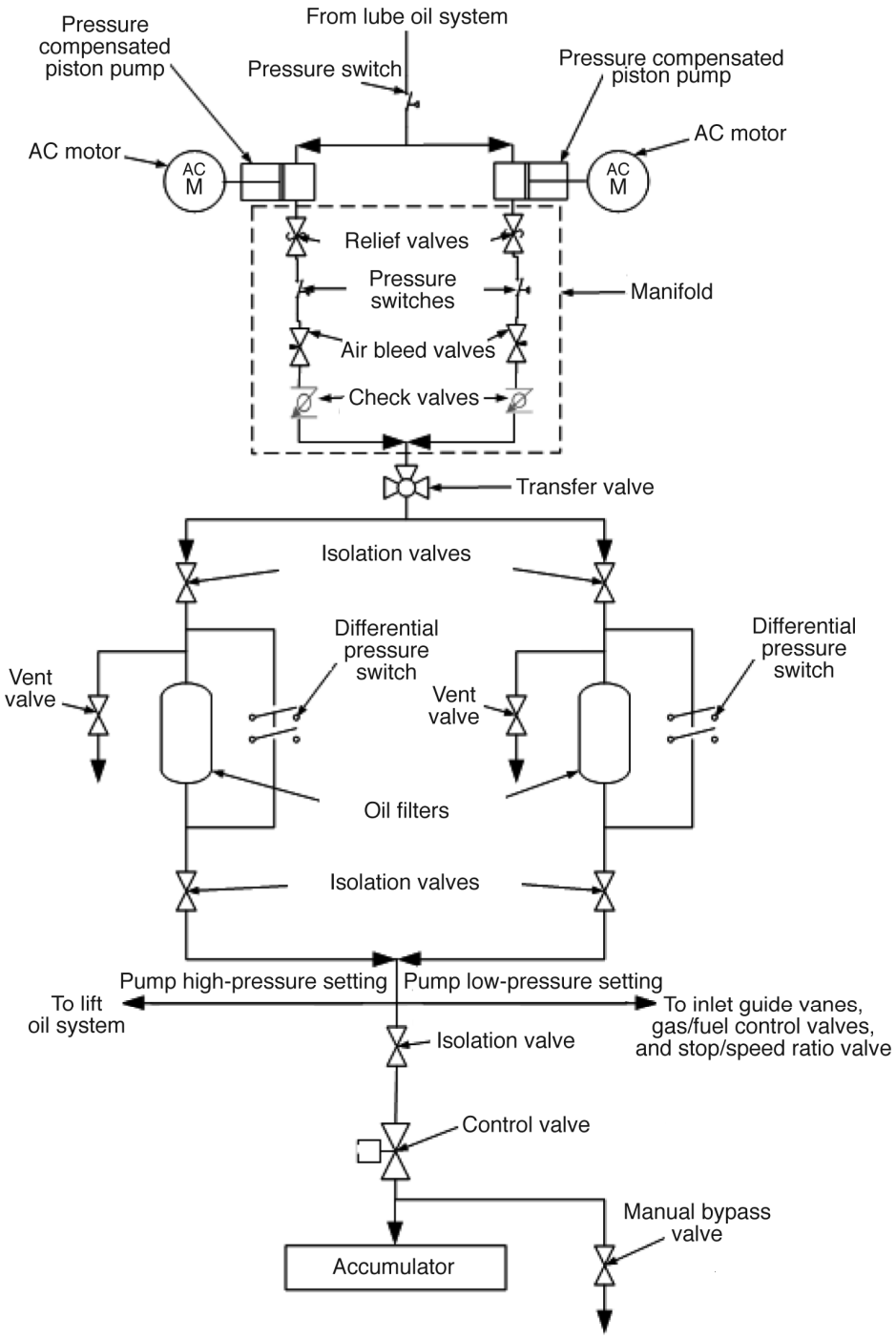

Figure 3-5
Hydraulic oil system schematic

The system is designed with two redundant, parallel flow paths. In normal conditions, only one path is in operation. Isolation valves are used so that maintenance can be performed on the path that is not in service.

There are pressure switches located at the inlet to the hydraulic system that prevent the hydraulic pump motors from starting if the inlet oil pressure is too low. These pressure switches protect the pumps from cavitation occurring.

Oil is pumped to the hydraulic supply manifold by one of the two pressure-compensated, positive displacement pumps. Each pump is driven by an AC electric motor. Only one pump is normally operating, and the other pump is in standby mode. The pressure switches indicate low pressure and start the standby hydraulic pump/motor to ensure adequate system oil pressure. There are check valves in the discharge of the hydraulic pumps to prevent flow into the pump that is in standby mode.

The hydraulic pump discharge pressure is controlled by a pressure compensator that is built into the respective pumps. The action of the compensator varies the stroke of the pump to maintain a set pressure at the pump discharge. Pressure relief valves for the hydraulic oil system prevent component failure due to over-pressurization. This could occur if the pressure compensators fail or are set incorrectly. A final component of the pump/motor assembly is a heater that activates to prevent condensation and freezing when the motors are not operating.

Hydraulic fluid is pumped through one of the two flow paths in the hydraulic supply manifold, depending on which pump is in operation. The manifold was designed to provide a means of mounting and interconnecting a number of small components. Contained in the manifold assembly are relief valves, air bleed valves, check valves, filters, and differential pressure switches. The air bleed valves vent any air present in the pump discharge lines.

After passing through the valves in the manifold, the high-pressure oil is piped through the system filter. A 5-micron dual filter assembly, complete with fill valve and transfer valve, is provided to maintain clean oil for servo-valve use. The filter has two integral, differential- pressure switches to signal when the filter should be changed.

At this point, the header flow is divided between hydraulic supply to the lift oil system and supply to the actuating cylinders of the inlet guide vane, gas/fuel control valves, and stop/speed ratio valve. When the lift oil system is needed during startup, the high-pressure setting is activated for the piston pumps. After startup, the lower pressure setting is used to supply oil to the valve actuating cylinders.

An accumulator (typically a 5-gallon bladder type) is provided that stores hydraulic oil for use in transient conditions such as valve actuation. The accumulator is in service regardless of which pump is in operation. There are an isolation valve and a flow control valve to control the refilling of the accumulator. A manual bypass valve allows the operator to quickly depressurize and drain the hydraulic oil supply header. This is useful when resetting the pump compensators, relief valves, or pressure regulators. The bypass valve also functions as an accumulator drain valve.

The hydraulic system contains the following components:

- Two hydraulic oil pumps (positive displacement type)
- Two hydraulic oil pump AC motors
- Two hydraulic filters
- Accumulator
- Hydraulic valves: check valves, relief valves, air-bleed valves, isolation valves, control valve, transfer valve, and bypass valve
- Hydraulic system instrumentation

Oil from the hydraulic oil system operates the hydraulic cylinders of the inlet guide vane, the gas stop/ratio valve, and the gas/fuel oil control valves. The inlet guide vane directs and controls the air flow to the first stage of the axial flow compressor. These vanes are located at the inlet to the compressor and are positioned by a hydraulic cylinder located on the turbine base. Lift oil is supplied to each turbine and generator bearing to raise the rotor onto a thin, static oil film. Figure 3-6 shows the lift oil system.

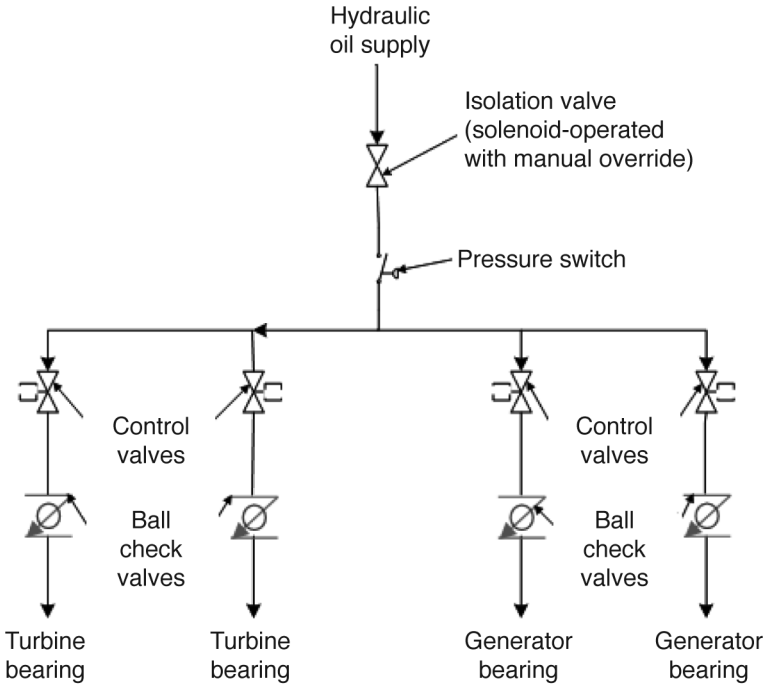

Figure 3-6
Lift oil system schematic

The supply isolation valve is a solenoid-operated valve that admits high-pressure oil to the bearings. There is a manual override if the solenoid fails. Each bearing has a flow-regulating valve to maintain a constant oil flow rate. Also, there are check valves in each bearing supply line to prevent the lift oil from flowing back into the supply line. There is a pressure switch that provides an alarm on low lift oil pressure and prevents the turning gear motor from operating.

3.3 Operational Considerations

The information for this section was taken from the GE MS 7001FA+E Combined Cycle Training Program and provides guidance on starting the lubrication system.

3.3.1 Inspection for Leaks

Before starting the lube oil pumps, pressurize the oil cooler with cooling water and inspect for leaks. Leaks may occur at flange gaskets, tube-sheet gaskets or tubes (when shell and tube coolers are used), or plate gaskets (when plate and frame coolers are used). Tube leaks are internal to the cooler, and increased water content in the lubrication oil results from tube leaks. Tube leaks can be seen through the sight flow indicators. Plate gasket leaks are external and can be seen as drips under the cooler.

When there are no evident water-side leaks, start the bearing and seal oil pumps. Inspect for leaks. Again, leaks may occur at flange gaskets, tube-sheet gasket (shell and tube cooler), plate gaskets (plate and frame cooler), or the duplex filter cover gasket. During the inspection process, bleed the air from the system by opening all the vent valves on the cooler/filter to be placed in service. Once the air is purged from the system, close all the vent valves. The oil side of the coolers and shell side of the filters are self-venting due to the sight flow indicators. The pressure loss across the system should be noted at startup and monitored on a periodic basis.

3.3.2 Oil Operating Temperatures

To obtain the appropriate oil viscosity, the oil temperature should be 70˚F (21˚C) before starting the oil system. The normal bearing inlet oil temperature is 130˚F (54˚C). The lubricating system cooling equipment is designed to maintain the nominal 130˚F (54˚C) bearing inlet oil temperature when an open, once-through cooling system with treated water is used for cooling. When a closed cooling water system or an air-cooled system is used, the bearing header oil temperature may be 160˚F (71˚C).

The minimum recommended oil inlet temperature is 90˚F (32˚C). The combustion turbine bearings are designed to operate satisfactorily at these inlet oil temperatures. During turning gear operation, the bearing inlet temperature should be in the 50˚F to 90˚F (10˚C to 32˚C) range.

With an air-cooled system, the nominal 130˚F (54˚C) bearing header temperature will be maintained for a high percentage of the operating time. Typically, the lubricant temperature rise from bearing inlet to bearing drain is in the 25˚F to 60˚F (14˚C to 33˚C) range. If a reduction gear is involved, this temperature rise may be 60˚F (33˚C).

Labyrinths and airflow are designed into the bearing housings so that the bearing drain spaces are at approximately atmospheric pressure. The lubricant temperature in the oil tank will be 25˚F to 40˚F (14˚C to 22˚C) above the bearing header temperature.

Please see the May 1999 GE publication "GEK 32568E Lubricating Oil Recommendations for Gas Turbines with Bearing Ambients Above 500˚F (260˚C)" for more information on gas turbine oil temperatures.

3.3.3 Transfer Operations

The following are transfer operation guidelines for the oil cooler, oil filter, hydraulic system oil filter, and hydraulic pump.

To change operation from the operating oil cooler to the standby oil cooler while the combustion turbine is in operation, the following steps are given:

1. Open the purge valve (located on top of the oil tank) and purge all air from the standby oil cooler.
2. Open the lubricating oil fill valve and allow the oil cooler to fill with oil until the flow is observed in the sight glass.
3. Open the closed coolant isolation valve on the cooler that is in standby mode. Coolant is now being circulated through both oil coolers.
4. Operate the oil transfer valve to direct the total oil flow to the oil cooler that is being put into service.
5. Close the coolant return isolation valve on the cooler with no oil flow.

The transfer of operation from the operating oil filter to the standby oil filter can be accomplished as follows:

1. Open the purge valve (located on top of the oil tank) and purge all air from the standby oil filter.
2. Open the filler or equalizing valve and fill the standby filter until a solid oil flow can be seen in the flow sight glass in the filter vent pipe. This indicates a "filled" condition.
3. Operate the transfer valve to bring the standby filter into service.
4. Close the filler valve.

The following procedure should be followed when transferring from the operating oil filter to the standby oil filter in the hydraulic system:

1. Open the air bleed valve on the unused filter.
2. Open the fill valve.
3. When oil with air comes out of the air bleed, operate the transfer valve.
4. Close the fill valve.
5. When no air is contained in oil coming from the air bleed valve, close the bleed valve.

The following procedure should be followed when transferring from the in-service hydraulic pump to the standby pump:

1. Turn the switch to the *Run* position for the standby hydraulic pump.
2. Wait 30 seconds.
3. Turn the switch for the in-service hydraulic pump through the *Off* position to the *Autostart* position.
4. Observe the hydraulic pump pressure of the in-service hydraulic pump.
5. If the pump pressure is not falling, then turn the pump switch from *Autostart* to *Off.*
6. Be sure that the switch for the pump being serviced is in the *Off* position.
7. Before maintenance work begins on the pump that is not in service, disconnect the motor electrical connections.

3.3.4 Extended Shutdown

For shutdown periods of 6 weeks or less, the following are recommendations for the lube oil system:

- Turn the oil pumps on for 30 minutes each week.
- Drain the oil coolers of all water.
- Check the oil temperature in the oil tank. The oil temperature should be above ambient air temperature but should not exceed 140˚F.
- The vapor extractor should be operating as long as there is hydrogen in the generator.

For shutdown periods of greater than 6 weeks and in addition to the recommendations listed for shutdown periods of 6 weeks or less, the following recommendations are given:

- If the oil is removed from the oil tank, the oil tank should be coated with a corrosion-inhibiting, vapor phase type oil that is compatible with the lube oil.
- The oil should be sampled and tested for water and deterioration every 6 months.
- The motor and pump assemblies should be rotated by hand every 2 months.
- Motor bearings should be greased annually.

3.4 Personnel Qualifications and Training

Information for this section was taken from the *GE MS 7001FA+E Combined Cycle Training Program, Combustion Turbine Training Manual*, Chapter 10, "Oil System."

Training and qualification of assigned personnel are important responsibilities of line managers. The goal of successful training and qualification programs is to produce and maintain well-qualified, competent personnel to operate and maintain power stations in a safe and reliable manner. To accomplish this goal, a close working relationship between the line and training managers is required. Line managers should be personally involved to identify training needs and verify that the initial and continuing training programs are established to meet these needs. Periodic observation of training and qualification programs by line managers is also essential to this effort.

Training newly hired employees should be viewed as an integral part of every employee's job function. Achievement of organizational goals and objectives is facilitated when personnel understand the bases of organizational policies and practices and when they are highly motivated, trained, and qualified.

Initial personnel training programs should provide the basic knowledge and skills needed to perform intended job functions. Initial training may include a combination of classroom, simulator, and on-the-job training. On-the-job training and simulator evaluations are most effective when conducted under the same conditions that will be experienced at the station.

Qualification to perform a job task or function independently requires line manager approval. While some training may be exempted, task performance, as part of qualification prior to assignment to complete a job independently, should not be exempted.

Once personnel are qualified to perform a task or function independently, they should receive periodic, continuing training on the skills and knowledge required to complete that task. This training should enhance the proficiency of personnel in performing their jobs.

An important position in the station is the Control Operator. Typically, the Control Operator candidate will have worked as a Plant Equipment Operator and may have completed some of the training requirements for the Control Operator. A Control Operator must be competent to operate the controls of the station generating equipment. This competence is based on the following characteristics:

- Understanding of the concepts, philosophy, and operator responsibilities with respect to plant safety
- Knowledge of the systems and components that operators have the responsibility and control for
- Knowledge of administrative procedures and regulatory requirements established for controlling the plant
- Skill in manipulating plant controls
- Ability to apply theoretical knowledge to practical situations
- Understanding of concepts and knowledge of critical components to accident mitigation
- Ability to diagnose plant status and to initiate corrective actions based on available information
- Ability to use plant procedures to implement appropriate actions under normal, abnormal, and emergency plant conditions
- Ability to place the plant in a safe condition when faced with uncertain or unexpected conditions
- Ability to control and coordinate activities of subordinates and others effectively
- Ability to act as an effective member of the Control Room Shift Team

3.4.1 Combustion Turbine Lubrication System Operator Tasks

The following are operator tasks for the combustion turbine lubrication system:

- Monitor the oil system parameters—that is, oil pressures, oil temperatures, pump discharge pressures, filter differential pressure, oil cooler temperatures, and so on
- Perform manual valve lineups
- Charge accumulators with nitrogen
- Perform routine maintenance tasks—that is, adjust valve packing, clean motor vents, and so on
- Evaluate the effectiveness of the oil system components in performing their intended function—that is, vapor extractor suction pressure in oil tank, pump discharge pressures, emergency bearing and seal oil pump/motor reliability, and so on
- Swap the in-service oil cooler with the standby oil cooler, and swap the in-service oil filter with the standby oil filter

- Start or verify automatic start of oil pumps under various conditions
- Perform electrical breaker and remote alignments
- Perform Control Room monitoring associated with the oil system
- Assist the Shift Supervisor in evaluating non-routine plant conditions
- Provide technical assistance in troubleshooting system malfunctions
- Respond to system malfunctions
- Respond to Control Room annunciators associated with the oil system
- Recognize abnormal system parameters leading to performance loss

Section 4: Technical Description

4.1 Lubrication System Components

The detailed description of the lubrication system components was taken from the *GE MS 7001FA+E Combined Cycle Training Program, Combustion Turbine Training Manual,* Chapter 10, "Oil System." It was intended that this material be a general representation of other combustion turbine lubrication systems.

The lubrication system is housed in a module or skid. The module contains the components described in this section.

1. Oil tank

The oil tank is a reservoir that is integral with the accessory module (also called a *skid*). The GE 7FA unit has a 6200-gallon tank. Two AC-powered motors (for the bearing oil pumps) and one DC-powered motor (for the emergency bearing oil pump) are located on top of the oil tank. The respective pumps are located below the tank cover.

In some arrangements, the AC-driven motor for the seal oil pump is also located on top of the oil tank, with the seal oil pump located below the tank cover. In other arrangements, the seal oil pump is connected on one end to the AC-powered motor, and the other end of the pump is connected to a DC-powered motor. This seal oil pump arrangement is located beside the oil tank.

A baffle extends from the top of the tank to below the normal oil level, between the pumps and the centrally positioned turbine oil return. The baffle allows detraining (separation of the oil and the air entrained in the oil) for the oil returning to the tank. Several hinged access covers are provided on the top of the tank. The tank has a sloped bottom and two 3-in. drain outlets. There is a man-way (typically a bolted opening for personnel) for access inside the tank. An access ladder is located below the man-way inside the tank.

For GE units, a stainless steel, 30-mesh removable basket strainer is located inside the tank at the bearing oil drain inlet. (Drain-back screens or strainers are normally referenced by a mesh size. In general, the higher the mesh number, the finer the mesh and the smaller the particles that the screen or strainer can remove.) These drain/blow-down connections should not be permanently routed

to external drains, but should remain capped when not in use. Two screens are normally provided in series across each of the oil drain flow paths to allow one screen to be removed and cleaned while the system is in service. This prevents returning oil from draining into the tank without passing through at least one screen.

For Siemens (Westinghouse design) units, usually 150-mesh strainers are installed. The strainers are perforated plate with metal wire mesh inside or upstream (oil inlet side of the strainer). The strainers are fitted with handles to allow removal. Prior to removal of a strainer, a stop plate is installed in slots at the inlet side of the strainer compartment, diverting drain oil flow to the other strainer(s). The stop plate is also provided with a handle to assist with installation and removal and is stored toward the back wall of the strainer compartment. Once the stop plate is installed, the respective strainer can be removed for cleaning.

Temporary fine-mesh return screens are often used as a capture point at the drain piping return to the main oil tank during flushing after outage activities. These screens should be periodically checked during flushing. Once the oil cleanliness level is acceptable, the fine-mesh screens should be removed.

The interior of the tank is coated with an oil-resistant protective coating. A level transmitter is used in the oil tank to monitor the oil level. A level alarm device (float-arm operated) is mounted on the top of the oil tank. The float mechanism operates two device switches. These switches are connected to the alarm circuit of the turbine control panel. An alarm occurs if the oil level is above or below the design levels for the oil tank. A trip function for low oil level is included. The oil level is visually indicated by a heavy-duty sight glass on the side of the tank.

One access cover is positioned directly over the pressure regulating valve and the seal oil flow valve to allow adjustment/replacement of these components.

2. Immersion heaters

During standby periods, the oil is maintained at the proper temperature by immersion heaters installed in the oil tank. The heaters are unfinned, tubular, Calrod-type, single-phase heaters. Temperature switches activate the heaters to maintain the oil tank temperature in the range of 70°–80°F (or oil temperature of 95°–105°F). If the heaters fail to function and the oil reservoir temperature drops below 50°F, one of the temperature switches will initiate a low oil temperature alarm and will prevent a turbine startup. In the *auto* position, the immersion heaters will not come on unless there is an AC motor-driven pump in operation. Each heater is rated at 15-kW, 460-volt, 60-cycle, and 3-phase.

3. Vapor extractor/mist eliminator

The lubrication system is ventilated through the vapor extractor mounted on top of the oil tank. The vapor extractor removes entrained air from the oil and prevents an explosive buildup from occurring inside the oil tank. The vapor extractor is a centrifugal blower (or fan) and motor assembly that pulls out unwanted gases from the oil drain piping. A second vapor extractor may be provided, with one extractor in service and the second extractor as a standby unit.

A slight negative pressure (-0.5 to -1.5 in. water gauge) is maintained in the system by the blower pulling air through the vapor extractor. The blower is driven by an AC motor. This negative pressure draws sealing air through the combustion turbine bearing seals. A regulating valve is located downstream of the fan and is used to regulate the oil tank pressure. The vapor extractor discharge valve regulates the amount of vacuum created in the tank by the vapor extractor. The discharge valve is located on top of the oil tank.

Downstream of the vapor extractor is the mist eliminator, also called a demister. The mist eliminator filters out the oil vapor before the air is vented outside the unit. The oil then drains back to the oil tank or to a collection container.

The mist eliminator consists of a canister or housing containing a series of chevron plates or baffles with additional fill or packing material. The location of the mist eliminator may be near the oil tank or near the roof. If the mist eliminator is located near the oil tank, the reclaimed oil vapor can be returned to the oil tank. If the mist eliminator is located near the roof, the oil vapor can be discharged to a dirty oil tank or drum.

The mist eliminator is often located as close as possible to the vent outlet, which is typically at the roof elevation. This promotes condensation of water vapor in the line prior to the mist eliminator. The mist eliminator should be located in an area where it will not be subject to freezing. The condensate can be drained through a loop seal to a waste oil tank or drum for disposal.

Some of the GE 7FA mist eliminators are located on a separate skid, with the blower, piping, and valves on the skid. Other GE 7FA mist eliminators are mounted directly above the oil tank with an internal drain to the tank below the oil level.

4. Bearing oil pumps

The bearing oil pumps are vertical, submerged, single-stage, single-suction, centrifugal pumps. Each pump is driven by a vertical-shaft electric motor, which is mounted on a stand above the pump cover plate. The motor shaft is connected to the pump shaft through a flexible coupling. The GE 7FA unit pumps are rated at 100-hp, 833-gpm, 137-psig, and 3550-rpm with a 120-v heater.

These pumps are the main oil pumps that supply oil to the turbine and generator rotor bearings, hydrogen seal oil system, trip oil system, and hydraulic oil system. Each pump is rated for full flow capacity, and the pumps are piped in parallel using a common discharge line to the oil cooler. There are pressure switches in the pump discharge lines that will alarm on low pressure. The standby pump/motor is automatically started if the operating pump discharge pressure is low.

The arrangement of one pump normally operating and the other pump in a standby mode is referred to as *lead-lag*. The selection of lead and lag pumps is made by the operator through the control system prior to startup. By alternating which pump is lead and which pump is lag, the operating hours on the pumps and motors can be controlled.

The bearing oil pump and motor can be removed as a unit from the top of the oil tank.

Figure 4-1 shows a typical vertical motor and centrifugal pump arrangement (taken from EPRI report 1010191, *Turbine-Generator Auxiliary Systems, Volume 1: Turbine-Generator Lubrication System Maintenance Guide*).

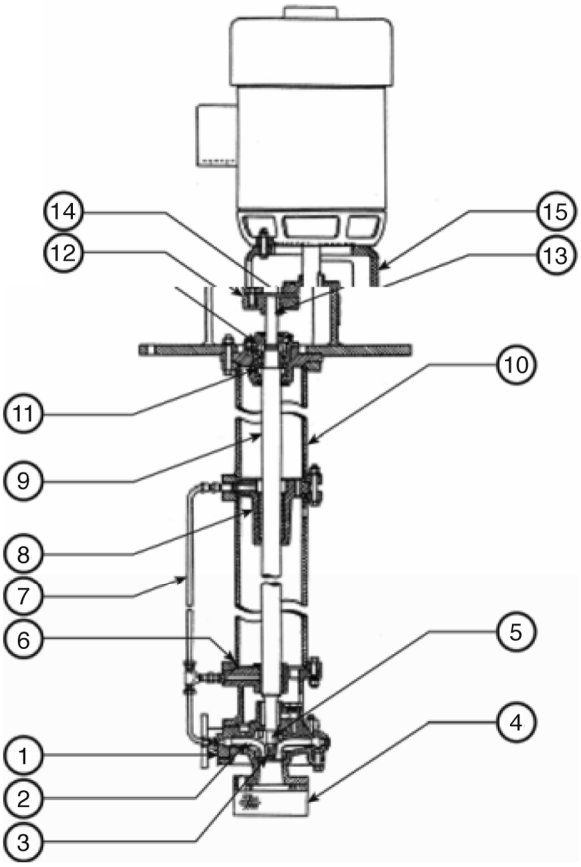

Item	Description
1	Casing
2	Impeller
3	Retaining nut
4	Suction strainer
5	Impeller key
6	Lower bearing
7	Pump bearing oil supply line
8	Intermediate bearing
9	Shaft
10	Outer column
11	Thrust bearing
12	Bearing locknut
13	Coupling key
14	Coupling
15	Motor support

Figure 4-1
A motor-driven auxiliary oil pump

5. Bearing oil pump motors

The two AC-driven motors for the bearing oil pumps are located on the top of the oil tank. These motors are vertically mounted with the rotor pointing downward. These motors are classified as normal thrust motors and are able to carry light thrust loads in the upward or downward direction with some radial load capacity. The motors have grease-lubricated rolling element bearings at each end of the rotor. The lower bearing carries all the thrust loads and is locked in place in the lower end-shield and onto the rotor. The upper bearing acts only as a guide bearing. The upper bearing has clearance above and below the outer ring and is free to move up and down.

It is recommended that independent power sources be used for these AC motors and that each motor have the capability to be connected to either power source. Each motor includes a space heater to protect the motor in cold temperatures.

6. Emergency bearing oil pump

The emergency bearing oil pump is submerged in the oil tank and is a partial-flow, centrifugal pump used when the bearing oil pumps are not functioning. Typically, this condition would occur when the AC power to the motors is not available. If the bearing header pressure is low (83 psig), then the DC motor and emergency pump would automatically start. The discharge of the emergency bearing oil pump flows directly into the bearing header and bypasses the lube oil coolers and filters. The GE 7FA emergency bearing oil pump is rated at 20-hp, 510-gpm, 42-psig, and 1750-rpm.

7. Emergency bearing oil pump motor

The emergency bearing oil pump motor is a DC motor that is supplied power by the station batteries. If the bearing oil pressure is low (83 psig), then the DC motor would automatically start.

8. Seal oil pump

The seal oil pump is a centrifugal pump that provides oil to the generator hydrogen seals when the bearing oil pumps are not functioning. The seal oil pump is rated at 10-hp, 45-gpm, and 90-psig with a 120-volt heater.

There are two arrangements for the seal oil pump. One arrangement is for the seal oil pump to be located below the oil tank cover, with the AC-powered motor located on top of the oil tank. The pump and AC motor are connected with a flexible coupling. The second arrangement is called an *in-line arrangement* and consists of one end of the seal oil pump connected to an AC-powered motor and the other end of the pump connected to a DC-powered motor. In the in-line arrangement, the pump and motors are located beside the oil tank.

9. Seal oil pump AC motor

Typically, the seal oil pump AC-powered motor is vertically mounted on top of the oil tank with the rotor pointing downward. This motor is classified as a normal thrust motor, being able to carry light thrust loads in the upward or downward direction with some radial load capacity. The motor has grease-lubricated, rolling element bearings at each end of the rotor. The lower bearing carries all the thrust loads and is locked in place in the lower end-shield and onto the rotor. The upper bearing acts only as a guide bearing. The upper bearing has clearance above and below the outer ring and is free to move up and down.

10. Seal oil pump DC motor

In an in-line arrangement, the DC motor is directly connected to the seal oil pump. The DC motor is started if the discharge of the seal oil pump is too low and the AC motor-driven bearing oil pumps are not functioning.

Figure 4-2 shows the in-line seal oil pump and motor arrangement (taken from the *GE MS 7001FA+E Combined Cycle Training Program, Combustion Turbine Training Manual*).



Figure 4-2
An in-line seal oil pump and motor arrangement

11. Oil coolers

There are two oil coolers (heat exchangers) located on top of the oil tank. The oil coolers typically use filtered water to flow through the coolers and remove the heat from the oil. The flow of **water** through the coolers is throttled by a temperature regulating valve.

The coolers can be of a plate and frame design or a tube and shell design. In the plate and frame design, the recommended cooler material is stainless steel. The tube and shell design can be a straight-through design or a U-tube design. The water flows through the tubes, and the oil is on the shell side of the cooler. Both design oil coolers are self-venting.

The oil coolers are connected in parallel, with one oil cooler in service and the other oil cooler in a standby mode. Each oil cooler connects in series to an oil filter. This design is provided so that the standby coolers can be cleaned and/or the standby filters can be changed without taking the unit out of service.

The temperature-regulating valve (sometimes called the temperature control valve) controls the oil temperature leaving the cooler. A three-way valve bypasses coolant around the oil cooler, allowing the coolant flow to maintain the oil within the designated temperature range. A temperature controller regulates the control valve. If the oil temperature outside of the oil cooler exceeds the setpoint temperature, then the signal from the temperature controller will open the control valve, allowing more coolant to flow through the oil cooler, thus reducing the oil temperature. If the oil temperature flowing out of the oil cooler is less than the desired temperature, then the temperature controller will send a signal to the control valve to bypass some of the coolant flow to the oil cooler. Reducing the coolant flow to the oil cooler will increase the oil temperature leaving the cooler.

During startup, the control valve to the oil cooler is usually closed and will open as the oil temperature reaches the control temperature range. A manual crank is available to operate the control valve if needed.

12. Oil filters

Dual, full-flow filters clean the oil. The filter cases are self-venting. A sight glass is located in the vent line from the oil cooler and each filter. When the case is full, oil will be visible in the sight glass. This indicates which filter is in service. By using the manually operated transfer valve, the standby filter can be put into service as the operating filter is taken out of service, without interrupting the oil flow to the bearing oil header. The oil then flows through one of the two parallel filters. The transfer valve is used for selecting which set of oil coolers/filters is in use.

A differential pressure gauge indicates when the filter element should be changed. Also, there are pressure switches that provide a high differential pressure alarm signal across each filter. The pressure switches alarm at 15 psid.

The dual oil filters have removable filter elements. A replacement cartridge is used for a faster filter change-out.

Check valves are located downstream of each oil filter. These check valves prevent reverse flow through the standby oil cooler/filter.

13. Instrumentation

Instrumentation includes thermocouples, temperature switches, pressure switches, level switches, pressure gauges, sight glasses, and so on. Table 4-1 is a representative sample of the instrumentation in the oil system, with some of the typical values.

Table 4-1
Typical settings for lubrication system instrumentation

Location	Instrument	Parameter	Value
Bearing Header Pressure Regulating Valve	Pressure Switch	Bearing Header Pressure Alarm, Trip and Alarm	10 psig decreasing alarm 6 psig decreasing trip and alarm
Bearing Oil Drain for Each Journal and Thrust Bearing	Thermocouple	Bearing Oil Discharge Temperature	155–190°F
Bearing Oil Filter	Pressure Switch	High Differential Pressure Alarm	15 psid increasing
Bearing Oil Filter	Pressure Gauge	Differential Pressure	NA
Bearing Oil Pump Discharge	Pressure Switch	Indicates Which Pump Is the Operating Pump	40 psig increasing
Bearing Oil Pump Discharge	Pressure Switch	Low Bearing Oil Pump Discharge Pressure Alarm and Automatic Start of Standby Pump/Motor	88 psig decreasing
Bearing Oil Pump Discharge	Pressure Gauge	Oil Pump Discharge Pressure	NA
Bearing Oil Header	Pressure Gauge	Header Pressure	25 psig
Emergency Bearing Oil Pump Discharge	Pressure Gauge	Discharge Oil Pressure	NA
Emergency Seal Oil Pump	Pressure Switch	Discharge Oil Pressure	10 psig

Table 4-1 (continued)
Typical settings for lubrication system instrumentation

Location	Instrument	Parameter	Value
Hydraulic System Inlet	Pressure Switch	Prevents Starting of the Hydraulic Pump Motors on Low Inlet Pressure	8 psig
Hydraulic System Filter	Pressure Switch	High Differential Pressure Alarm	80–100 psid
Hydraulic System Oil Pressure	Pressure Switch	Automatically Starts the Standby Hydraulic Pump/Motor on Low Pressure	1450 psig air and fuel valves 3350 psig lift oil
Immersion Heater Thermostat	Temperature Switch	Heater Temperature	Decreasing: 95°F On, Increasing 105°F Off
Lift Oil Header	Pressure Switch	Alarm and Prevents Turning Gear Motor Operation on Low Pressure	8 psig
Oil Cooler Inlet	Temperature Gauge	Oil Temperature	NA
Oil Cooler Outlet	Temperature Gauge	Oil Temperature	NA
Oil Cooler	Sight Flow Indicator	Presence of Oil Flow	NA
Oil Header	Thermocouple	High Temperature Trip	175°F
Oil Header	Pressure Switch	Low Oil Pressure Trip	8 psig
Oil Pump Discharge	Pressure Switch	Starts the Standby Bearing Oil Pump/Motor	83 psig decreasing
Oil Pump Discharge	Pressure Switch	Arms the Emergency Bearing Oil Pump Motor	60 psig increasing
Oil Pump Discharge	Pressure Switch	Starts the Emergency Bearing Oil Pump/Motor	40 psig decreasing
Oil Tank	Thermocouple	High Temperature Alarm	165°F

Table 4-1 (continued)
Typical settings for lubrication system instrumentation

Location	Instrument	Parameter	Value
Oil Tank	Thermocouple	Temperature Normal	95°F–105°F
Oil Tank	Heavy Duty Sight Glass	Oil Level	NA
Oil Tank	Pressure Switch	Air Pressure	4 inches water
Oil Tank	Level Switch	High Oil Level Alarm	2.5 inches above normal
Oil Tank	Level Switch	Low Oil Level Alarm	2.5 inches below normal
Oil Tank	Level Switch	Trip	8 inches below normal
Seal Oil	Pressure Switch	Alarms on Low Oil Pressure	4.5 psid
Seal Oil	Pressure Switches – 2 Redundant	Low Seal Oil Pressure – Trips the Unit	3.5 psid
Seal Oil	Pressure Gauge	Seal Oil Feed Pressure	NA
Seal Oil	Level Switch	Alarms on Rising Level of Seal Oil	5 inches and rising
Seal Oil	Pressure Gauge	Seal Oil Differential Pressure	NA
Seal Oil	Pressure Transmitter	Seal Oil Differential Pressure	NA
Seal Oil Detraining Chambers	Level Switch	Alarms	High Oil Level
Seal Oil Pump Discharge	Pressure Switch	Oil Pressure	90 psig
Seal Oil Turbine End	Pressure Gauge	Oil Pressure	NA
Seal Oil Generator End	Pressure Gauge	Oil Pressure	NA
Vapor Extractor Discharge	Pressure Switch	Oil Tank Vacuum Decreasing – Starts Standby Extractor	0.3 in. water decreasing

For GE units, the instrumentation tubing is a seamless 304 stainless steel material. Tube fittings are composed of stainless steel Swagelok compression fittings.

14. Valves

There are several different valves in the lubrication system. These valves include the following:

- **Bearing header pressure regulating valve** – The bearing header pressure regulating valve regulates the flow of oil above the minimum flow required by the bearings. The regulating valve is located in parallel to an orifice that provides minimum necessary oil flow when the valve is not regulating. Downstream of the bearing pressure regulator are four pressure switches that provide alarm and trip functions. There is one pressure transmitter for remote pressure indication. The nominal setting for the regulating valve is for a bearing header pressure of 25 psig. The valve can be accessed through the bolted cover on top of the oil tank located next to the vapor extractor. The regulator setting can be changed by turning the adjustment screw located on the actuator yoke.
- **Isolation valves** – Isolation valves are located before and after equipment to allow maintenance work while the unit is on line.
- **Oil cooler/air filter purge valve** – The purge valve is a 0.5-inch ball valve located above the oil tank. The purge valve is piped in parallel with the oil cooler/filter transfer valve. This arrangement allows the air to be purged before full oil flow is directed to the oil cooler/filter to be placed in service.
- **Pump discharge check valves** – Check valves are installed in most of the pump discharge lines. These check valves prevent reverse flow through the standby pump. Reverse flow can cause low system pressure by misdirecting the oil flow and damage the standby pump.
- **Relief valves** – Relief valves are used in the lubrication system to control any excess pressure events that may occur.
- **Seal oil regulating valve** – The valve senses hydrogen pressure and seal oil pressure. There is a manual bypass valve located in parallel with the pressure regulating valve to provide seal oil if the regulator is not functioning. The regulating valve is set to maintain seal oil pressure at 5.5 to 6 psid pressure. The differential pressure is the amount of pressure above the hydrogen pressure in the generator casing that is needed. For example, if the hydrogen casing pressure is 30 psig, then the seal oil pressure should be 35.5–36 psig. The valve can be accessed through the bolted cover on the oil tank next to the vapor extractor.

  In the event that the seal oil pressure is not maintained above the hydrogen pressure, a pressure switch will alarm. If the pressure continues to lower, two redundant pressure switches will trip the unit. If the seal oil pressure is too high for the hydrogen pressure, this condition could lead to seal oil entering the generator, which could short windings and trip the unit. To monitor this condition, a liquid level detector with a sight glass and level switch is provided.

- **Temperature regulating valve for oil cooler** – The temperature control valve receives a signal of the oil cooler discharge oil temperature. If the oil temperature is too high, the control valve opens the water inlet to the cooler to provide more cooling water flow. If the oil temperature is too low, the control valve closes the water inlet flow to the cooler to reduce the cooling effect on the oil.
- **Transfer valve for oil cooler and filter set** – To facilitate the transfer of oil flow from the in-service cooler to the standby cooler, a three-way valve is used. The valve is designed so that oil flow is not interrupted when performing the transfer.
- **Vapor extractor discharge valve** – The vapor extractor discharge valve regulates the amount of vacuum created in the oil tank by the vapor extractor. The valve is a manual valve and is accessible from the top of the oil tank. The valve can be adjusted by rotating the valve handle to obtain a vacuum reading of -0.5 to -1.5 inches of water.

15. Hydraulic system equipment

The hydraulic system contains the following components:

- **Two hydraulic oil pumps (positive displacement type)** – The hydraulic oil pumps consist of two full-size, variable displacement pumps that operate at constant pressure. The design is an axial, piston pump with built-in dual pressure compensators. The compensators act by varying the stroke of the pistons to maintain a set pump discharge. Each pump has a high- and low-pressure compensator setting. The high-pressure setting is used when the lift oil supply to the rotor bearings is needed. The low-pressure setting is used when actuation of the air inlet guide vanes and fuel control valves is needed. The dual compensator changes from one pressure setting to the second pressure setting through a sensing line from the lift oil header. The pump has an internal pilot valve that is used to change the pressure settings.

  The GE 7FA units have the Oilgear type PVWH (acronym for Pump, Variable, WH series design pump) pumps rated at 22 gpm at 5000 psig. The dual pressure compensator is adjustable using a screw adjuster with a locking nut. The pressure settings are adjustable within the range of 1000 to 5075 psig. Each pump contains a heater that prevents condensation and freezing while the motors are not operating.

  There is a maximum volume stop that restricts the pump flow to the full load rating of the motor. This setting was made in the manufacturing process and should not require any adjustment. This stop is not connected to the compensator control operation.
- **Two hydraulic oil pump AC motors** – The motors for the hydraulic pumps are typically provided by the hydraulic pump manufacturer.
- **Two hydraulic filters** – The hydraulic filters are 5-micron dual filter assemblies.

- **Accumulator** – The accumulator is a 5-gallon bladder type tank.
- **Hydraulic valves** – The hydraulic valves include check, air-bleed, isolation, control transfer, bypass, and relief valves. The hydraulic relief valves are set at 4025 psig.
- **Hydraulic system instrumentation** – Instrumentation for the hydraulic system includes pressure switches at the inlet to the system, at the discharge of each pump, and in the manifold, and differential pressure switches across each oil filter.

16. Generator hydrogen detraining equipment

It is necessary to separate the hydrogen from the seal oil and the generator bearing drain oil before the oil returns to the oil tank. The practice of removing the hydrogen is called detrainment. Detrainment equipment (called the seal drain enlargement) consists of two small detraining chambers mounted at the collector end of the generator. Hydrogen gas in suspension with the seal drain oil (from the hydrogen-side drains of the hydrogen seal casings) will bubble out in the chambers.

Both chambers drain through a common line to a float trap. The float trap is required to prevent the loss of hydrogen with the drain oil when operating at elevated hydrogen pressures. A vertical pipe extends from the upper part of each detraining chamber. The other end of each pipe connects to a control valve and flow meter in the hydrogen control cabinet. This arrangement permits a small amount of hydrogen to be continuously discharged to the atmosphere from each detraining chamber. Oil traps are installed in the lines to prevent oil from filling the hydrogen control cabinet.

Another vertical pipe, open at the top, is installed in the collector end chamber of the seal drain enlargement to collect the oil that results from an abnormally high oil level in the enlargement. This overflow is piped to a liquid level detector with an alarm switch. Since the two chambers of the enlargement are connected by a common drain line, a high level in either chamber would result in the operation of the alarm. An abnormally high oil level is usually caused by incorrect operation of the drain valves or float trap.

The airside seal oil, the generator bearing drain oil, and the hydrogen-side seal oil (after passing through the seal drain enlargement and float trap) drain to a chamber mounted on the generator casing. This chamber (called the bearing drain enlargement) provides a large surface area for defoaming and detraining the oil before the oil is returned through a loop seal to the oil tank. In addition, hydrogen that is in solution in the oil will be released due to the drop to atmospheric pressure in this chamber. The bearing drain enlargement is vented to the atmosphere. In the event of failure of the seal oil pressure, the hydrogen will pass from the generator into the bearing drain enlargement and be vented to the atmosphere. The oil loop seal provides a barrier to prevent the hydrogen from entering the oil tank.

17. Piping

The oil system is designed to provide adequate flexibility for the interconnecting piping between the oil tank and the turbine-generator bearing housing. The oil system is composed of several hundred feet of piping. The oil supply piping is typically 304 stainless steel material, and the drain piping is carbon steel material. The oil piping is of welded or flanged construction. Flanged connections are limited to the applications that support assembly and disassembly of piping and components. The piping is usually welded to prevent leakage at joints and to minimize the potential for oil contamination. The piping is designed to withstand vibration and thermal expansion. Thick-walled, small-diameter piping supplies oil from the pumps to the bearings at a pressure of 15–25 psig. Oil flows from the bearings to the main oil tank by gravity through large-diameter return lines.

Return lines are designed to be no more than one-half full during normal operation so that the vapor extractor on the oil tank can pull a vacuum in the bearing housings and the oil can return with minimal flow restriction. Flow through the piping to the bearings is regulated by orifices or flow control valves at each bearing, and the flow rate is set to maintain the oil temperature rise close to the design value.

Section 5: Preventive Maintenance

This section includes the preventive and predictive maintenance recommendations for the combustion turbine lubrication system components and the testing and analysis recommendations for the lubricating oil. Information for this section was provided from EPRI report 1010191, *Turbine-Generator Auxiliary Systems, Volume 1: Turbine-Generator Lubrication System Maintenance Guide*, except where another source is indicated.

This section contains the following topics for lubrication system preventive maintenance:

- Component preventive and predictive maintenance tasks
- Component testing
- Monitoring the lubrication system
- Lube oil sampling, testing, and analysis
- Storage and handling of lubricants
- Oil flushing

Preventive maintenance (PM) is maintenance performed on a planned basis to minimize unexpected failures. PM uses regularly scheduled inspections, tests, services, repairs, replacements, and other tasks to prevent equipment failures. These maintenance activities are performed on a calendar or operating time interval to extend the life of equipment and prevent premature failure. Manufacturers usually include a list of these activities and their frequencies that will optimize the life and prevent failure of the equipment.

Predictive maintenance (PdM) consists of activities performed to assess equipment condition and to initiate and/or perform PM activities. The goal of PdM is to optimize the reliability and availability of equipment by determining the need for maintenance activities based on equipment condition. PdM assumes that equipment condition has indicators that can be monitored and analyzed to determine the need for condition-directed maintenance activities. PdM allows for the lowest cost and most effective maintenance program by determining the correct activity at the correct time. The standard technologies used in PdM are vibration testing and analysis, oil sampling and analysis, thermography, acoustic/ultrasonic testing, and electrical testing.

5.1 Component Preventive and Predictive Maintenance Tasks

1. Oil tank

The oil tank should be drained and inspected every 5 years and the following tasks performed:

- All deposits from the tank bottom should be removed and the tank should be cleaned. Some deposits commonly found include water, sediment, dust, dirt, sludge, lint, paint flakes, scale, welding materials and byproducts, gaskets, and insulation materials. A thorough wipe-down or scrubbing of the tank may be needed.
- The tank should be inspected for evidence of damage to internal protective coatings, corrosion, and scale. If present, damaged coatings, corrosion, or scale should be removed and the tank surfaces should be recoated as necessary. If the amount of corrosion or scale appears to be significant, measure the tank wall thickness readings after removal of the corrosion/scale. Since corrosion and scale most commonly develop in the presence of water, water intrusion sources should be eliminated as part of the corrective actions.
- The tank should be checked for signs of structural damage. If present, the cause should be identified and appropriate corrective actions should be performed. Repair of structural damage without identification and correction of the cause will likely result in similar damage re-occurring. All coatings should be restored after completion of work activities.
- Periodic inspection and replacement of the cover seals is necessary to control the amount of air and contaminants drawn into the lubrication system by the vapor extractor.
- The drain screens and strainers should be removed, cleaned, and inspected for damage on a quarterly basis. Before removing the screens for cleaning, the sediment, particulate, and water that collects upstream of the main oil tank screens should be blown into a bucket or drain connection.

The following information was taken from Section 6, "Preventive Maintenance Basis Database," in this report. The PM task *Strainer Cleaning* should be performed every 3–6 months. The objectives are to remove large debris from the turbine lube and seal oil system, to ensure that the strainers have not become plugged (thus restricting oil flow), and to verify the integrity of the wire mesh of the baskets themselves. Lube oil strainer cleaning should include the following actions:

- Remove any large debris trapped by the strainer baskets.
- Visually inspect the baskets for evidence of plugging, which might indicate problems with oil or the oil system.
- Visually inspect the baskets for damage to the wire mesh to verify integrity of the strainer itself. The strainer basket may be cleaned or replaced as indicated by this inspection.

- Reinstall the basket.
- Inspect the cover gasket for damage of deterioration and evidence of leakage. Replace the gasket as necessary or as required by plant procedures.

2. Immersion heaters

The immersion heaters should be checked annually for proper electrical operation. This is important if the turbine is off-line for extended periods. Electrical tests that can be performed on the heaters include a continuity test, an insulation test, and a resistance test.

As indicated in Section 6, "Preventive Maintenance Basis Database," in this report, a functional test should be performed annually, and an inspection should include the following actions:

- Open and inspect the heater electrical connections and leads for deterioration and evidence of localized heating.
- It is strongly suggested that the heaters and associated wiring be electrically tested to verify continuity and confirm that there are no grounds present. Verify that the amperage draw is within normal limits to ensure that the heater elements are operating properly. Inspect the heater controller for visual evidence of overheating, burnt contacts, and deteriorated or corroded wiring and terminations.
- Visually verify that the heater local indicator lamp (if present) is operating properly.

In addition, the heaters should be periodically cleaned. With the power disconnected, the heater can be removed from the tank and the scale or sediment cleaned off the tubes. The life of the heater can be maintained by keeping the elements clean. Caution should be exercised to keep the oil off the terminals, as this would cause a short circuit. The flange bolts should be periodically checked for tightness.

3. Vapor extractor/mist eliminator

The following actions are recommended every 3 months:

- Check the oil tank negative pressure (typically -0.5 and -1.5 in. water gauge) with all the oil tank standard access doors closed.
- Perform vibration analysis on the motor and blower for each extractor.

The following actions should be performed every 2 years:

- For vapor extractors with stuffing boxes, adjust the packing and grease and tighten the land nuts per the manufacturer's instructions.
- The vapor extractor system loop seals should be vented and then filled to the required level.

- Lubricate the fan/blower and motor bearings to ensure that the fan/blower rotates freely. Some extractors use packed stuffing boxes with a greased lantern ring. If necessary, grease and tighten the gland nuts per the manufacturer's instructions. Inadequate lubrication of the vapor extractor fans is a frequent cause of failure. This component should be scheduled for routine lubrication.
- Periodically inspect the vapor extractor pump motor vents. The vents should be clean with no dust or oil vapor. Clean the vents as needed based on the motor condition.
- Check the extractor suction and discharge piping to ensure that the piping is adequately supported to minimize strain on the extractor housing. Use of flexible connectors is normally recommended.
- Inspect the coupling for the extractor fan/blower and drive motor.

The following information was taken from Section 6, "Preventive Maintenance Basis Database," in this report. The PM task *Mist Eliminator and Demister Inspection* should be performed every 2–3 years. The objective is to maintain the condition of the oil by reducing the amount of hydrogen, water, air, dust, and other airborne contaminants. The inspection should include the following actions:

- Lubricate all bearings, and the shaft seal, if possible.
- Listen for noisy bearings and verify that the motor is running.
- Visually inspect the shaft seal for failure and degraded conditions.
- Listen for audible indications of problems with the impeller/fan, such as cracked blades and imbalance caused by buildup of dirt on blades.

4. Bearing oil pumps

The following periodic maintenance is recommended for the bearing oil pumps:

- Lubricate all externally lubricated pump bearings (that is, bearings not lubricated by the pumped oil) at the manufacturer's recommended interval for the specified service. Inspect and adjust packing glands, as applicable.
- Inspect coupling for evidence of looseness and wear. Inspect pump suction strainers during scheduled plant outages every two years. This can often be performed with the oil tank level lowered below the suction strainers or completely drained (commonly performed for tank inspection and cleaning) and the pumps in place. Clean as required.
- Overhaul according to manufacturer recommendations and/or trended performance degradation (for example, pump discharge pressure, increase in pump motor current, vibration, and so on). Typically, an overhaul should occur every 8–12 years.

The following information was taken from Section 6, "Preventive Maintenance Basis Database," in this report. The objective of the PM task *Pump and Motor Overhaul* is to restore each pump and motor to as-new condition through replacement with a new or reconditioned pump. The PM task *Pump Overhaul* should be performed every 8–12 years and include the following tasks:

1. Prior to removal and disassembly, check and record the uncoupled pump lift and motor thrust. Compare these readings to previous readings.
2. Document as-found / as-left dimensions on machine fits, clearances, and motor and pumps lifts.
3. Inspect and document conditions, including the presence of corrosion or erosion of welds, column piping, protective coatings, the suction strainer, and hardware such as bolts, fasteners, and gaskets.
4. In general, replace all components beyond manufacturer tolerances and specifications. Document wear and condition.
5. Inspect for damage, wear, and deterioration of all gaskets, O-rings, and elastomers.
6. Replace all gaskets, O-rings, and elastomers.
7. Replace anti-friction bearings. Inspect and document wear and condition.
8. Inspect pump casing and cover assemblies for thinning, cracking, erosion, and erosion / corrosion.
9. Inspect the pump casing vent for damage and pluggage. Clean as necessary.
10. Inspect shaft for damage, defects, and runout.
11. Inspect impeller and wear rings for wear, damage, and galling. Balance if required.
12. Inspect the seal stuffing box for damage, corrosion, and wear.
13. Replace seal, if present.
14. Clean and check for fit and flatness of all mating surfaces and joints.
15. Verify fit and tolerances of the motor support stand.
16. Inspect motor support stand for corrosion, cracked welds, and deformation.
17. Inspect for the general cleanliness and condition of all components.
18. Inspection for loose, missing, or damaged bolts and parts.
19. Inspection for abnormal noises and vibration, oil leaks, piping and flange leaks, damaged or missing insulation, abnormal pipe movement and damaged or misadjusted pipe hangers, and the general condition of expansion bellows.
20. Inspect pump mounting plate for damage and for missing or loose bolting.
21. Verify the presence and condition of the coupling guard.
22. Verify the proper operation and oil level of the oiler, if present.
23. Verify that the equipment is tagged and properly identified.

24. After reinstallation and prior to coupling, check and record the uncoupled pump lift and motor thrust. Compare these readings to historical data.
25. Verify proper motor rotation before coupling.
26. Perform any post-maintenance testing of the coupled motor and pump.
27. Note and report any seal leakage.
28. Perform diagnostics on old seal, such as determining the amount of seal face wear for wear rate evaluation, condition of elastomers, presence of any debris, condition of the spring, and the extent of the setscrew indentations into the shaft sleeve.
29. Check seal injection piping condition and verify flow.
30. Inspect the shaft and shaft sleeve for defects or damage.
31. Verify shaft runout.
32. Look for loose, missing, or damaged bolts, studs, nuts, and parts.
33. Replace with new correct seal.
34. Verify that the gland bolts are not loose or damaged.
35. Verify the proper seal injection flow.

The following information was taken from Section 6, "Preventive Maintenance Basis Database," in this report. The PM task *AC Pump and Motor Lubrication* is recommended to be performed every 2 years. The objective of *AC Pump and Motor Lubrication* is to prevent bearing failure from hardened and degraded grease and to perform a visual inspection for obvious damage and pump seal leakage. The *AC Pump and Motor Lubrication* task should contain the following actions:

- Using the recommended and approved grease, lubricate the upper and lower motor bearings.
- Inspect the motor coupling for evidence of abnormal wear or loose bolting, and verify that the coupling guard, if present, is in place.
- Inspect for general cleanliness.
- Inspect for loose, damaged, or missing parts and bolts.
- Inspect for damaged conduit or seal flex.
- Inspect for loose or damaged ground wires.
- Inspect for damaged junction boxes and gaskets.
- Inspect for excessive grease.
- Listen for unusual noises or vibrations.
- Verify the status of motor heaters, if present.
- Verify that the pump seal shows no evidence of leakage.

5. Bearing oil pump motors

Information for the emergency bearing oil pump motor and the seal oil pump DC motor was taken from EPRI report 1004357, *Predictive Maintenance Guidelines for Combustion Turbine Fleets and Combined-Cycle Plants*. On-line testing recommendations include the following:

- Partial discharge
- Motor current signature analysis

Off-line testing recommendations include the following:

- Winding resistance
- Insulation resistance
- Polarization index
- Capacitance
- Dissipation factor, power factor, or tip-up test
- Direct current hipot or step voltage
- Inductive imbalance
- Motor circuit evaluation

The following information provides general guidelines for the lubrication of motor bearings. The first step is to determine what type of bearings the motor uses. For grease-lubricated, anti-friction bearings, the following are guidelines for lubricating the bearings:

- Thoroughly clean the lubrication equipment and fittings. Dirt introduced into bearings during lubrication can cause bearing failure. Use only clean, fresh grease to avoid contamination.
- Before performing the scheduled lubrication, both the inlet and drain plugs should be removed. Pump the grease into the housing using a standard grease gun, suitable fitting, and light pressure.
- Lubricate the bearing of this motor type only when scheduled, usually every 2 years. Do not lubricate more frequently or with more grease than is recommended by the manufacturer. Excess grease creates heat and can damage motor bearings. The grease can get into the motor, where it collects dirt and causes insulation deterioration.
- Should bearings remain hot or noisy, remove the motor from service. Wash the motor housing with a solvent. Replace the bearing. Repack the bearings, assemble the motor, and fill the grease cavity.
- Whenever motors are disassembled for service, check the bearing housing. Wipe away any old grease. If there are any signs of grease contamination or breakdown, clean and re-pack the bearing system. Make sure that the inlet and outlet passages are free of dirt or chips.

For oil-lubricated sleeve bearings, the following are guidelines for lubricating the motor bearings:

- Generally, fractional horsepower motors with a wick lubrication system are oiled every 2000 hours of operation, or at least annually. Dirty, damp, or corrosive locations or heavy loading may require oiling at 3-month intervals or more often. Follow the manufacturer's recommendations for quantity, frequency, and type of oil.
- Many larger motors are equipped with oil reservoirs and usually a sight gauge to check proper level. As long as the oil is clean and light in color, the only requirement is to fill the cavity to the proper level with the oil recommended by the manufacturer. Do not overfill the cavity.
- If the oil appears discolored or dirty, or contains water, remove the drain plug. Flush the bearing with clean solvent until it comes out clear. Coat the plug threads with a sealing compound, replace the plug, and fill the cavity to the proper level. If the oil discolors frequently or becomes unusually dark, it is advisable to disassemble and inspect the bearing.
- Possible causes of dark oil include the wiping or melting of the babbitt bearing face, thrusting the shaft shoulder into the end face of the bearing, rubbing the oil rings on the reservoir housing, and improper or insufficient sealing of the bearing housing bolted surfaces.

The following information was taken from Section 6, "Preventive Maintenance Basis Database," in this report. The PM task *Motor Overhaul* should be performed every 8–12 years. The objective of the PM task *Motor Overhaul* focuses only on the removal and reinstallation portions of a complete overhaul or refurbishment. However, the task content does include a minimal outline of what should be accomplished to recondition the motor. While this text applies to DC motors, except in specific instances it may also be applied to AC motors. Most motors of this class, unless they are critical or specialized, are good candidates to be replaced. This decision is left to each individual to decide whether the economic advantage is to replace or rebuild. Two forms of Replace-Rebuild are possible. The first option is a simple replacement with a rebuilt or new motor, which for small motors is probably the best course of action. The second option is to completely rebuild including an inspection of the removed motor.

Motor replacement using a rebuilt or new motor includes the following actions:

1. Obtain all necessary clearances.
2. Uncouple the motor and the driven equipment.
3. Remove the motor and replace with new or rebuilt unit.
4. Test the motor for proper rotation, making sure the brushes are properly seated and free to move.
5. Install the coupling, making sure to properly lubricate the coupling.

6. Align the motor and driven equipment.
7. Perform post-maintenance testing on the motor and driven equipment.
8. Remove all tags and return to service.

Rebuilding the in-place motor or replaced motor includes the following actions:

1. Obtain all necessary clearances.
2. Uncouple the motor and the driven equipment.
3. Remove the motor.
4. Disassemble, taking note of the condition of the motor leads and windings.
5. Inspect the brushes and brush rigging for damage, loose or stuck brushes, and weak springs and clips.
6. Inspect the armature commutator for damage, uneven bars, high mica, and evidence of excessive sparking.
7. Turn the armature commutator to true round, undercut between each bar, and trim all high mica.
8. Spark the commutator, looking for shorted bars, and repair as necessary.
9. Test the armature winds for open or shorted windings and degraded insulation.
10. Inspect the armature for damaged insulation and loose pole pieces. Repair as necessary.
11. Inspect the armature leads for damage and degraded insulation.
12. Perform resistance testing on the stator leads and windings, making sure they meet minimal requirements (usually around 100 mega-ohms to ground and phase-to-phase). If less than 100 mega-ohms, the company policy may require the rewind or replacement of the motor.
13. Remove the bearing and inspect the shaft and endbells for wear and damage. Repair as necessary.
14. If no bearing damage is discovered, replace the bearing with new bearings of the exact same size and type.
15. Clean all endbell and stator surfaces using approved methods and solvents. If the windings are washed, be sure to dry them using approved methods until a satisfactory resistance reading is obtained.
16. Reinstall the brush rigging, making sure to replace all weak springs and clips. Be sure to test the rigging insulation, if present.
17. Reinstall all new brushes.
18. Inspect the stator and mounting flange for damage and warpage.
19. Reassemble the motor, replacing all shaft grease seals, O-rings, and gaskets.
20. Energize and test-run the motor, making sure to properly reseat the brushes, if possible.

21. Re-install the motor.
22. Test the motor for proper rotation and reseat brushes, if this was not done previously.
23. Install the coupling, making sure to properly lubricate the coupling.
24. Align the motor and driven equipment.
25. Perform any post-maintenance testing on the motor and driven equipment.
26. Remove all tags and return to service.

6. Emergency oil pump

See item #4, entitled Bearing oil pumps, in this section for pump recommendations.

7. Emergency bearing oil pump DC motor

Information for the emergency bearing oil pump motor and the seal oil pump DC motor was taken from EPRI report 1004357, *Predictive Maintenance Guidelines for Combustion Turbine Fleets and Combined-Cycle Plants*.

The critical motors for the combustion turbine lubrication system are the DC emergency oil pump motor and the DC emergency seal oil pump motor. Monitoring of critical motors is recommended to determine motor condition. Monitoring includes electric motor testing and diagnostics. The following parameters should be recorded and trended on a quarterly basis for the critical motors:

- **Supply voltage** – Look for imbalance in the supply voltage.
- **Operating current** – Portable clamp-on ammeters can be used to measure current.
- **Motor speed** – Portable tachometers can be used to measure speed.
- **Bearing temperature** – Bearing temperature is measured by a portable thermometer, temperature gun, or with a thermography camera on the outside of the bearing housings.
- **Winding temperature** – Thermographic cameras may be used to measure winding temperature.
- **Bearing vibration** – Vibration monitoring of motor bearings should include the standard vibration readings indicating balance, misalignment, bearing looseness, structural testing, and bearing condition monitoring. An effort should be made to know the natural resonance of each motor being tested.

If problems are detected with any of these monitoring technologies, then the monitoring should become more frequent—that is, monthly.

Information concerning the DC motor has been covered in item #5, entitled Bearing oil pump motors, in this section. This information includes guidelines for motor lubrication and recommendations on the PM task *Motor Overhaul*, taken from Section 6, "Preventive Maintenance Basis Database," in this report.

The following information was taken from Section 6, "Preventive Maintenance Basis Database," of this report: The PM task *DC Motor Brush Maintenance* should be performed every 6 months. The objective of this PM task is to ensure that the DC motor is capable of operating when required by replacing motor brushes that are known to be high-wear items.

8. Seal oil pump

See item #4, entitled Bearing oil pumps, in this section for pump recommendations.

9. Seal oil pump AC motor

See item #5, entitled Bearing oil pump motors, in this section for motor recommendations.

10. Seal oil pump DC motor

See item #7, entitled Emergency bearing oil pump DC motor, in this section for motor recommendations.

11. Oil coolers

Preventive maintenance on the oil coolers includes inspection and cleaning. Tube plugging and chemical cleaning of the oil coolers is covered in Section 7, "Component Maintenance," in this report.

For cleaning the oil coolers, if the amount of water required to remove the heat from the oil in the oil cooler has increased (as determined by the opening position of the temperature control valve), typically the oil cooler needs to be cleaned to improve cooler performance.

For the tube-and-shell design oil cooler, partial cleaning of the sides of the once-through and U-tube oil coolers can be performed by reverse flushing with the cooler and water boxes fully assembled. Reverse flushing is water flow in the opposite direction of the normal cooling water flow to loosen and flush silt or non-hardened sediment from the tubes. The cooling water piping and valves must be specifically designed for reverse flushing.

Partial cleaning of the water sides of the oil cooler without draining the cooler can also be accomplished with the following tasks:

1. Swap operation from the on-line oil cooler to the standby oil cooler. See Section 3.3.3, "Transfer Operations," in this report for directions on swapping oil coolers.
2. Isolate the standby oil cooler to be inspected.
3. Verify that the purge valve is in the closed position.
4. Open the vent valves and relieve any pressure on the standby oil cooler.
5. Remove the drain plug or open the drain valve on the standby cooler. Collect the fluid drained from the standby cooler.
6. Remove the stationary-side water box cover.
7. Use plastic sheeting to prevent water back-spray from getting on personnel and adjacent equipment.
8. Select air lances that are a compatible material with the tubes, have a slightly smaller diameter than the inside tube diameter, and can reach the full length of the tubes. Several styles of air lances are used, an open-ended lance for initially clearing a path through the tube and a closed-end lance with openings (for example, 1/16 in.) provided on the periphery of the lance for cleaning buildup on the tube walls.
9. Some of the lance tubes or solid rods may be adapted with non-metallic brushes or similar mechanical cleaning attachments to loosen stubborn deposits from the tubes. Ensure that any mechanical cleaning device is securely attached before inserting it in the tube. Retrieval of the device will be difficult if the device becomes lodged in the tube. Avoid scratching the internal surfaces of the tubes.
10. Through-tube, bristle-style, non-metallic darts may also be shot through the tube with air pressure. When this process is used, a containment area should be made at the discharge area of the cooler to contain the darts and collect material pushed through the tubes. The containment area also protects personnel and adjacent equipment from being damaged by the darts.
11. Blocked tubes should be verified by a borescope examination. The blocked tubes should be plugged to avoid future leak sources.
12. Perform an ultrasonic testing examination of the tubes for wall thinning, as applicable.
13. Replace the stationary-side water box cover.
14. Close all drain valves or plugs on the oil cooler.
15. Open the purge valve and observe the cooler sight glow indicator to verify that venting is occurring.
16. After the cooler is purged, close the purge valve.
17. Clear any tagging procedures.
18. Return the cooler to service or standby mode.

For the tube-and-shell heat exchanger, the tube side is subject to mineral deposits, erosion, corrosion, and fouling and should be opened for inspection based on plant trends and history, usually every 5 years. Maintenance is frequently required on the tube side because of service water fouling or tube mechanical failure.

The following are typical tasks for a tube-side inspection of the oil cooler:

1. Swap operation from the on-line oil cooler to the standby oil cooler. See Section 3.3.3, "Transfer Operations," in this report for directions on swapping oil coolers.
2. Isolate the standby oil cooler to be inspected.
3. Verify that the purge valve is in the closed position.
4. Open the vent valves and relieve any pressure on the standby oil cooler.
5. Remove the drain plug or open the drain valve on the standby cooler. Collect the fluid drained from the standby cooler.
6. Drain water from the tube side.
7. Remove the water box cover for the U-tube cooler design or remove the stationary end water box cover for the once-through design.
8. Remove the floating end water box cover for the U-tube design cooler.
9. Clean tubes as required and visually inspect. Borescopes are often used.
10. Perform ultrasonic testing of the tubes for wall thinning, as applicable.
11. Test the tubes for leaks.
12. Plug or replace any leaking tubes.
13. Re-assemble the water box cover.
14. Close all drain valves or plugs on the oil cooler.
15. Open the purge valve and observe the cooler sight glow indicator to verify venting is occurring.
16. After the cooler is purged, close the purge valve.
17. Clear any tagging procedures.
18. Return the cooler to service or standby mode.

The shell side is subject to less severe conditions. Unless there are tube-to-shell leaks or biological growth fouling, the shell side should need little attention. However, if the oil temperature is high, excessive cooling water flow is required, or there is an increase in the oil-side pressure drop, then a shell side inspection should be performed.

For the plate-and-frame heat exchanger, the following are typical tasks for opening, cleaning, and closing the heat exchanger:

1. Swap operation from the on-line oil cooler to the standby oil cooler. See Section 3.3.3, "Transfer Operations," in this report for directions on swapping oil coolers.
2. Isolate the heat exchanger from the lubrication system to include turning off water pumps, disconnecting pump motors, and closing all oil and water valves.
3. Wait until the cooler has cooled to about 104°F (40°C).
4. Drain the cooler of water and oil.
5. Disconnect the piping to the cooler.
6. Inspect the carrying bar, pressure plate roller, and tightening bolts.
7. Measure and mark the plates for reassembly of the plates later.
8. Remove the plates.
9. Use a soft brush and running water to clean and rinse the plates.
10. Chemical cleaning with nitric acid, sulfamic acid, citric acid, phosphoric acid, complexing agents, and sodium polyphosphates can be performed. Note that hydrochloric acid cannot be used on stainless steel plates, and hydrofluoric acid cannot be used on titanium plates. Also, any aluminum parts should be protected from exposure to these cleaning chemicals.
11. Inspect the sealing surfaces, ring gaskets, carrying bar, and pressure plate roller.
12. Re-gasket the plates that are needed.
13. Assemble the plates. If the installation order of the plates is correct, the edges form a honeycomb pattern.
14. Lubricate and tighten the bolts. Observe the manufacturer's maximum torque values.
15. Attach the piping to the cooler frame.
16. Reconnect the motor leads.
17. Return the heat exchanger to service or standby mode.

Observe the operation of the oil cooler. The following are typical problems and corrections for the plate-and-frame oil cooler:

- **Leakage between the flange and frame** – Remove any foreign matter and replace the gasket. Check for misalignment between the flange and the connection. Correct any misalignment.
- **Leakage between the plates** – Remove the damaged plate and the plate before or after the damaged plate. Repair any gasket leaks.
- **Leakage between the oil and water side** – Inspect the plates for cracks and replace any cracked plates.

- **Increased pressure drop across the cooler** – Inspect the cooling water inlet for blockage and remove any foreign material. Look for evidence of fouling on the plates and clean the plates. Verify that the water pump is operating correctly.
- **Heat transfer has decreased** – Open the cooler and clean the plates.

The following information concerning the plate and frame heat exchanger was taken from Section 6, "Preventive Maintenance Basis Database," in this report. The plate is subject to micro-fouling from scaling and macro-fouling because of poor water quality. Internal plate leakage from assembly errors, incorrect materials, and crevice corrosion is a concern. The plate gaskets are subject to leakage from material degradation and incorrect assembly. If present, the inlet and outlet nozzles are susceptible to erosion from an improper flow rate and corrosion from poor water quality. Performance monitoring and inspections are recommended to ensure that the heat exchanger is in good physical condition.

The PM task *Lube Oil Heat Exchanger – Plate and Frame – Disassemble and Clean* should be performed as required. The objective of the task is to restore the heat exchanger to original performance levels. If the heat exchanger is designed with bolted plenum cover, it can be used for internal cleaning of the inlet plenum. This interim measure may extend the period between the full disassembly and cleaning.

The PM task *Lube Oil Heat Exchanger – Plate and Frame – In-Situ Cleaning* should be performed as required. The objective of this task is to clean the major passages between the plates when indicated by performance monitoring.

12. Oil filters

Filter systems should be routinely checked or monitored to ensure proper operation. Filter and strainer elements should be cleaned and the frequency based on the manufacturer recommendations, trend history, and differential pressure across the filter/strainer.

The following steps should be followed when changing an oil filter:

1. Swap operation from the on-line filter to the standby filter. See Section 3.3.3, "Transfer Operations," in this report for directions on swapping filters.
2. Isolate the standby filter to be changed.
3. Verify that the purge valve is in the closed position.
4. Open the vent valves and relieve any pressure on the standby filter.
5. Remove the drain plug or open the drain valve on the standby filter. Collect the fluid drained from the standby filter.
6. Loosen and remove the filter head retaining bolts. Lift the filter head until it is clear of the filter housing.
7. Remove the filter element and clean/replace the filter.
8. Use new gaskets on the filter housing.

9. Replace the filter head and put the bolts back into position. Lubricate and tighten bolts on the filter head.
10. Close all drain valves or plugs on the filter vessel.
11. Open the purge valve and observe the filter sight flow indicator to verify that venting is occurring.
12. After the filter is purged, close the purge valve.
13. Return the filter to standby or in-service mode.

13. Instrumentation

Periodically check transmitters, switches, indicators, and control functions. Calibrate for accuracy as recommended by the manufacturer or as determined by plant or industry operating trends. The general recommended frequency for a calibration check is 2 years.

Critical pressure transmitters/switches are those instruments that perform an automatic control function. The bearing header pressure switch/transmitter is an example of an automatic control function.

Periodically check critical temperature monitoring devices (for example, RTDs, thermocouples, and transmitters) for indication of circuit integrity and/or accuracy. The most critical lubricating oil system temperature monitoring devices are those used for monitoring bearing temperatures and bearing oil drain temperature.

Periodically check that the oil tank level transmitter and switches are functioning properly by inspecting the float-type level transmitter and by verifying the calibration of the transmitter and switches. Ensure that the high- and low-level conditions are correctly measured for the alarm functions.

The following information was taken from Section 6, "Preventive Maintenance Basis Database," of this report. The PM task *Calibration* assures that the device is performing within specification, and confirms traceability to the NIST (National Institute of Standards and Technology) standards in demonstrating the absolute accuracy of the output. The PM task *Calibration* should include the following actions:

- Perform a visual inspection or walkdown, as far as practical, of the instrument's sensing line looking for evidence of air leaks; damaged, crushed, or broken tubing; loose tubing connections; loose or missing tubing clamps or corroded tubing and connectors; overheated components; and cracked terminations and cases.
- Performing a channel check provides an opportunity to make a general comparison between similar instruments monitoring the same process condition and assures that the output of the device is correct. The comparison values should be within a few percent of the medium channel and should not have drifted significantly from previously noted values.

- Verify and adjust, as needed, the device's zero span.
- Verify and adjust, as needed, the device's linearity and hysteresis.

14. Valves

The following PM actions are recommended for the valves in the lubrication system:

- **Check valves** – Check-valve operation can be observed by monitoring the pump transfer operation from the in-service pump to the standby pump. Externally inspect the check valve for leaks. If problems are suspected and disassembly and inspection are restrictive, vibration or ultrasonic testing can be performed to confirm suspected check valve problems. This may require repetitive pump swapping operations to cycle the check valve for monitoring.
- **Bearing header pressure regulating valve** – Look for external leaks. Confirm that the functional operation is able to regulate the constant required system oil pressure. Confirm that the valve regulates without erratic operation or unusual noise. Erratic operation or unusual noise may indicate flow leaking through the valve seat.
- **Oil cooler temperature control valve** – Inspect for stem packing leaks. Confirm that the functional operation appears without binding, operating smoothly and regulating cooling water to control oil in the correct temperature range. Check the remote temperature-sensing element periodically for accuracy. Correct leaks in the air-operated controls. Adjust settings as necessary in the air-operated controls. The valve stem should be visually verified as clean, free to operate, and lubricated as appropriate (reference manufacturer recommendations).
- **Manual valves** – Periodically clean and inspect the manual valves. Valve stems should be lubricated as recommended by the manufacturer or as the equipment history has indicated. Inspect the valve packing for leaks and adjust or replace packing as appropriate.
- **Relief valves** – Periodically check the relief valve settings as recommended by the manufacturer for the specific application.
- **Transfer valve** – Although many transfer valves have different operating mechanisms (for example, handles, handwheels, and hammer wheels) and differ in specific construction, most operate similarly. The best time to observe transfer valve condition is during a transfer operation. At that time, inspect externally for leaks. Look for free, smooth operation during transfer with no binding or sticking.

  Hammerblow operation mimics the motion of a hammer striking an anvil and delivers a quick, measured blow to free up a sticky valve without damaging the internal or external valve parts. If hammerblow operation is provided, no binding should occur during turning hammer-blows. If binding or sticking is encountered, the valve should be rebuilt or replaced at the next maintenance outage.

Verify that the stems are clean, lubricated, and have no unusual leakage from packing or seal rings. Observe the vent of the component removed from service to determine if leaking is occurring through the transfer valve. If leaking is occurring, the transfer valve should be scheduled for overhaul or replacement at the next maintenance outage.

15. Hydraulic system equipment

The following actions are listed for changing the hydraulic filters with the unit on-line:

1. Ensure that the standby filter has been isolated from the filter that is in-service.
2. Depressurize by opening the bleed plug at the top of the filter, one and one-half turns counter-clockwise.
3. Unscrew the top cover. The cover and element lift out as one unit.
4. Discard the used element.
5. Inspect the top cover O-ring and backup ring. Replace the O-ring if it is worn or damaged.
6. Install the new element.
7. Screw the top cover down and tighten the cover to 50 ft-lbs (67.8 N-m).
8. Close the bleed plug and tighten the cover to 20 ft-lbs (27.1 N-m).
9. The filter is equipped with an electrical indicator that automatically resets.

During normal operation, the accumulator isolation valves should be fully open and the accumulator drain valves should be fully closed.

16. Generator hydrogen detraining equipment

Generator hydrogen detraining oil traps, float traps, detraining chambers, loop seals, and the bearing drain enlargement should be inspected as recommended by the manufacturer.

17. Piping

A visual inspection of the pipe joints on the outside of the pipe (particularly all non-welded joints) should be made for oil leaks. A visual inspection of the piping supports and hangers should be performed to detect any bent or damaged hangers from high vibration or water hammering.

Periodically remove the drain piping clean-outs, if provided, and remove any debris accumulation. This should be performed in a top-down manner (that is, higher elevations to lower elevations) and during the turbine flushes preceding the final flush.

The coarse orifice strainers for each main bearing orifice should be periodically inspected. These inspections must be performed with the unit shut down and the lubrication system off. An opportune time to inspect these strainers is at the conclusion of an oil flush after an outage.

5.2 Component Testing

The following tests are recommended for safety and reliability of the lubrication system:

- **Emergency oil pump / DC motor automatic start testing** – Perform this test annually. The DC motor-driven emergency bearing oil pump is the last resort for the turbine-generator lubricating oil system and is critical in avoiding major turbine-generator damage. If the DC motor-driven pump fails to start and operate as designed and an initiating plant event occurs (turbine-generator trip with loss of all AC power), serious damage can be expected.

  Check the DC motor automatic start feature by simulating decreasing system pressure at the actuating pressure switch. Ensure that the emergency oil pump reaches rated speed in the designated time. Monitor the DC motor parameters (voltage drop, current load, temperature, and so on) for indication that the motor will perform its function. Make adjustments as recommended by the manufacturer.

The bearing oil header pressure at the front standard should be at least 12 psig with the pump running at full speed. The following is a common sequence of events for DC motor-driven emergency bearing oil pump start testing:

1. The battery chargers should be off.
2. Place the AC motor-driven bearing oil pump in operation.
3. Ensure that the DC motor-driven emergency bearing oil pump is in the "auto" position.
4. Turn the AC motor-driven bearing oil pump off.
5. Record how long it takes the DC motor-driven emergency bearing oil pump to reach rated speed. This can be done with a strobe-tachometer and a stopwatch.
6. Record the bearing oil header pressure at the front standard during the DC motor-driven emergency bearing oil pump start.
7. The bearing oil header pressure will drop when the AC motor-driven bearing oil pump is turned off. Once the DC motor-driven emergency bearing oil pump is at rated speed, the oil header pressure should be at least 12 psig and steady.
8. Note the severity of the bearing oil header pressure drop in evaluating the acceptability of results.

Periodic checks of the station DC batteries, battery chargers, DC buses, and DC breakers should also be performed.

The following information was taken from Section 6, "Preventive Maintenance Basis Database," in this report. The PM task is to perform a functional test for the DC motor-driven pumps every year. The objective of a functional test is to verify the automatic start features and confirm that the equipment has not failed since its last usage. The actions for the emergency oil pumps and motors are as follows:

1. Prior to testing for the DC motor-driven pumps, verify that the 110-VDC supply is available and capable of supplying the correct power.
2. Bypass the low lube oil pressure switch to initiate a pump start signal.
3. Listen for unusual noises that may indicate bearing problems or a loose motor cooling fan, if present.
4. Visually verify that the motor space heater turns off. The light on the connection box should go out when the motor starts.
5. Visually inspect the motor, coupling, and pump for damage, loose bolting, and missing guards.
6. Verify that the pump starts and reaches full speed.
7. Verify that the discharge pressure of the pump is in the normal range and appears to be steady. Trend this parameter.
8. Visually determine that the pump seal is not leaking.
9. Restore the pump to normal operation.

GE recommends that a test of the emergency oil pump and DC motor be performed with hand-operated test valves on a weekly basis. This is accomplished by opening a test valve between the pressure switch and orifice in the sensing line. Closing of the pressure switch contact energizes the motor, causing the motor starter red lamp to light. The respective oil pump gauge indicates the pump discharge pressure. This pressure signifies completion of the test. This test should take 2 seconds. If the test takes longer, then problems with entrained air in the pump casing should be investigated.

- **Routine automatic AC motor-driven pump start test** – Perform annually. Routinely perform a functional check of the lubricating oil system automatic AC motor-driven pump start capabilities. The standby bearing oil pump motor is set to automatically start on decreasing oil pressure. Each bearing oil pump motor should be tested with a decreasing oil pressure and low oil header pressure. The time it takes for the motor/pump to reach rated speed and the corresponding bearing oil header pressure drop should be recorded.

  GE recommends that the in-service bearing oil pump and the standby bearing oil pump be swapped on a weekly basis.

  When applicable, lift pumps are periodically checked with the unit operating at speed. Checking the lift pump operation at operating speed does not adversely affect the turbine operation. In addition to a routine test interval, lift pumps should be checked prior to any planned shutdown.

A bearing oil header pressure switch is usually interlocked with the lift pumps. The lift pumps cannot operate unless bearing oil pressure is available. This interlock switch should be tested prior to a lift-pump test. After testing the pressure switch, the lift pumps may be started to verify that they operate and develop pressure at the pump discharge.

- **Oil tank immersion heaters test** – The following information was taken from Section 6, "Preventive Maintenance Basis Database," in this report. The PM task is to perform a function test for the lube oil immersion heaters annually. The objective of a function test for the lube oil tank heaters is to assure the heater's availability to properly warm the turbine lube oil. The warming of the turbine oil assures the proper lubrication of the turbine and generator bearings during start-up conditions, especially in the colder months of the year. The actions for the lube oil tank heaters are the following:

  1. Open and inspect the heater electrical connections and leads for deterioration and evidence of localized heating.
  2. It is strongly suggested that the heaters and their wiring be electrically tested to verify continuity and that there are no grounds present. Verify that the amperage draw is within normal limits to assure that the heater elements are operating properly. Inspect the heater controller for visual evidence of overheating, burnt contacts, and deteriorated or corroded wiring and terminations
  3. Visually verify that the heater local indicator lamp (if present) is operating properly.

5.3 Monitoring the Lubrication System

This section contains recommendations for the monitoring the lubrication system. The recommendations are as follows:

- **Develop and maintain an oil usage log.** Oil usage should be monitored routinely and trend logs (manual or electronic) used to determine when problems exist. In addition to a physical system walkdown, oil consumption is one of the most important routine indicators of system boundary integrity and is important in identifying problems. Oil usage logs should record when oil is added to the oil tank and how much oil is added. Oil use should be relatively low and constant. If the rate of use changes noticeably, the cause of the change should be investigated in a timely manner.

  Large oil leaks will be obvious. Moderate leaks in remote locations of the unit may not be noticed and can still present significant hazards or become environmental issues. A relatively minor leak can progress to a larger leak in a relatively short time interval. Known minor leaks should be addressed.

  With the oil usage log, a list should be developed and kept current for known oil leaks. Large leaks require immediate attention. Minor leaks should be prioritized and scheduled for correction during appropriate times. Leaks should be removed from the list as they are corrected to keep the list current.

- **List the lubrication system parameters that should be monitored.** Table 5-1 is a compilation of the equipment and tasks for monitoring the lubrication system. The table was taken from EPRI report 1010191, *Turbine-Generator Auxiliary Systems, Volume 1: Turbine-Generator Lubrication System Maintenance Guide*.

Table 5-1
Recommended oil system condition monitoring

Equipment/Task	Daily	Monthly	Quarterly
Obtain Oil Sample for Analysis			Yes
Maintain Oil Usage Log	Yes		
Main Tank Oil Level		Yes	
Bearing Oil Header Pressure	Yes		
Bearing Supply Oil Temperature	Yes		
Individual Bearing Return Oil Temperature	Yes		
Oil Cooler Inlet Temperature	Yes		
Filter Pressure Differentials	Yes		
Strainer Pressure Differentials	Yes		
Equipment Trending			
Main Bearing Babbitt Temperatures			Yes
Main Bearing Drain Temperatures			Yes
Vibration			
Main Bearing Vibration Signature			Yes
Pump Vibration Signatures			Yes
Motor Vibration Signatures			Yes
Routine Visual			
Oil Tank Level	Yes		
Oil Tank Pressure	Yes		
Pump and Header Oil Pressures	Yes		
Operating Motor Current	Yes		
Vapor Extractor Vacuum	Yes		
Oil Cooler Temperatures	Yes		
General Noise and Vibration	Yes		
Bearing Oil Header Pressure	Yes		
Bearing Oil Supply Temperature	Yes		
Bearing Oil Drain Temperatures	Yes		
Bearing Oil Drain Flow	Yes		

The following information was obtained from Section 6, "Preventive Maintenance Basis Database," in this report.

- **Perform the PM task *Operator Rounds*.** The PM task *Operator Rounds* is a predictive maintenance task that takes place once per shift and is focused on verifying that all system operating parameters are within specifications, that there are no obvious leaks, that the filters are in good condition, and that the fluid is in good condition. It should include inspection for leaks; unusual noises; loose, damaged, or missing fasteners; unusual vibrations; and verification that all system operating parameters and levels are within their desired ranges.

  The PM task *Operator Rounds* focuses mainly on visible indications of grease leakage from bearings, leaking pump seals, and the general condition of the motors and pumps. Operator rounds should be performed each shift. The actions for the PM task are as follows:

  - Visually inspect for oil and water leaks.
  - Visually inspect for evidence of loose, damaged, or missing fasteners; abnormal pressures, temperatures, or flow rates; or alarms.
  - Verify the status of all system alarms.
  - Note indications of erratic operation and unusual noises.
  - Verify proper operational status of the tank oil heater.
  - Verify that the oil level in the tank is within normal parameters and does not appear to be milky, which would indicate the presence of water.
  - Verify that the oil filters are not clogged and bypassing and that the differential pressures are within specified limits of operation. Swap the filters if required to do so.
  - For the lube oil heat exchanger, visually inspect for oil and water leaks.
  - For the lube oil heat exchanger, verify proper operational parameters, such as flows, ΔT, and ΔP.

  The actions for the PM task *Operator Rounds* for all electric motors are as follows:

  - Inspect for general cleanliness.
  - Inspect for blocked inlet air screens.
  - Inspect for loose, damaged, or missing parts and bolts.
  - Inspect for damaged conduit or seal flex.
  - Inspect for loose/damaged ground wires.
  - Inspect for damaged junction boxes and gaskets.
  - Inspect for excessive grease.
  - Listen for unusual noises or vibrations, if operating.
  - Verify the status of motor heaters, if possible.

- **Perform the PM task *Performance Monitoring*.** The objective of the PM task *Performance Monitoring* is to identify degradation of equipment by evaluating and trending instrument readings and measure and trend efficiency parameters that could detect fouling, leaks, plugging, and other issues that could threaten performance or capacity. *Performance Monitoring* should be performed as required and include the following actions:
  - Track and trend the lube oil and cooling water temperatures and ΔT.
  - In addition, track and trend the following parameters: flow, set point of the temperature control valve, and ΔP.
- **Perform the PM task *System Owner Walkdown*.** The PM task *System Owner Walkdown* provides a high-level oversight of general system health and well-being, with the capability to search for leakage, improper system operation, and other faults that might not be readily observable during operator rounds. For example, the walkdown might identify incipient leakage, which appears as wetness around a joint, long before the fluid is evident on the floor. Many leakage occurrences are random events that appear suddenly and can develop rapidly. Many are the **result** of wear that develops over a few years between sliding surfaces or are the result of deterioration of elastomer seals. Fluid quality might play an important role in the development of such a leak. There are many joints, sliding seals, elastomers, and other opportunities to develop leakage in this system, with the result that fluid leakage is the most common degradation mechanism. The above considerations lead to a preference for monthly or quarterly system owner walkdowns.

  System Owner Walkdown is a PM task that focuses mainly on visible indications of grease leakage from bearings, leaking pump seals, and the general condition of the motors and pumps. *System Owner Walkdown* should be performed monthly and contain the following actions:
  - Visually inspect for oil and water leaks.
  - Visually inspect for evidence of loose, damaged, or missing fasteners; abnormal pressures, temperatures, or flow rates; or alarms.
  - Verify the status of all system alarms.
  - Note indications of erratic operation and unusual noises.
  - Verify proper operational status of the oil tank heater.
  - Verify that the oil level in the tank is within normal parameters and does not appear to be milky. A milky condition would indicate the presence of water.
  - Verify that the oil filters are not clogged and bypassing, and that the differential pressures are within specified limits of operation.

- Visually inspect the tank for damage and evidence of external rust and corrosion.
- For the lube oil heat exchanger, visually inspect for oil and water leaks.
- For the lube oil heat exchanger, verify proper operational parameters, such as flows, ΔT, and ΔP.

The PM task *System Owner Walkdown* should contain the following actions for all electric motors:

- Inspect for general cleanliness.
- Inspect for blocked inlet air screens.
- Inspect for loose, damaged, or missing parts and bolts.
- Inspect for damaged conduit or seal flex.
- Inspect for loose/damaged ground wires.
- Inspect for damaged junction boxes and gaskets.
- Inspect for excessive grease.
- Listen for unusual noises or vibrations, if operating.
- Verify the status of motor heaters, if possible.

- **Perform the PM task *Vibration Analysis*.** The PM task *Vibration Analysis* should be performed every 3 months. Vibration analysis ensures lube oil pump reliability and operability by detecting wear in bearings and other rotating components before failure occurs. *Vibration Analysis* should contain the following actions:
  - Data acquisition, data evaluation, and trending of all vibration sensors over the entire frequency spectrum, if possible.
  - Data acquisition should include accelerometers and phase angle data.
  - Evaluate for specific abnormal condition, such as misalignment, mass imbalance, and line frequency response.
  - Phase angle should be included for the first- and second-order harmonics.
  - For bearings being analyzed, bearing temperatures are recorded.
  - All data is trended.

5.4 Lube Oil Sampling, Testing, and Analysis

This section contains information regarding the sampling, testing, and analysis of the lubricating oil. Unless otherwise noted, the information in this section was taken from EPRI report 1010191, *Turbine-Generator Auxiliary Systems, Volume 1: Turbine-Generator Lubrication System Maintenance Guide.*

Turbine lubrication oil is typically composed of 98% or more mineral oil. The base oil is a highly refined petroleum-based mineral oil with an ISO (International Standards Organization) viscosity grade of 32 or 46. An oxidation inhibitor is added to stabilize the oil and provide a long service life.

Lubrication oils for combustion turbines may be identical to those used in steam turbines, depending on the operating temperatures for the oil. Water contamination is not generally a problem. Combustion turbines with a high-temperature center bearing require oils with improved high-temperature oxidation resistance. Many steam turbine lubricants available today have been modified to provide acceptable service in combustion turbines.

EPRI report 1004357, *Predictive Maintenance Guidelines for Combustion Turbine Fleets and Combined-Cycle Plants,* found the following typical problems with the lubrication system of combustion turbine units, listed in the frequency of occurrence:

1. Wrong oil
2. Excessive wear on internal components
3. Contamination – water, dirt, wear, process fluid
4. Additive depletion
5. Excessive oxidation

GE recommends that the oil be cleaned or replaced every 5 years.

5.4.1 Oil Sampling

The validity of oil analysis depends on the quality of the representative sample. Knowledge of the location of the internal bearing components and the oil flow path within the oil tank is necessary to obtain a representative sample.

Lubrication oil samples should be taken and analyzed on a 3-month interval for most combined-cycle plants. If problems are found, then the sampling should be shortened to a monthly interval until the problem is resolved. Also, oil sampling should be performed before and after outages.

Oil samples can be collected by the operators, maintenance technicians, or the lab personnel (if available on-site). The method of sampling is very important. Samples taken at the top, middle, and bottom of a reservoir will yield significantly different results. Once collected, the samples should be properly packaged and mailed to an oil testing laboratory for analysis or within the company, if these services exist.

When deciding where to sample a turbine oil system, the purpose of the analysis needs to be evaluated. A composite sample from the oil tank is adequate when investigating the bulk oil characteristics. Composite samples are taken from the top, middle, and bottom of the tank and the test results are averaged. However, wear debris, particle count data, and other tests may not be representative if an oil tank sample is taken.

The best place to obtain a used oil sample is from a turbulent flowing line in the return line from the bearings to the oil tank. The primary access to turbine oil is usually the oil tank. However, the oil tank is not a truly representative sample. If a sample can only be taken from the oil tank, it is important that it be taken in the same manner every time. The recommended location is the center of the oil tank. There are typically three methods used to obtain oil samples: the hand-held vacuum pump, drainage from the existing bearing drain line, and through a sample fitting.

For additional recommendations on oil sampling techniques and locations, see Section 4, "Sampling Techniques," in EPRI report 1004384, *Lube Oil Predictive Maintenance, Handling, and Quality Assurance Guideline*.

For information on lubrication system cleanliness monitoring, see the ASTM D4378-08 standard "Standard Practice for In-Service Monitoring of Mineral Turbine Oils for Steam and Gas Turbines." This standard covers the requirements for the effective monitoring of mineral turbine oils in service in steam and gas turbines, as individual or combined cycle turbines, used for power generation. This practice includes sampling and testing schedules to validate the condition of the lubricant through its life cycle, and by ensuring required improvements, to bring the present condition of the lubricant within the acceptable targets.

Oil samples should be taken from new oil deliveries to verify and trend the new oil for quality, cleanliness, and cross-contamination. A baseline for the new oil can then be established and used for subsequent monitoring programs. Typical problems associated with deliveries of new turbine lubricating oil are as follows:

- Incorrect label
- Wrong product
- Incorrect physical properties
- Incorrect chemical properties
- Contamination with dirt, water, or other contaminants
- Cross-contamination by other fluids

The May 1999 GE publication "Lubricating Oil Recommendations for Gas Turbines with Bearing Ambients Above 500°F (260°C)," GEK 32568E, contains a table of recommended oil tests and the corresponding values for new oil.

5.4.2 Oil Testing

The following information was taken from Section 6, "Preventive Maintenance Basis Database," in this report. The PM task *Oil Analysis* should be performed every 3 months. The objective is to ensure that the lubricating oil remains clean and its lubricity is kept within normal specifications. Lube oil analysis should include the following actions:

- Information on additional tests and their expected limits is available: ASTM, EPRI, and manufacturer documents and related references.
- Take samples from both the main lube oil tank and after the filter.
- Each sample should be tested for the following minimal characteristics: water; metal, such as babbitt; and physical properties, such as lubricity, including additive packages.
- Refer to manufacturer documents for limits and additional tests.
- All results should be trended.

The following is a partial list of tests that may be performed:

- Wear Particle Analysis
- Wear Metals and Organo-Metallic Additives
- Rotating Pressure Vessel Oxidation Test ASTM D2272
- Turbine Oil Oxidation Stability Test ASTM D943
- Remaining Useful Life Evaluation Routine ASTM D6971
- Determination of the Sludging and Corrosion Tendencies ASTM D4310
- Antioxidant Levels by Fourier Transform Infrared Analysis
- Foaming Characteristics ASTM D892
- Air Release Characteristics (Gas Bubble Separation) ASTM D3427
- Emulsion Characteristics ASTM D1401

Recommendations for the oil analysis of motor bearings include the following tests:

- Wear particle concentration
- Analytical ferrography
- Spectroscopy
- Lubricant analysis
- Water (crackle or Karl Fischer)

For grease lubricants, tests should include a spectroscopy and analytical ferrography.

Table 5-2 lists guidelines for used oil analysis, taken from EPRI report 1010191, *Turbine-Generator Auxiliary Systems, Volume 1: Turbine-Generator Lubrication System Maintenance Guide*.

Table 5-2
Used oil analysis guidelines

Characteristic	Method	Units	Specification	Minimum	Maximum
Color	Visual	Visual	Expected		
Clarity	Visual	Visual	Clear and bright		
Consistency	Visual	Visual	Uniform		
Water content	ASTM D6304	ppm	N/A		200
Metals analysis	ASTM D5185	ppm	N/A		Varies
Viscosity @ 40°C cSt	ASTM D445	cSt	ISO-VG Grade	3% Change	3% Change
Acid number	ASTM D974	mg/KOH gm	N/A		50% increase from new oil
Filterable solids	ASTM D4055 (5 micron Filter/ Pentane Mod)	mg/100ml			10 mg/100 ml
ISO Code	Automatic	ISO 4406			16/13/11
Foaming characteristics	ASTM D892 (SEQ I)	ml of foam			50/0
Air release properties	ASTM D3427	minutes			5
Water separability	ASTM D1401	ml of emulsion		Pass	
Oxidation inhibitors	Various methods		Agreed upon with supplier	25% of new	

5.4.3 Oil Analysis

Lubricating oil analysis can provide a general indicator of the equipment's internal condition. Analysis for the equipment internal component condition can be classified into three main categories, as described below.

- **Metal analysis** – Metal analysis detects wear rates, inorganic contaminants, and metallic related additive levels. The most common sources of wear metals in turbine systems are the following:
  - **Iron** – Gears, rolling element bearings, shafts, and rust
  - **Aluminum** – Journal bearings, pump vanes, and thrust washers
  - **Chromium** – Shaft alloy
  - **Copper** – Brushings, thrust washers, and oil cooler core tubes
  - **Lead** – Overlays, journal bearings
  - **Tin** – Bearing, plating
  - **Nickel** – Shafts and rolling element bearings
  - **Silver** – Silver solder
  - **Antimony** – Bearing material
- **Physical properties analysis** – Physical properties analysis detects water content, particulates, deposit-forming materials, acidity, viscosity, oxidation stability, foaming, air-release, emulsion characteristics, and microorganisms.

  Physical properties can change as a result of lubricant degradation due to contamination. Typically, degradation can result in changes to a number of physical properties. Table 5-3 summarizes potential problems with the recommended actions to restore system performance. The information is taken from EPRI report 1010191, *Turbine-Generator Auxiliary Systems, Volume 1: Turbine-Generator Lubrication System Maintenance Guide*.

Table 5-3
Troubleshooting for degraded physical properties in turbine lubrication oil

Problem Detected	Recommended Actions
Changes in viscosity – These changes in turbine oil occur most often due to the addition of oil with a different viscosity. If the viscosity changes due to degradation, the degradation is usually seen in other tests before the change in viscosity is detected.	• Check new oil data and addition records for comparison. • Resample or retest to confirm data. • Check additive; look for presence of wrong oil additive. • Check acid number.
Changes in acid number – Acid numbers change due to oil degradation. As oil degrades, either oxidatively or thermally, acid and sludge are formed.	• Check new oil data and addition records for comparison. • Resample or retest to confirm data. • Check additive; look for presence of wrong oil additive. • Check oxidation inhibitor levels. • Check filterable solids levels.
Changes in filterable solids – Solid and semisolid material can build up in the oil and are usually removed by the filter. When these solid and semisolid materials are not removed by the filter and become high in the oil sample, further investigation into the source is warranted. Oils with high filter residue may cause deposits to form. In many cases, deposits are formed from cross-contamination of rust and oxidation oil with anti-wear oil. In other cases, deposits form when there is no apparent contamination (see note below).	• Check particle count data to confirm. • Resample or retest to confirm data. • Check additive; look for presence of wrong oil additive. • Check oxidation inhibitor levels. • Identify the material.
Low oxidation resistance/remaining useful life evaluation routine values – Oxidation inhibitors should decrease slowly over time. At some point in time, the degradation may begin to accelerate. However, with a regular oil sample check for these additives (or their resistance to the various oxidation tests), there is not normally a point where they are depleted suddenly. If the oxidation inhibition suddenly drops, there are several areas that may be investigated.	• Resample or retest to confirm data. • Check for new oil addition of substandard oil. • Check operation of filter system and dehydrators.

Note: There are three likely reasons why deposits may form in the absence of apparent contamination:

- The type of base oil does not hold varnish precursors (polar compounds) in suspension as the older generation base oils do. These insolubles may form deposits.
- The antioxidant precipitates (polar compounds) are preferential oxides that cause the varnish.
- The new-generation anti-foam additives have less effective short-term air-release characteristics. The small air bubbles are adiabatically compressed and cause the varnish. Once deposits begin to form in the system, it can rapidly become a serious event. If the deposits are hard varnish-like materials, they may be stationary long enough to get to an outage and flush the system. However, if they are grease-like and unstable, they may come loose during normal operation and plug bearing oil lines.

Other changes in physical properties and/or resulting conditions that may be detected in turbine lubricating oil include the following:

- **Increased foaming** – Foaming problems may be identified in the unit or through sample analysis. If an increase in foam is suspected, a laboratory test will help narrow the reason to a mechanical or oil problem. If the oil condition is the source of the foam and not a change in mechanical condition, inhibitors may be added after consulting with the oil supplier. Too much foam inhibitor can cause other problems, such as poor air release characteristics.
- **Poor air release** – As with foam, air release problems may be identified in the unit or through sample analysis. Once this is identified as a problem, the lubricant supplier should be contacted for advice.

  Air entrainment is a problem in hydraulic systems because it makes the oil more compressible. Pure, highly refined oil generally has superior air release. Most additives slow the air release time. Highly refined mineral oils naturally separate rapidly from water. Unfortunately, most additives used to provide oxidation, corrosion, and air control tend to increase the ability of water to dissolve or emulsify in the oil. By limiting the concentration, polarity, and type of additives used, it is possible to minimize this effect. There are also additives that can increase the rate of water separation from the oil.
- **Poor water separability** – The water separability is very sensitive to contamination. ASTM D4378, “Standard Practice for In-Service Monitoring of Mineral Turbine Oils for Steam and Gas Turbines,” does not have limits for the used turbine oil analysis. Experience has shown that many used turbine oils fail this test. If there is a water ingress problem in the turbine, the separation of water from the oil is critical.

- **Poor rust test results** – Rust testing is not normally performed on used oil samples. If the test is performed and the results are in the failing category, the lubricant supplier should be contacted.
- **High water content** – Experience shows water content of 250 ppm (0.025%) to be fairly high for a well-maintained lubrication system.
- **High particle count** – Particle counts that are high should be investigated using a microscopic evaluation of the debris. Often it is not the turbine system that is causing the high particle count but the sampling method or contamination in the sampling bottles.
- **High microbial growth** – Bacterial contamination can be confirmed only by laboratory analysis by a microbiologist. As the bacteria grow, they produce visible colonies of biomass. This biomass has approximately the same color as clear silicone and looks like gelatin. One location where this biomass can be viewed is in the sight glass of an oil filtration skid.

- **Wear particle analysis** – Wear particle analysis detects wear mechanisms, concentration of wear particles, and some contaminants. Wear particle analysis is useful in determining the ferrous wear debris generated in a system that has oil-wetted components made of iron. However, it has limited use in turbine systems that have sleeve bearings and no oil-wetted iron components. Gas turbines with rolling element bearings and steam turbine systems that have gear reducers can benefit from the analysis of wear debris. If there is iron in a standard non-geared steam turbine, the wear debris analysis may be useful in determining if the debris contains red oxides (rust).

For additional recommendations on oil analysis, see Section 7, "Lubricant Analysis," in EPRI report 1004384, *Lube Oil Predictive Maintenance, Handling, and Quality Assurance Guideline*.

5.4.3.1 Oil System Varnish

The following information is an abstract from a presentation made by Chevron regarding turbine oil system varnish [reference: *Turbine Oil System Varnish*, Chevron, San Ramon, CA: 2005].

Many manufacturers have developed Group II-based turbine oils that have been in service for over 10 years. The high purity and low solubility of these oils are presenting a phenomenon known as *sludge/varnish deposit*. If ignored, this can cause operational problems, reduced efficiency, and reduced production reliability.

Varnish is also known as *lacquer*. It is a thin, insoluble film deposit that is usually found on bearings and servo-valves. It is a high-molecular-weight substance that is insoluble in oil. Oil insoluble materials are composed of more than 75% soft contaminants less than 1 micron in size and are not measured by traditional particle counts. The chemical compositions of these insoluble materials vary from case to case. Varnish on a gas turbine servo-valve may not be the same as a deposit found in a steam turbine oil system.

All turbine oils have the ability to generate insoluble materials given severe and/or unusual operating conditions. These insoluble materials create lubricant imbalance due to factors such as the following:

- Oxidation
- Cross-contamination
- Chemical contamination
- Micro-dieseling

Products of oil oxidation accumulate, and finished lubricant solvency can affect how oxidized components are held in suspension. As products come out of solution, critical clearances are reduced. Fine particles then can combine with oxidative products to cause sticking and change dimensions. Varnish deposits can interfere with the reliable performance of the fluid or interrupt the machine's mechanical movements.

Varnish can also contribute to corrosion and wear caused by embedded airborne contaminants and/or wear particles in the varnish layer. Severe cases can prevent hydrodynamic lubrication of bearing surfaces, resulting in unexpected bearing failure. Common failures and effects due to varnish include the following:

- Restriction and sticking in moving mechanical parts such as servo-valves or directional valves
- Increased component wear due to the varnish's propensity to attract dirt and other abrasive solid-particle contaminants
- Loss of heat transfer in heat exchangers due to the varnish's insulation effect
- Catalytic deterioration of the lubricant
- Plugging of small oil flow orifices and oil strainers
- Increase of friction and heat (system energy loss) since varnish acts as a heat insulator
- Reduction in filter efficiency and potential filter plugging
- Journal bearing failure, loss of hydrodynamic fluid film
- Increased maintenance costs due to cleanup and disposal of oil

With today's increasing demand for machinery reliability, there is a growing awareness of the impact that varnish has on lubrication and machinery health. Maintenance personnel should consider making closer inspections to detect the presence of varnish, researching its root causes, and taking steps to eliminate it. These improved practices have a positive effect on lubricant health and machine reliability while helping to reduce the risk of varnish-related problems.

Turbine manufacturers have published bulletins describing ways of mitigating the consequences of varnish and minimizing its adverse impact on turbine oil performance. See General Electric Technical Information Letter 1528-3, "Lube Oil Varnishing," dated November 18, 2005.

5.5 Storage and Handling of Lubricants

Turbine oil usage and past storage practices suggest that storage for turbine oils be limited to five years. The following steps are recommendations to enhance storage life:

- Oil should be kept in the largest practical sized container.
- Exposure to direct sunlight or to temperature extremes should be minimized.
- Drums should be covered and openings in other containers should be protected with filters to avoid entry of dirt, water, and other contaminants.
- Storage of oil in open containers should be minimized. Open containers are particularly subject to contamination by water, dirt, bacteria, or other fluids.

It is a good practice to filter oil when transferring it from one container to another. Mineral oils are compatible with most metals and many plastic materials. While in long-term storage, mineral oils should be stored such that any spillage would be contained.

For additional recommendations on the storage and handling of lubrication oil, see Section 3, "Storage and Handling," in EPRI report 1004384, *Lube Oil Predictive Maintenance, Handling, and Quality Assurance Guideline*.

5.6 Oil Flushing

When transferring turbine oil into a storage tank or into the main oil tank, attention should be given to the proper cleaning and flushing procedures. A detailed guide for cleaning and flushing is given in ASTM D6439, "Guide for Cleaning, Flushing, and Purification of Steam, Gas, and Hydroelectric Turbine Lubrication Systems." This standard covers types of contaminants, oil purification devices, contamination monitoring, and contamination control during building or refurbishing of turbine systems, lubrication system flushing, and maintenance of pure lubrication oil.

The turbine manufacturer may also give detailed instructions for cleaning and flushing the lubrication system. At a minimum, the following guidelines are given:

- A flush is satisfactory when refilling a system with new oil. Oil cleanliness or similar properties should be monitored during the flush to determine when the flush is complete.
- Supply and storage tanks should be clean and dry before use. Solvents or diesel fuel are not satisfactory cleaners unless they can be completely removed.
- Follow manufacturer recommendations for the best fluid velocity during flush.
- Filter the flush oil before use.
- Bypass system hydraulics during high-velocity flushes to protect against damage by particles.
- The turbine manufacturer should be consulted regarding desired oil cleanliness after flushing.

Section 6: Preventive Maintenance Basis Database

The Preventive Maintenance Basis Database (PMBD) is a database of equipment preventive maintenance (PM) information contained in a software tool developed by EPRI's Nuclear sector. Equipment additions have been made by EPRI's Generation sector. The PMBD application was developed to provide assistance to utility engineers who are charged with reducing and controlling preventive maintenance costs and improving equipment performance. For this to succeed, utilities require information on the most appropriate tasks and task intervals for the important equipment types, while accounting for the influences of functional importance, duty cycle, and service conditions.

The PMBD application is a Microsoft Windows client-server database application that utilizes the Microsoft .NET Framework technologies. It provides the utility user with a summary of industry experience on which tasks and task intervals represent a sound, cost-effective PM program for over 160 major component types. It also outlines the relationships between a component's degradation mechanisms and the factors that influence them, the time scale of progression to failure, and the opportunities to discover and prevent degraded conditions, so that utilities can adapt the programs to plant conditions.

The information for this section of the report was taken from the PMBD. Not all of the lubrication-system-related information contained in the database is reproduced here, but the intent of the report is to cover the highlights. For background information, explanations, and further data, please refer to the PMBD (EPRI product ID 1018758).

The first part of this section consists of several tables listing the failure location, degradation mechanism, degradation influence, discovery method, and frequency of the discovery method for some major equipment in the lubrication system. The second part of this section explains the objective of the preventive maintenance (PM) tasks, and the third part is a summary table of the PM tasks.

6.1 PMBD Tables

The following tables are presented in this section:

- Table 6-1: Plate and frame heat exchanger information
- Table 6-2: Bearing oil pump and AC motor information
- Table 6-3: Seal oil pump and AC and DC motor information
- Table 6-4: Lubrication supply component information
- Table 6-5: Emergency oil pump and DC motor information

Table 6-1
Plate and frame heat exchanger information from the Preventive Maintenance Basis Database

Failure Location	Degradation Mechanism	Degradation Influence	Discovery Method	Frequency of Discovery Method
Frame Bolting	Loose	Improper tightening	Inspection	Random
Plate	Micro-fouling	Scaling due to poor water quality	Inspection, Flow rate with ΔT and ΔP, Cleaning, Performance monitoring	Wear, 10 yrs.
Plate	Leakage (internal)	Mis-assembly (missing, upside down, or out of sequence)	Inspection, Post Maintenance Testing, Performance monitoring	Random
Plate – Stainless steel type	Crevice corrosion	Channel configuration with poor water quality	Inspection	Wear, 20 yrs.
Plate	Micro-fouling	Biofilm (slime) due to poor water quality especially with low flow rate	Inspection, Flow rate with ΔT and ΔP, Cleaning, Performance monitoring	Wear, 2 yrs.
Plate Gaskets	Material degradation leading to leakage	Age	Inspection, Durometer test, Gasket vent leakage	Unconditional wear, 15 yrs.
Plate Gaskets	Leakage	Improper assembly	Inspection, Gasket vent leakage	Random
Plate	Damage	Overtightening to improper dimension	Inspection	Random
Inlet and outlet nozzles, if present	Corrosion	Water quality	Inspection, NDE on non-coated nozzles)	Wear, 20–30 yrs.
Plate Gaskets	Material degradation leading to leakage	Improper material	Inspection, Gasket vent leakage	Wear, 5 yrs.
Plate Gaskets	Material degradation leading to leakage	Water chemistry, heat	Inspection, Gasket vent leakage	Wear, 5 yrs.
Inlet and outlet nozzles, if present	Erosion	Improper flow rate	Inspection, NDE on non-coated nozzles	Wear, 20–30 yrs.

Table 6-1 (continued)
Plate and frame heat exchanger information from the Preventive Maintenance Basis Database

Failure Location	Degradation Mechanism	Degradation Influence	Discovery Method	Frequency of Discovery Method
Pressure Plate	Corrosion	Leak-by of adjacent protective plate especially with raw water	Inspection, NDE, Ultrasonic testing	Wear, 10 yrs.
Foundation Bolting	Loose	Improper tightening	Inspection	Random
Plate	Leakage (external)	Misalignment	Inspection	Random
Plate	Macro-fouling	Improper filtration or chemical treatment of cooling fluid	Inspection, Flow rate with ΔT and ΔP, Cleaning, Performance monitoring	Wear, 3 months –1 yr.
Foundation Bolting	Corrosion	Environment	Inspection	Random
Plate – Stainless steel type	Pitting or crevice corrosion	Chlorides and fluorides from improper gasket material or cooling water quality	Inspection	Wear, 20 yrs.

Table 6-2
Bearing oil pump and AC motor information from the Preventive Maintenance Basis Database

Failure Location	Degradation Mechanism	Degradation Influence	Discovery Method	Frequency of Discovery Method
Pressure Transmitter	Electronics – component failure	Age, temperature	Channel check, inspection, system alarm, calibration	Unconditional wear, 10–15 yrs.
Pressure Transmitter	Electronics – toggle or selector switch contacts high resistance	Age, temperature	Channel check, inspection, system alarm, calibration	Random
Pressure Transmitter	Electronics – misadjustment	Personnel error	Channel check, inspection, system alarm, calibration	Random
Pump – Bearing – Thrust (grease lubricated)	Wear	Age, normal wear	Pump bearing temperature, vibration	Unconditional wear, 10–20 yrs.
Pump – Shaft Sleeve	Wear	Misalignment	Inspection, vibration	Random
Pressure Gauge	Failed diaphragm or Bourdon tube	Mis-operation, fatigue	Inspection, system monitoring, calibration	Random
Pressure Transmitter	Electronics – improper fuse installed	Personnel error	Channel check, inspection, system alarm, calibration	Random
Pressure Transmitter	Electronics – shorted to ground	Vibration, temperature, age	Channel check, inspection, system alarm, calibration	Unconditional wear, 5–10 yrs.
Pump – Bearing – Thrust (grease lubricated)	Wear	Degraded lubricant from age, contamination or water ingress, temperature	Pump bearing temperature, vibration	Wear, 2 yrs.
Pump – Bearing – Thrust (grease lubricated)	Wear	Insufficient or excessive lubricant	Pump bearing temperature, vibration	Random

Table 6-2 (continued)
Bearing oil pump and AC motor information from the Preventive Maintenance Basis Database

Failure Location	Degradation Mechanism	Degradation Influence	Discovery Method	Frequency of Discovery Method
Pressure Gauge	Incorrect or loss of indication	Improper in-service initiation (over pressurization causing shock)	Inspection, system monitoring, calibration	Random
Pump – Bearing – Thrust (grease lubricated)	Wear	Incorrect lubricant	Pump bearing temperature, vibration	Random
Pump – Bearing – Thrust (grease lubricated)	Wear	Excessive mechanical or hydraulic loading	Pump bearing temperature, vibration	Random
Pump – Bearing – Thrust (oil lubricated)	Wear	Incorrect lubricant	Pump bearing temperature, vibration	Random
Motor – Bearings: Rolling element	Wear	Maintenance induced errors from improper fit, handling and installation	Vibration	Random
Motor – Bearing Seal	Wear	Improper installation	Inspection	Random
Motor – Bearing Seal	Wear	Imbalance or misalignment	Inspection	Random
Motor – Bearing Seal	Wear	Material defect	Inspection	Random
Motor – Bearing Seal	Wear	Incorrect grease	Inspection	Random
Motor – Bearing Seal	Wear	Environment, debris	Inspection	Random
Motor – Stator – Windings	Insulation degradation	Improper installation techniques, manufacturing defect	Insulation tests, inspection	Random
Motor – Frame and Enclosure	Cracking	Structural resonance	Inspection, vibration	Random
Motor – Frame and Enclosure	Cracking	Impact damage	Inspection, vibration	Random

Table 6-2 (continued)
Bearing oil pump and AC motor information from the Preventive Maintenance Basis Database

Failure Location	Degradation Mechanism	Degradation Influence	Discovery Method	Frequency of Discovery Method
Motor – Stator – Windings	Insulation degradation	Contamination	Insulation tests, inspection	Random
Motor – Bearings: Rolling element	Wear	Excessive mechanical loading	Vibration	Random
Motor – Gaskets	Installation error	Personnel error	Inspection	Random
Motor – End Bell Fits	Damaged or misaligned	Personnel error	Inspection, vibration	Random
Motor – Leads and Electrical Connections	Insulation degradation	Manufacturing defect, damage	Inspection, insulation tests	Random
Motor – Leads and Electrical Connections	Insulation degradation	Improper testing	Inspection, insulation tests	Random
Motor – Leads and Electrical Connections	High resistance	Improper installation	Inspection, thermography, winding resistance	Random
Motor – Bearings: Rolling element	Wear	Incorrect or mixed grease	Inspection, vibration	Random
Motor – Bearings: Rolling element	Wear	Insufficient grease	Inspection, vibration	Random
Motor – External Cooling Fan and Cover	Loose	Installation error	Vibration, abnormal noise	Random
Pump – Bearing – Thrust (oil lubricated)	Wear	Excessive mechanical or hydraulic loading	Pump bearing temperature, vibration	Random
Pump – Bearing – Thrust (oil lubricated)	Wear	Insufficient lubricant	Pump bearing temperature, vibration	Random
Pump – Bearing – Thrust (oil lubricated)	Wear	Maintenance induced errors from improper fit, handling, installation, or wrong bearing	Pump bearing temperature, vibration	Random

Table 6-2 (continued)
Bearing oil pump and AC motor information from the Preventive Maintenance Basis Database

Failure Location	Degradation Mechanism	Degradation Influence	Discovery Method	Frequency of Discovery Method
Pump – Bearing Retainers	Corrosion	Improper material	Inspection, vibration	Random
Pump – Bearing Retainers	Cracked	Improper bearing or retainer installation	Inspection, vibration	Random
Pump – Bearing Retainers	Cracked	Manufacturing defect	Inspection, vibration	Random
Pump – Bearings – Sleeve	Wear	Contaminated oil	Vibration, increased motor current	Random
Pump – Bearings – Sleeve	Wear	Maintenance induced errors from improper fit, handling, or installation	Vibration	Random
Pump – Discharge Head	Damage from cavitation or recirculation	Improper NPSHA, low intake oil level, or Off-BEP operation	Vibration, audible noise, inspection, performance test	Random
Pump – Discharge Head	Damage from cavitation or recirculation	Air entrapment	Vibration, audible noise, inspection, performance test	Random
Pump – Column Piping	Loose bolting	Installation error	Inspection	Random
Pump – Motor Mount	Corrosion	Improper maintenance or installation (Loose motor mounting bolts, damaged flange)	Inspection, vibration	Random
Pump – Motor Mount	Cracked welds	Installation and removal stresses	Inspection, vibration	Random
Pump – Motor Mount	Cracked welds	Manufacturing defect	Inspection, vibration	Random
Pump – Motor Mount	Deformation	Installation and removal stresses	Inspection	Random

Table 6-2 (continued)
Bearing oil pump and AC motor information from the Preventive Maintenance Basis Database

Failure Location	Degradation Mechanism	Degradation Influence	Discovery Method	Frequency of Discovery Method
Pump – Gaskets	Leakage	Contaminated surface	Inspection, performance test	Random
Pump – Gaskets	Leakage	Improper fit	Inspection, performance test	Random
Pump – Gaskets	Leakage	Improper torque	Inspection, performance test	Random
Pump – Gaskets	Leakage	Poor surface condition, warped	Inspection, performance test	Random
Pump Impeller	Loose or failed impeller key or locking collar	Excessive fit tolerances	Performance test, vibration	Random
Pump Impeller	Loose or failed impeller key or locking collar	Improper material	Performance test, vibration	Random
Pump Impeller	Loose or failed impeller key or locking collar	Installation error	Performance test, vibration	Random
Pump Impeller	Physical damage	Debris	Hand rotation of the pump, vibration, inspection	Random
Pump Impeller	Wear	Improper vertical setting	Performance test, inspection, vibration	Random
Pump Impeller	Wear	Loose coupling	Inspection, vibration, audible noise, pump lift check	Random
Pump Impeller	Wear	Improper operation (Low NPSHA, e.g., low intake oil level or off-BEP operation)	Performance test, inspection, vibration	Random
Pump – Mechanical Seal	Leakage	Excessive axial shaft movement	Inspection	Random

Table 6-2 (continued)
Bearing oil pump and AC motor information from the Preventive Maintenance Basis Database

Failure Location	Degradation Mechanism	Degradation Influence	Discovery Method	Frequency of Discovery Method
Pump – Mechanical Seal	Leakage	Improper installation (misalignment of shaft, shaft sleeve runout)	Inspection	Random
Pump – Mechanical Seal	Leakage	Vibration	Inspection, monitor seal leakoff	Random
Pump – Motor Coupling	Imbalance or misalignment	Improper installation (e.g., improper key size, mismatched coupling halves or bolts)	Vibration	Random
Pump – Shaft	Bent	Improper installation	Inspection, vibration	Random
Pump – Shaft	Bent	Misalignment from rubbing at bearing, seal, impeller, or wear rings	Inspection, vibration	Random
Pump – Shaft	Cracked	Manufacturing defect	Vibration, impact testing (ringing), inspection	Random
Pump – Shaft	Cracked	Shaft whip, running at > 10% off-BEP	Vibration, impact testing (ringing), inspection	Random
Pump – Shaft	Loss of shaft diameter due to contact wear from shaft sleeve	Loose or failed fastener	Inspection, vibration	Random
Pump – Suction Screen	Clogged	Debris	Performance test, inspection, vibration, borescope	Random
Pump – Wear rings	Wear	Improper installation (e.g., improper fits, clearances, and tolerances, improper lift setting, misalignment)	Vibration, performance test, hand rotation, inspection	Random

Table 6-2 (continued)
Bearing oil pump and AC motor information from the Preventive Maintenance Basis Database

Failure Location	Degradation Mechanism	Degradation Influence	Discovery Method	Frequency of Discovery Method
Pump – Wear rings	Wear	Material selection	Vibration, performance test, hand rotation, inspection	Random
Motor – Cast Rotor: Rotor bars and shorting rings	Cracked	Manufacturing / design deficiency	Inspection, vibration, single phase rotor test, motor analysis	Random
Pump – Bearing Oil Supply Line, if present	Failed	Vibration	Inspection, performance test	Random
Motor – External Cooling Fan and Cover	Blade buildup	Dirt and debris	Inspection, vibration	Unconditional wear, 10–15 yrs.
Motor – Bearings: Rolling element	Wear	Normal wear	Vibration	Unconditional wear, 10–15 yrs.
Motor – Leads and Electrical Connections	High resistance	Start/stop cycling	Inspection, thermography, winding resistance	Unconditional wear, 10–15 yrs.
Motor – Shaft	Wear – Bearing fit and coupling areas	Low duty cycle	Vibration, inspection, alignment check	Unconditional wear, 10–15 yrs.
Motor – Shaft	Wear – Bearing fit and coupling areas	Degraded grease from contamination	Vibration, inspection, alignment check	Unconditional wear, 10–15 yrs.
Motor – Space Heaters	Open element	Age	Inspection, electrical tests	Unconditional wear 10–20 yrs.
Pump – Bearing – Thrust (oil lubricated)	Wear	Age, normal wear	Pump bearing temperature, vibration	Unconditional wear, 10–20 yrs.

Table 6-2 (continued)
Bearing oil pump and AC motor information from the Preventive Maintenance Basis Database

Failure Location	Degradation Mechanism	Degradation Influence	Discovery Method	Frequency of Discovery Method
Pump – Gaskets	Leakage	Age	Inspection, performance test	Unconditional wear, 10–20 yrs.
Pump – Mechanical Seal	Leakage	Normal wear	Inspection, monitor seal leakoff	Unconditional wear, 10–20 yrs.
Motor – Cast Rotor: Rotor bars and shorting rings	Deformation	Number of starts	Inspection	Unconditional wear, 10–20 yrs.
Motor – Cast Rotor: Rotor bars and shorting rings	Corrosion	Environment	Inspection	Unconditional wear, 15–30 yrs.
Motor – Cast Rotor: Rotor bars and shorting rings	Cracked	Number of starts, Thermal fatigue	Inspection, vibration, single phase rotor test, motor analysis	Unconditional wear, 15–30 yrs.
Pump – Motor Mount	Corrosion	Environment	Inspection, vibration	Unconditional wear, 20 yrs.
Pump – Shaft	Loss of shaft diameter	Wear from bearings	Inspection, vibration	Unconditional wear, 20–40 yrs.
Pump – Shaft	Loss of shaft diameter	Wear from shaft seal	Inspection, vibration	Unconditional wear, 20–40 yrs.
Motor – Leads and Electrical Connections	Insulation degradation	Age	Inspection, insulation tests	Unconditional wear, 40 yrs.
Motor – Stator – Windings	Insulation degradation	Age, duty cycle	Insulation tests	Unconditional wear, 40 yrs.
Pump – Motor Coupling	Wear	Normal use	Vibration	Unconditional wear, 40 yrs.
Pump – Bearings – Sleeve	Wear	Age, normal wear	Vibration	Unconditional wear, 40 yrs.
Motor – Cast Rotor: Rotor bars and shorting rings	Cracked	Age, Cycle fatigue	Inspection, vibration, single phase rotor test, motor analysis	Unconditional wear, 40 yrs.
Motor – Bearing Seal	Wear	Very low duty cycle	Inspection	Unconditional wear, 5–10 yrs.
Motor – Gaskets	Material degradation	Age	Inspection	Unconditional wear, 6–12 yrs.

Table 6-2 (continued)
Bearing oil pump and AC motor information from the Preventive Maintenance Basis Database

Failure Location	Degradation Mechanism	Degradation Influence	Discovery Method	Frequency of Discovery Method
Motor – Leads and Electrical Connections	High resistance	Contamination	Inspection, thermography, winding resistance	Unconditional wear, 6–12 yrs.
Motor – Bearings: Rolling element	Wear	Misalignment – Personnel error and wear of other components	Vibration	Wear, 3–6 months
Motor – Bearings: Rolling element	Wear	Excessive grease	Inspection, vibration	Wear, 4 months–1 yr.
Motor – Bearing Seal	Wear	Excessive grease	Inspection	Wear, 6 months
Pump – Motor Mount	Cracked welds	Excessive vibration	Inspection, vibration	Wear, 10 yrs.
Pump – Motor Mount	Loose fasteners	Excessive vibration	Inspection, vibration	Wear, 10 yrs.
Motor – Space Heaters	Broken, loose, grounded connections	Personnel error	Inspection, electrical tests	Wear, 10–20 yrs.
Motor – Space Heaters	Broken, loose, grounded connections	Vibration	Inspection, electrical tests	Wear, 10–20 yrs.
Motor – Bearings: Rolling element	Wear	Degraded grease – contamination, temperature, the greater the DT the shorter the life	Inspection, vibration	Wear, 2 yrs.
Motor – Shaft	Wear – Bearing fit and coupling areas	Corrosion	Vibration, inspection, alignment check	Wear, 4–8 yrs.
Pump – Bearing – Thrust (oil lubricated)	Wear	Degraded lubricant from age, contamination or water ingress, temperature	Pump bearing temperature, vibration	Wear, 5–10 yrs.
Pump – Gaskets	Leakage	Wrong material	Inspection, performance test	Wear, 5–10 yrs.

Table 6-2 (continued)
Bearing oil pump and AC motor information from the Preventive Maintenance Basis Database

Failure Location	Degradation Mechanism	Degradation Influence	Discovery Method	Frequency of Discovery Method
Motor – Stator – Windings	Insulation degradation	Vibration	Insulation tests	Wear, 6 yrs.
Motor – Leads and Electrical Connections	Insulation degradation	Contamination especially water	Inspection, insulation tests	Wear, 6–12 yrs.
Motor – Leads and Electrical Connections	Insulation degradation	High temperatures	Inspection, insulation tests	Wear, 6–12 yrs.
Pressure Switch	Elastomers, gaskets, and O-rings – Material degradation	Age	Inspection, system monitoring, calibration	Unconditional wear, 10 yrs.
Pressure Switch	Elastomers, gaskets, and O-rings – Material degradation	High temperature	Inspection, system monitoring, calibration	Wear, 5–10 yrs.
Pressure Switch	Elastomers, gaskets, and O-rings – Material degradation	Misapplication, material selection	Inspection, system monitoring, calibration	Random
Pressure Switch	Electrical switch – button sticking	Normal wear	Calibration, inspection, system monitoring	Unconditional wear, 12–15 yrs.
Pressure Switch	Electrical switch – cracked and/or corroded	Vibration	Calibration, inspection, system monitoring	Wear, 8–10 yrs.
Pressure Switch	Electrical switch – loose connections	Personnel error	Calibration, inspection, system monitoring	Random
Pressure Switch	Electrical switch – loose connections	Vibration	Calibration, inspection, system monitoring	Random
Pressure Switch	Sensing device – set point drift	Change in adjustment setting due to vibration	Calibration, system alarm	Random

Table 6-2 (continued)
Bearing oil pump and AC motor information from the Preventive Maintenance Basis Database

Failure Location	Degradation Mechanism	Degradation Influence	Discovery Method	Frequency of Discovery Method
Pressure Switch	Sensing device – set point drift	Leakage due to vibration	Calibration, system alarm	Wear, 5 yrs.
Pressure Switch	Sensing device – set point drift	Material degradation due to age, normal wear	Calibration, system alarm	Unconditional wear 5–10 yrs.
Pressure Switch	Sensing device – set point drift	Material degradation due to high temperature	Calibration, system alarm	Wear, 5 yrs.
Pressure Switch	Sensing line and tube fittings – broken or cracked line, or loose fitting	Personnel error (climbing or stepping on the line)	System alarm, inspection	Random
Pressure Switch	Sensing line and tube fittings – broken or cracked line, or loose fitting	Vibration	System alarm, inspection	Wear, 3–6 yrs.
Pressure Switch	Sensing line and tube fittings – fitting leak	Maintenance induced (connect/reconnect)	System alarm, inspection	Unconditional wear, 10 yrs.
Instrumentation – Indication and Alarm with separate sensors, if present	Incorrect or loss of indication	Drift	Inspection, system monitoring, calibration	Unconditional wear, 4–6 yrs.
Instrumentation – Indication and Alarm with separate sensors, if present	Leaking sensors	Elastomer aging	Inspection, system monitoring, calibration	Unconditional wear, 5–10 yrs.

Table 6-2 (continued)
Bearing oil pump and AC motor information from the Preventive Maintenance Basis Database

Failure Location	Degradation Mechanism	Degradation Influence	Discovery Method	Frequency of Discovery Method
Instrumentation – Indication and Alarm with separate sensors, if present	Loose, leaking sensors	Vibration, improper installation	Inspection	Random
Instrumentation – Indication and Alarm with separate sensors, if present	Loss of indication	Damaged or failed detector, damaged wire, grounded, loose connection	Inspection, system monitoring, calibration	Random
Pressure Transmitter	Electronics – drift	Age, temperature	Channel check, inspection, system alarm, calibration	Unconditional wear, 5 yrs.
Pressure Transmitter	Electronics – component Failure	Vibration	Channel check, inspection, system alarm, calibration	Random
Pressure Gauge	Incorrect or loss of indication	Drift	Inspection, system monitoring, calibration	Unconditional wear, 4–6 yrs.
Pressure Transmitter	Electronics – loose card in socket, or loose fuse in fuse holder	Vibration, temperature, age	Channel check, inspection, system alarm, calibration	Unconditional wear, 5–10 yrs.
Pressure Transmitter	Electronics – toggle or selector switch contacts high resistance	Infrequent cycling of switch	Channel check, inspection, system alarm, calibration	Unconditional wear, 5–10 yrs.
Pump – Bearing – Thrust (grease lubricated)	Wear	Maintenance induced errors from improper fit, handling, installation, or wrong bearing	Pump bearing temperature, vibration	Random

Table 6-3
Seal oil pump and AC and DC motor information from the Preventive Maintenance Basis Database

Failure Location	Degradation Mechanism	Degradation Influence	Discovery Method	Frequency of Discovery Method
DC Motor – Bearing Seal	Wear	Imbalance or misalignment	Inspection	Random
Pressure Transmitter – Electronics	Component Failure	Age, temperature	Channel check, inspection, system alarm, calibration	Unconditional wear, 10–15 yrs.
Pressure Transmitter – Electronics	Toggle or Selector switch failure	Age, temperature	Channel check, inspection, system alarm, calibration	Random
DC Motor – Rotor – Commutator	Insulation degradation	Centrifugal forces, duty cycle	Commutator resistance checks, inspection	Unconditional wear, 3–5 yrs.
Pressure Transmitter – Electronics	Misadjustment	Personnel error	Channel check, inspection, system alarm, calibration	Random
DC Motor – Brushes	Wear	Personnel error (wrong length, position, type, polarity, spring tension)	Inspection	Random
Pump – Bearing – Thrust (grease lubricated)	Wear	Age, normal wear	Pump bearing temperature, vibration	Unconditional wear, 10–20 yrs.
Pump – Shaft Sleeve	Wear	Misalignment	Inspection, vibration	Random
DC Motor – Bearings: Rolling element	Wear	Degraded grease – contamination, temperature, the greater the DT the shorter the life	Inspection, vibration	Wear, 2 yrs.
DC Motor – Shaft	Wear – Bearing fit and coupling areas	Corrosion	Vibration, inspection, alignment	Wear, 4–8 yrs.
DC Motor – Bearing Seal	Wear	Excessive grease	Inspection	Wear, 6 months
DC Motor – Space Heaters	Open element	Age	Inspection, electrical tests	Unconditional wear, 10–20 yrs.
DC Motor – Bearings: Rolling element	Wear	Insufficient grease	Inspection, vibration	Random

Table 6-3 (continued)
Seal oil pump and AC and DC motor information from the Preventive Maintenance Basis Database

Failure Location	Degradation Mechanism	Degradation Influence	Discovery Method	Frequency of Discovery Method
DC Motor – Armature	Loose pole pieces and banding	Temperature	Vibration, mechanical noise, inspection	Unconditional wear, 15–30 yrs.
Pressure Gauge	Failed diaphragm or Bourdon tube	Mis-operation, fatigue	Inspection, system monitoring, calibration	Random
DC Motor – Bearings: Rolling element	Wear	Excessive grease	Inspection, vibration	Wear, 4 months–1 yr.
DC Motor – Armature	Corrosion	Environment	Inspection	Unconditional wear, 5–15 yrs.
Pressure Transmitter – Electronics	Improper fuse installed	Personnel error	Channel check, inspection, system alarm, calibration	Random
DC Motor – Armature – Windings	Insulation degradation	Manufacturing design/deficiency	Inspection, insulation tests, motor analysis	Random
DC Motor – Leads and Electrical Connections	Insulation degradation	Age	Insulation tests, inspection	Unconditional wear, 40 yrs.
DC Motor – Stator – Windings	Insulation degradation	Vibration	Insulation tests	Wear, 6 yrs.
Pressure Transmitter – Electronics	Shorted to ground	Vibration, temperature, age	Channel check, inspection, system alarm, calibration	Unconditional wear, 5–10 yrs.
DC Motor – Brush Rigging	Loose or misadjusted	Personnel error	Inspection, operation, brush maintenance	Random
DC Motor – Leads and Electrical Connections	High resistance	Start/stop cycling	Inspection, thermography, winding resistance	Unconditional wear, 10–15 yrs.
Pump – Bearing – Thrust (grease lubricated)	Wear	Degraded lubricant from age, contamination or water ingress, temperature	Pump bearing temperature, vibration	Wear, 2 yrs.

Table 6-3 (continued)
Seal oil pump and AC and DC motor information from the Preventive Maintenance Basis Database

Failure Location	Degradation Mechanism	Degradation Influence	Discovery Method	Frequency of Discovery Method
DC Motor – Rotor – Commutator	Wear	Brush sticking	Vibration, erratic operation, inspection	Random
DC Motor – Leads and Electrical Connections	High resistance	Contamination	Inspection, thermography, winding resistance	Unconditional wear, 6–12 yrs.
DC Motor – Bearing Seal	Wear	Improper installation	Inspection	Random
DC Motor – Bearing Seal	Wear	Incorrect grease	Inspection	Random
DC Motor – Gaskets	Material degradation	Age	Inspection	Unconditional wear, 6–12 yrs.
DC Motor – Stator – Windings	Insulation degradation	Improper installation techniques, manufacturing defect	Insulation tests, inspection	Random
Pump – Bearing – Thrust (grease lubricated)	Wear	Insufficient or excessive lubricant	Pump bearing temperature, vibration	Random
DC Motor – Space Heaters	Broken, loose, grounded connections	Personnel error	Inspection, electrical tests	Wear, 10–20 yrs.
Pressure Gauge	Incorrect or loss of indication	Improper in-service initiation (over pressurization causing shock)	Inspection, system monitoring, calibration	Random
Pump – Bearing – Thrust (grease lubricated)	Wear	Incorrect lubricant	Pump bearing temperature, vibration	Random
DC Motor – Leads and Electrical Connections	High resistance	Improper installation	Inspection, thermography, winding resistance	Random
DC Motor – Armature	Fretting	Vibration	Vibration, inspection	Random
Pump – Bearing – Thrust (grease lubricated)	Wear	Excessive mechanical or hydraulic loading	Pump bearing temperature, vibration	Random

Table 6-3 (continued)
Seal oil pump and AC and DC motor information from the Preventive Maintenance Basis Database

Failure Location	Degradation Mechanism	Degradation Influence	Discovery Method	Frequency of Discovery Method
Pump – Bearing – Thrust (oil lubricated)	Wear	Incorrect lubricant	Pump bearing temperature, vibration	Random
AC Motor – Bearings: Rolling element	Wear	Maintenance induced errors from improper fit, handling and installation	Vibration	Random
AC Motor – Bearing Seal	Wear	Improper installation	Inspection	Random
AC Motor – Bearing Seal	Wear	Imbalance or misalignment	Inspection	Random
AC Motor – Bearing Seal	Wear	Material defect	Inspection	Random
AC Motor – Bearing Seal	Wear	Incorrect grease	Inspection	Random
AC Motor – Bearing Seal	Wear	Environment, debris	Inspection	Random
AC Motor – Stator – Windings	Insulation degradation	Improper installation techniques, manufacturing defect	Insulation tests, inspection	Random
AC Motor – Frame and Enclosure	Cracking	Structural resonance	Inspection, vibration	Random
AC Motor – Frame and Enclosure	Cracking	Impact damage	Inspection, vibration	Random
AC Motor – Stator – Windings	Insulation degradation	Contamination, moisture	Insulation tests, inspection	Random
AC Motor – Bearings: Rolling element	Wear	Excessive mechanical loading	Vibration	Random
AC Motor – Gaskets	Installation error	Personnel Error	Inspection	Random
AC Motor – End Bell Fits	Damaged or misaligned	Personnel Error	Inspection, vibration	Random
AC Motor – Leads and Electrical Connections	Insulation degradation	Manufacturing defect, damage	Inspection, insulation tests	Random

Table 6-3 (continued)
Seal oil pump and AC and DC motor information from the Preventive Maintenance Basis Database

Failure Location	Degradation Mechanism	Degradation Influence	Discovery Method	Frequency of Discovery Method
AC Motor – Leads and Electrical Connections	Insulation degradation	Improper testing	Inspection, insulation tests	Random
AC Motor – Leads and Electrical Connections	High resistance	Improper installation	Inspection, thermography, winding resistance	Random
AC Motor – Bearings: Rolling element	Wear	Incorrect or mixed grease	Inspection, vibration	Random
AC Motor – Bearings: Rolling element	Wear	Insufficient grease	Inspection, vibration	Random
AC Motor – External Cooling Fan and Cover	Loose	Installation error	Vibration, abnormal noise	Random
Pump – Bearing – Thrust (oil lubricated)	Wear	Excessive mechanical or hydraulic loading	Pump bearing temperature, vibration	Random
Pump – Bearing – Thrust (oil lubricated)	Wear	Insufficient lubricant	Pump bearing temperature, vibration	Random
Pump – Bearing – Thrust (oil lubricated)	Wear	Maintenance induced errors from improper fit, handling, installation, or wrong bearing	Pump bearing temperature, vibration	Random
Pump – Bearing Retainers	Corrosion	Improper material	Inspection, vibration	Random
Pump – Bearing Retainers	Cracked	Improper bearing or retainer installation	Inspection, vibration	Random
Pump – Bearing Retainers	Cracked	Manufacturing defect	Inspection, vibration	Random
Pump – Bearings – Sleeve	Wear	Contaminated oil	Vibration, increased motor current	Random
Pump – Bearings – Sleeve	Wear	Maintenance induced errors from improper fit, handling, or installation	Vibration	Random

Table 6-3 (continued)
Seal oil pump and AC and DC motor information from the Preventive Maintenance Basis Database

Failure Location	Degradation Mechanism	Degradation Influence	Discovery Method	Frequency of Discovery Method
Pump – Discharge Head	Damage from cavitation or recirculation	Improper NPSHA, low intake oil level, or Off-BEP operation	Vibration, audible noise, inspection, performance test	Random
Pump – Discharge Head	Damage from cavitation or recirculation	Air entrapment	Vibration, audible noise, inspection, performance test	Random
Pump – Column Piping	Loose bolting	Installation error	Inspection	Random
Pump – Motor Mount	Corrosion	Improper maintenance or installation (Loose motor mounting bolts, damaged flange)	Inspection, vibration	Random
Pump – Motor Mount	Cracked welds	Installation and removal stresses	Inspection, vibration	Random
Pump – Motor Mount	Cracked welds	Manufacturing defect	Inspection, vibration	Random
Pump – Motor Mount	Deformation	Installation and removal stresses	Inspection	Random
Pump – Gaskets	Leakage	Contaminated surface	Inspection, performance test	Random
Pump – Gaskets	Leakage	Improper fit	Inspection, performance test	Random
Pump – Gaskets	Leakage	Improper torque	Inspection, performance test	Random
Pump – Gaskets	Leakage	Poor surface condition, warped	Inspection, performance test	Random
Pump – Impeller	Loose or failed impeller key or locking collar	Excessive fit tolerances	Performance test, vibration	Random
Pump – Impeller	Loose or failed impeller key or locking collar	Improper material	Performance test, vibration	Random
Pump – Impeller	Loose or failed impeller key or locking collar	Installation error	Performance test, vibration	Random

Table 6-3 (continued)
Seal oil pump and AC and DC motor information from the Preventive Maintenance Basis Database

Failure Location	Degradation Mechanism	Degradation Influence	Discovery Method	Frequency of Discovery Method
Pump – Impeller	Physical damage	Debris	Hand rotation of the pump, vibration, inspection	Random
Pump – Impeller	Wear	Improper vertical setting	Performance test, inspection, vibration	Random
Pump – Impeller	Wear	Loose coupling	Inspection, vibration, audible noise, pump lift check	Random
Pump – Impeller	Wear	Improper operation (Low NPSHA, e.g., low intake oil level or off-BEP operation)	Performance test, inspection, vibration	Random
Pump – Mechanical Seal	Leakage	Excessive axial shaft movement	Inspection	Random
Pump – Mechanical Seal	Leakage	Improper installation (misalignment of shaft, shaft sleeve runout)	Inspection	Random
Pump – Mechanical Seal	Leakage	Vibration	Inspection, monitor seal leakoff	Random
Pump – Motor Coupling	Imbalance or misalignment	Improper installation (e.g., improper key size, mismatched coupling halves or bolts)	Vibration	Random
Pump – Shaft	Bent	Improper installation	Inspection, vibration	Random
Pump – Shaft	Bent	Misalignment from rubbing at bearing, seal, impeller, or wear rings	Inspection, vibration	Random
Pump – Shaft	Cracked	Manufacturing defect	Vibration, impact testing (ringing), inspection	Random

Table 6-3 (continued)
Seal oil pump and AC and DC motor information from the Preventive Maintenance Basis Database

Failure Location	Degradation Mechanism	Degradation Influence	Discovery Method	Frequency of Discovery Method
Pump – Shaft	Cracked	Shaft whip, running at > 10% off-BEP	Vibration, impact testing (ringing), inspection	Random
Pump – Shaft	Loss of shaft diameter due to contact wear from shaft sleeve	Loose or failed fastener	Inspection, Vibration	Random
Pump – Suction Screen	Clogged	Debris	Performance test, inspection, vibration	Random
Pump – Wear rings	Wear	Improper installation (e.g., improper fits, clearances, and tolerances, improper lift setting, misalignment)	Vibration, performance test, hand rotation, inspection	Random
Pump – Wear rings	Wear	Material selection	Vibration, performance test, hand rotation, inspection	Random
AC Motor – Cast Rotor: Rotor bars and shorting rings	Cracked	Manufacturing/design deficiency	Inspection, vibration, single phase rotor test, motor analysis	Random
Pump – Bearing Oil Supply Line, if present	Failed	Vibration	Inspection, performance test	Random
AC Motor – External Cooling Fan and Cover	Blade buildup	Dirt and debris	Inspection, vibration	Unconditional wear, 10–15 yrs.
AC Motor – Bearings: Rolling element	Wear	Normal wear	Vibration	Unconditional wear, 10–15 yrs.
AC Motor – Leads and Electrical Connections	High resistance	Start/stop cycling	Inspection, thermography, winding resistance	Unconditional wear, 10–15 yrs.
AC Motor – Shaft	Wear – Bearing fit and coupling areas	Low duty cycle	Vibration, inspection, alignment check	Unconditional wear, 10–15 yrs.

Table 6-3 (continued)
Seal oil pump and AC and DC motor information from the Preventive Maintenance Basis Database

Failure Location	Degradation Mechanism	Degradation Influence	Discovery Method	Frequency of Discovery Method
AC Motor – Shaft	Wear – Bearing fit and coupling areas	Degraded grease from contamination	Vibration, inspection, alignment check	Unconditional wear, 10–15 yrs.
AC Motor – Space Heaters	Open element	Age	Inspection, electrical tests	Unconditional wear, 10–20 yrs.
Pump – Bearing – Thrust (oil lubricated)	Wear	Age, normal wear	Pump bearing temperature, vibration	Unconditional wear, 10–20 yrs.
Pump – Gaskets	Leakage	Age	Inspection, performance test	Unconditional wear, 10–20 yrs.
Pump – Mechanical Seal	Leakage	Normal wear	Inspection, monitor seal leakoff	Unconditional wear, 10–20 yrs.
AC Motor – Cast Rotor: Rotor bars and shorting rings	Deformation	Number of starts	Inspection	Unconditional wear, 10–20 yrs.
AC Motor – Cast Rotor: Rotor bars and shorting rings	Corrosion	Environment	Inspection	Unconditional wear, 15–30 yrs.
AC Motor – Cast Rotor: Rotor bars and shorting rings	Cracked	Number of starts, Thermal fatigue	Inspection, vibration, single phase rotor test, motor analysis	Unconditional wear, 15–30 yrs.
Pump – Motor Mount	Corrosion	Environment	Inspection, vibration	Unconditional wear, 20 yrs.
Pump – Shaft	Loss of shaft diameter	Wear from bearings	Inspection, vibration	Unconditional wear, 20–40 yrs.
Pump – Shaft	Loss of shaft diameter	Wear from shaft seal	Inspection, vibration	Unconditional wear, 20–40 yrs.

Table 6-3 (continued)
Seal oil pump and AC and DC motor information from the Preventive Maintenance Basis Database

Failure Location	Degradation Mechanism	Degradation Influence	Discovery Method	Frequency of Discovery Method
AC Motor – Leads and Electrical Connections	Insulation degradation	Age	Inspection, insulation tests	Unconditional wear, 40 yrs.
AC Motor – Stator – Windings	Insulation degradation	Age, duty cycle	Insulation tests	Unconditional wear, 40 yrs.
Pump – Motor Coupling	Wear	Normal use	Vibration	Unconditional wear, 40 yrs.
Pump – Bearings – Sleeve	Wear	Age, normal wear	Vibration	Unconditional wear, 40 yrs.
AC Motor – Cast Rotor: Rotor bars and shorting rings	Cracked	Age, Cycle fatigue	Inspection, vibration, single phase rotor test, motor analysis	Unconditional wear, 40 yrs.
AC Motor – Bearing Seal	Wear	Very low duty cycle	Inspection	Unconditional wear, 5–10 yrs.
AC Motor – Gaskets	Material degradation	Age	Inspection	Unconditional wear, 6–12 yrs.
AC Motor – Leads and Electrical Connections	High resistance	Contamination	Inspection, thermography, winding resistance	Unconditional wear, 6–12 yrs.
AC Motor – Bearings: Rolling element	Wear	Misalignment – Personnel error and wear of other components	Vibration	Wear, 3–6 months
AC Motor – Bearings: Rolling element	Wear	Excessive grease	Inspection, vibration	Wear, 4 months–1 yr.
AC Motor – Bearing Seal	Wear	Excessive grease	Inspection	Wear, 6 months
Pump – Motor Mount	Cracked welds	Excessive vibration	Inspection, vibration	Wear, 10 yr.
Pump – Motor Mount	Loose fasteners	Excessive vibration	Inspection, vibration	Wear, 10 yrs.

Table 6-3 (continued)
Seal oil pump and AC and DC motor information from the Preventive Maintenance Basis Database

Failure Location	Degradation Mechanism	Degradation Influence	Discovery Method	Frequency of Discovery Method
AC Motor – Space Heaters	Broken, loose, grounded connections	Personnel error	Inspection, electrical tests	Wear, 10–20 yrs.
AC Motor – Space Heaters	Broken, loose, grounded connections	Vibration	Inspection, electrical tests	Wear, 10–20 yrs.
AC Motor – Bearings: Rolling element	Wear	Degraded grease – contamination, temperature, the greater the DT the shorter the life	Inspection, vibration	Wear, 2 yrs.
AC Motor – Shaft	Wear – Bearing fit and coupling areas	Corrosion	Vibration, inspection, alignment check	Wear, 4–8 yrs.
Pump – Bearing – Thrust (oil lubricated)	Wear	Degraded lubricant from age, contamination or water ingress, temperature	Pump bearing temperature, vibration	Wear, 5–10 yrs.
Pump – Gaskets	Leakage	Wrong material	Inspection, performance test	Wear, 5–10 yrs.
AC Motor – Stator – Windings	Insulation degradation	Vibration	Insulation tests	Wear, 6 yrs.
AC Motor – Leads and Electrical Connections	Insulation degradation	Moisture	Inspection, insulation tests	Wear, 6–12 yrs.
AC Motor – Leads and Electrical Connections	Insulation degradation	High temperatures	Inspection, insulation tests	Wear, 6–12 yrs.
Pressure Switch – Elastomers, gaskets, and O-rings	Material degradation	Age	Inspection, system monitoring, calibration	Unconditional Wear, 10 yrs.
Pressure Switch – Elastomers, gaskets, and O-rings	Material degradation	High temperature	Inspection, system monitoring, calibration	Wear, 5–10 yrs.

Table 6-3 (continued)
Seal oil pump and AC and DC motor information from the Preventive Maintenance Basis Database

Failure Location	Degradation Mechanism	Degradation Influence	Discovery Method	Frequency of Discovery Method
Pressure Switch – Elastomers, gaskets, and O-rings	Material degradation	Misapplication, material selection	Inspection, system monitoring, calibration	Random
Pressure Switch – Electrical switch	Button sticking	Normal wear	Calibration, inspection, system monitoring	Unconditional Wear, 12–15 yrs.
Pressure Switch – Electrical switch	Cracked and/or corroded	Vibration	Calibration, inspection, system monitoring	Wear, 8–10 yrs.
Pressure Switch – Electrical switch	Loose connections	Personnel error	Calibration, inspection, system monitoring	Random
Pressure Switch – Electrical switch	Loose connections	Vibration	Calibration, inspection, system monitoring	Random
Pressure Switch – Sensing device	Set point drift	Change in adjustment setting due to vibration	Calibration, system alarm	Random
Pressure Switch – Sensing device	Set point drift	Leakage due to vibration	Calibration, system alarm	Wear, 5 yrs.
Pressure Switch – Sensing device	Set point drift	Material degradation due to age, normal wear	Calibration, system alarm	Unconditional Wear, 5–10 yrs.
Pressure Switch – Sensing device	Set point drift	Material degradation due to high temperature	Calibration, system alarm	Wear, 5 yrs.
Pressure Switch – Sensing line and tube fittings	Broken or cracked line, or loose fitting	Personnel error (climbing or stepping on the line)	System alarm, inspection	Random
Pressure Switch – Sensing line and tube fittings	Broken or cracked line, or loose fitting	Vibration	System alarm, inspection	Wear, 3–6 yrs.
Pressure Switch – Sensing line and tube fittings	Fitting leak	Maintenance induced (connect/reconnect)	System alarm, inspection	Unconditional Wear, 10 yrs.

Table 6-3 (continued)
Seal oil pump and AC and DC motor information from the Preventive Maintenance Basis Database

Failure Location	Degradation Mechanism	Degradation Influence	Discovery Method	Frequency of Discovery Method
Instrumentation – Indication and Alarm with separate sensors, if present	Incorrect or loss of indication	Drift	Inspection, system monitoring, calibration	Unconditional wear, 4–6 yrs.
Instrumentation – Indication and Alarm with separate sensors, if present	Leaking sensors	Elastomer aging	Inspection, system monitoring, calibration	Unconditional wear, 5–10 yrs.
Instrumentation – Indication and Alarm with separate sensors, if present	Loose, leaking sensors	Vibration, improper installation	Inspection	Random
Instrumentation – Indication and Alarm with separate sensors, if present	Loss of indication	Damaged or failed detector, damaged wire, grounded, loose connection	Inspection, system monitoring, calibration	Random
DC Motor – Bearings: Rolling element	Wear	Misalignment – Personnel error and wear of other components	Vibration	Wear, 3–6 months
DC Motor – Rotor – Commutator	Wear	Normal wear	Vibration, erratic operation, inspection	Unconditional wear, 10–15 yrs.
DC Motor – Leads and Electrical Connections	Insulation degradation	Improper testing	Insulation tests, inspection	Random
DC Motor – Rotor – Commutator	Loose on shaft and loose segments	Vibration	Vibration, erratic operation, inspection	Wear, 10–30 yrs.
Pressure Transmitter – Electronics	Drift	Age, temperature	Channel check, inspection, system alarm, calibration	Unconditional wear, 5 yrs.

Table 6-3 (continued)
Seal oil pump and AC and DC motor information from the Preventive Maintenance Basis Database

Failure Location	Degradation Mechanism	Degradation Influence	Discovery Method	Frequency of Discovery Method
DC Motor – Armature – Windings	Insulation degradation	Contamination	Inspection, insulation tests, motor analysis	Unconditional wear, 10–20 yrs.
DC Motor – Bearings: Rolling element	Wear	Normal wear	Vibration	Unconditional wear, 10–15 yrs.
DC Motor – Armature	Loose pole pieces and banding	Overspeed	Vibration, erratic operation, inspection	Random
DC Motor – Armature	Brazed joint failure	Cycle fatigue	Vibration, inspection	Unconditional wear, 15–30 yrs.
DC Motor – Shaft	Wear – Bearing fit and coupling areas	Degraded grease from contamination	Vibration, inspection, alignment	Unconditional wear, 10–15 yrs.
DC Motor – Armature – Windings	Insulation degradation	Vibration	Inspection, insulation tests, motor analysis	Wear, 6 yrs.
DC Motor – Rotor – Commutator	Wear	Improper brushes	Vibration, erratic operation, inspection	Random
DC Motor – Rotor – Commutator	Insulation degradation	Improper assembly	Commutator resistance checks, inspection	Random
DC Motor – Frame and Enclosure	Cracking	Structural resonance	Inspection, vibration	Random
Pressure Transmitter – Electronics	Component Failure	Vibration	Channel check, inspection, system alarm, calibration	Random
DC Motor – Bearing Seal	Wear	Environment, debris	Inspection	Random
DC Motor – Armature – Windings	Insulation degradation	Low battery voltage – high current	Insulation tests, motor analysis	Unconditional wear, 40 yrs.
Pressure Gauge	Incorrect or loss of indication	Drift	Inspection, system monitoring, calibration	Unconditional wear, 4–6 yrs.

Table 6-3 (continued)
Seal oil pump and AC and DC motor information from the Preventive Maintenance Basis Database

Failure Location	Degradation Mechanism	Degradation Influence	Discovery Method	Frequency of Discovery Method
DC Motor – Shaft	Wear – Bearing fit and coupling areas	Low duty cycle	Vibration, inspection, alignment	Unconditional wear, 10–15 yrs.
DC Motor – Rotor – Commutator	Corrosion	Environment	Inspection	Wear, 5–15 yrs.
DC Motor – Stator – Windings	Insulation degradation	Age, duty cycle	Insulation tests	Unconditional wear, 40 yrs.
DC Motor – Gaskets	Installation error	Personnel error	Inspection	Random
DC Motor – Machine Fits	Damaged or misaligned	Personnel error	Inspection	Random
DC Motor – Armature	Mechanical interference between armature and stator	Wear of other components	Vibration, mechanical noise, inspection, alignment check	Random
DC Motor – Leads and Electrical Connections	Insulation degradation	Temperature	Insulation tests, inspection	Wear, 6–12 yrs.
DC Motor – Frame and Enclosure	Cracking	Impact damage	Inspection, vibration	Random
DC Motor – External Cooling Fan and Cover	Blade buildup	Dirt and debris	Vibration	Unconditional wear, 10 yrs.
DC Motor – Brush Rigging	Weak spring or clip	Normal use	Inspection, operation	Unconditional wear, 20 yrs.
DC Motor – Bearings: Rolling element	Wear	Incorrect or mixed grease	Inspection, vibration	Random
DC Motor – Bearings: Rolling element	Wear	Maintenance induced errors from improper fit, handling and installation	Vibration	Random
DC Motor – Bearing Seal	Wear	Very low duty cycle	Inspection	Unconditional wear, 5–10 yrs.

Table 6-3 (continued)
Seal oil pump and AC and DC motor information from the Preventive Maintenance Basis Database

Failure Location	Degradation Mechanism	Degradation Influence	Discovery Method	Frequency of Discovery Method
DC Motor – Stator – Windings	Insulation degradation	Contamination	Insulation tests, inspection	Random
Pressure Transmitter – Electronics	Loose card in socket, or loose fuse in fuse holder	Vibration, temperature, age	Channel check, inspection, system alarm, calibration	Unconditional wear, 5–10 yrs.
Pressure Transmitter – Electronics	Toggle or Selector switch contacts high resistance	Infrequent cycling of switch	Channel check, inspection, system alarm, calibration	Unconditional wear, 5–10 yrs.
Pump – Bearing – Thrust (grease lubricated)	Wear	Maintenance induced errors from improper fit, handling, installation, or wrong bearing	Pump bearing temperature, vibration	Random
DC Motor – Rotor – Commutator	Loose on shaft and loose segments	Improper assembly	Vibration, erratic operation, inspection	Random
DC Motor – Brushes	Wear	Normal wear	Inspection	Unconditional wear, 20–40 yrs.
DC Motor – Brushes	Wear	Commutator surface and raised mica	Inspection	Wear, 1–2 yrs.
DC Motor – Armature – Windings	Insulation degradation	Heat above rated	Insulation tests, Motor Analysis	Wear, 6–12 yrs.
DC Motor – Armature	Brazed joint failure	Manufacturing design/ deficiency	Vibration, inspection	Random
DC Motor – Rotor – Commutator	Loose on shaft and loose segments	Centrifugal forces, duty cycle	Vibration, erratic operation, inspection	Unconditional wear, 15–30 yrs.
DC Motor – Rotor – Commutator	Wear	Incorrect brush setup	Vibration, erratic operation, inspection	Random
DC Motor – External Cooling Fan and Cover	Loose	Installation error	Vibration, abnormal noise	Random

Table 6-3 (continued)
Seal oil pump and AC and DC motor information from the Preventive Maintenance Basis Database

Failure Location	Degradation Mechanism	Degradation Influence	Discovery Method	Frequency of Discovery Method
DC Motor – Leads and Electrical Connections	Insulation degradation	Contamination especially water	Insulation tests, inspection	Wear, 6–12 yrs.
DC Motor – Rotor – Commutator	Insulation degradation	Vibration	Commutator resistance checks, inspection	Wear, 40 yrs.
DC Motor – Leads and Electrical Connections	Insulation degradation	Manufacturing defect, damage	Insulation tests, inspection	Random
DC Motor – Space Heaters	Broken, loose, grounded connections	Vibration	Inspection, electrical tests	Wear, 10–20 yrs.
DC Motor – Rotor – Commutator	Wear	Environment	Vibration, erratic operation, inspection	Wear, 1–3 yrs.
DC Motor – Bearing Seal	Wear	Material defect	Inspection	Random
DC Motor – Bearings: Rolling element	Wear	Excessive mechanical loading	Vibration	Random

Table 6-4
Lubrication supply component information from the Preventive Maintenance Basis Database

Failure Location	Degradation Mechanism	Degradation Influence	Discovery Method	Frequency of Discovery Method
Pressure Switch	Elastomers, gaskets, and O-rings – material degradation	Age	Inspection, system monitoring, calibration	Unconditional wear, 10 yrs.
Discharge Check Valves – Lube Oil Pumps	Broken or weak spring	Age, normal use	Inspection	Unconditional wear, 20 yrs.
Pressure Switch	Sensing line and tube fittings – fitting leak	Maintenance induced (connect/reconnect)	System alarm, inspection	Unconditional wear, 10 yrs.
Pressure Switch	Sensing device – set point drift	Leakage due to vibration	Calibration, system alarm	Wear, 5 yrs.
Pressure Switch	Sensing line and tube fittings – broken or cracked line, or loose fitting	Personnel error (climbing or stepping on the line)	System alarm, inspection	Random
Mist Eliminator (Vapor Extractor) Discharge Check Valve	Loose or stuck disk	Buildup of contaminants	Inspection, loss of tank negative pressure, oil leaks	Random
Pressure Regulator	Drift	Change in spring constant, elastomer	Calibration, Replace	Unconditional wear, 6 yrs.
Pressure Switch	Sensing device – set point drift	Material degradation due to age, normal wear	Calibration, system alarm	Unconditional wear, 5–10 yrs.
Pressure Regulator	Elastomer (diaphragm) failure	Age	Calibration, Replace	Unconditional wear, 15–20 yrs.
Pressure Switch	Electrical switch – loose connections	Vibration	Calibration, inspection, system monitoring	Random
Lube Oil	Contamination from water	Environmental ingress of water, humidity, condensation – especially in outside units	Oil Analysis	Random
Three-way Transfer Valve – Duplex Type	Shoe separation leading to leak by	Elastomer failure, incorrect material	Inspection	Random

Table 6-4 (continued)
Lubrication supply component information from the Preventive Maintenance Basis Database

Failure Location	Degradation Mechanism	Degradation Influence	Discovery Method	Frequency of Discovery Method
Pressure Switch	Sensing device – set point drift	Material degradation due to high temperature	Calibration, system alarm	Wear, 5 yrs.
Tank Immersion Heaters	Open or grounded element	Normal use – buildup of deposits, varnish, or sludge from oil leading to overheating of the element	Continuity test, insulation test	Unconditional wear, 20 yrs.
Tank Immersion Heaters	High resistance connection	Normal use from heating and cooling of the connection itself	Resistance test	Unconditional wear, 20 yrs.
Tank Immersion Heaters	Degraded seal	Age, heat, environmental attack	Inspection	Unconditional wear, 20 yrs.
Discharge Check Valves – Lube Oil Pumps	Disk separation	Manufacturing defects in welds	Inspection	Random
Discharge Check Valves – Lube Oil Pumps	Disk separation	Wear on hinge pin	Inspection	Unconditional wear, 40 yrs.
Discharge Check Valves – Lube Oil Pumps	Disk separation	Wear on hinge pin holes in disk and body	Inspection	Unconditional wear, 40 yrs.
Mist Eliminator (Vapor Extractor) Discharge Check Valve	Disk separation	Manufacturing defects in welds	Inspection	Random
Mist Eliminator (Vapor Extractor) Discharge Check Valve	Disk separation	Wear on hinge pin	Inspection	Unconditional wear, 20 yrs.
Mist Eliminator (Vapor Extractor) Discharge Check Valve	Disk separation	Wear on hinge pin holes in disk and body	Inspection	Unconditional wear, 20 yrs.

Table 6-4 (continued)
Lubrication supply component information from the Preventive Maintenance Basis Database

Failure Location	Degradation Mechanism	Degradation Influence	Discovery Method	Frequency of Discovery Method
Piping Bolted Flanged Joints	Loose	Personnel error	Re-tightening	Random
Piping Bolted Flanged Joints	Degraded gaskets	Age	Inspection	Unconditional wear, 5–10 yrs.
Piping Bolted Flanged Joints	Degraded gaskets	Improper material or manufacturing	Inspection	Random
Piping and Tubing Supports – Hangers, Clamps, etc.	Loose or broken	Age	Inspection	Unconditional wear, 5–10 yrs.
Piping and Tubing Supports – Hangers, Clamps, etc.	Loose or broken	Personnel or design error	Inspection	Random
Piping and Tubing Supports – Hangers, Clamps, etc.	Improperly set	Personnel or design error	Inspection	Random
Mist Eliminator (Vapor Extractor) Fan and Motor	Flooded housing	Improper operation	Inspection, operational parameters	Random
Mist Eliminator (Vapor Extractor) Fan and Motor	Flooded housing	Plugged drain line	Inspection, operational parameters	Unconditional wear, 10–20 yrs.
Mist Eliminator (Vapor Extractor) Fan and Motor	Motor winding failure	Age	Inspection, operational parameters	Unconditional wear, 10–20 yrs.
Mist Eliminator (Vapor Extractor) Fan and Motor	Shaft seal failure	Degraded or insufficient lubrication	Inspection, operational parameters	Random
Mist Eliminator (Vapor Extractor) Fan and Motor	Shaft seal failure	Normal wear	Inspection, operational parameters	Unconditional wear, 6–10 yrs.

Table 6-4 (continued)
Lubrication supply component information from the Preventive Maintenance Basis Database

Failure Location	Degradation Mechanism	Degradation Influence	Discovery Method	Frequency of Discovery Method
Mist Eliminator (Vapor Extractor) Fan and Motor	Fan failure	Cracks, buildup on blades	Inspection, operational parameters	Unconditional wear, 15–30 yrs.
Mist Eliminator (Vapor Extractor) Fan and Motor	Blower housing leakage	Corrosion	Inspection, operational parameters	Unconditional wear, 20–40 yrs.
Mist Eliminator (Vapor Extractor) Fan and Motor	Blower housing leakage	Improper assembly	Inspection, operational parameters	Random
Valves – Manual (Lube oil drain, bleed, block, isolation, priming, and vent)	Stem separation	Normal use	Inspection	Unconditional wear, 10–15 yrs.
Tank Oil Level Indicator	Failed level switch	Stuck	Inspection	Random
Tank Oil Level Indicator	Improper indication	Stuck indicators	Inspection	Random
Three-way Transfer Valve – Duplex Type	Seat wear leading to leak by	Normal use	Inspection	Unconditional wear, 10–15 yrs.
Three-way Transfer Valve – Duplex Type	External leakage	Normal use	Inspection	Unconditional wear, 5–7 yrs.
Three-way Transfer Valve – Duplex Type	Binding, galling	Normal use	Inspection	Unconditional wear, 8–12 yrs.
Lube Oil	Loss of lubricity and additive package	Age, normal use	Oil Analysis	Unconditional wear, 10 yrs.
Lube Oil	Contamination from rust, scale, water	Seal or cooler leak	Oil Analysis	Random
Lube Oil	Contamination from wear particles	Turbine bearing and pump components	Oil Analysis	Random
Lube Oil	Bacterial contamination	Moisture	Oil Analysis	Random

Table 6-4 (continued)
Lubrication supply component information from the Preventive Maintenance Basis Database

Failure Location	Degradation Mechanism	Degradation Influence	Discovery Method	Frequency of Discovery Method
Lube Oil	Contamination – e.g., foreign material, improper storage or handling	Personnel or procedural error	Oil Analysis	Random
Lube Oil	Incorrect oil	Personnel error, incorrect specification, incorrect packaging	Oil Analysis	Random
Lube Oil	Low oil level	System leakage	Inspection	Random
Valves – Manual (Lube oil drain, bleed, block, isolation, priming, and vent)	Leaking internal or external	Age	Inspection	Unconditional wear, 10–20 yrs.
Lube Oil	Loss of lubricity and additive package	Overheating from improper cooling, or locally from bearing overheating	Oil Analysis, bearing temperature monitoring	Random
Tank	Rusted (internal)	Disbonded coating (aggravated by high water content of the oil)	Inspection	Random
Tank	Rusted (external)	Environment, exposure to the elements and large temperature swings	Inspection	Random
Tank	Rusted (internal)	Aging of coating	Inspection	Unconditional wear, 10 yrs.
Tank	Sludging	Build-up from degraded oil	Inspection	Wear, 3 yrs.
Tank Fill Access Hatch	Deteriorated gasket	Age, may be sooner in outside units	Inspection	Unconditional wear, 10 yrs.
Tank Fill Access Hatch	Failed gasket	Installation error	Inspection	Random

Table 6-4 (continued)
Lubrication supply component information from the Preventive Maintenance Basis Database

Failure Location	Degradation Mechanism	Degradation Influence	Discovery Method	Frequency of Discovery Method
Tank Strainer, if present	Fatigue failure	Age	Inspection	Unconditional wear, 10 yrs.
Tank Strainer, if present	Plugged	Debris	Inspection	Random
Valves – Manual (Lube oil drain, bleed, block, isolation, priming, and vent)	Bound stem, stuck	Lack of use	Inspection	Unconditional wear, 10–20 yrs.
Mist Eliminator (Vapor Extractor) Discharge Check Valve	Mis-positioned	Installation or operational error	Inspection, loss of tank negative pressure	Random
Mist Eliminator (Vapor Extractor) Discharge Check Valve	Weak or broken spring	Age, normal use	Inspection, loss of tank negative pressure	Unconditional wear, 20 yrs.
Mist Eliminator (Vapor Extractor) Fan and Motor	Motor bearing failure	Lack of lubrication, contamination	Inspection, audible noise	Wear, 1–3 yrs.
Mist Eliminator (Vapor Extractor) Fan and Motor	Motor bearing failure	Age	Inspection, audible noise	Unconditional wear, 8–12 yrs.
Piping and Tubing	Blockage	Sludge build-up from dirty oil	Inspection	Random
Piping and Tubing – Flex Hose	Blockage	Sludge build-up from dirty oil	Inspection	Random
Piping and Tubing – Flex Hose	Leakage	Age	Inspection	Unconditional wear, 10 yrs.
Piping and Tubing – Flex Hose	Damaged	Personnel error	Inspection	Random
Piping and Tubing	Damage	Personnel error	Inspection	Random

Table 6-4 (continued)
Lubrication supply component information from the Preventive Maintenance Basis Database

Failure Location	Degradation Mechanism	Degradation Influence	Discovery Method	Frequency of Discovery Method
Piping and Tubing – Heat Tracing, if present	Damaged, crushed, or cut wiring	Personnel error	Inspection, electrical circuit test	Random
Piping and Tubing – Heat Tracing, if present	Failed open or shorted circuit	Age	Inspection, electrical circuit test	Unconditional wear, 10–12 yrs.
Piping and Tubing – Heat Tracing, if present	Damaged or missing insulation	Personnel error	Inspection,	Random
Piping and Tubing – Heat Tracing, if present	Control instrument drift or inoperability	Age	Inspection, calibration	Unconditional wear, 2 yrs.
Filter – Duplex Type	Blocked	Normal use	Differential pressure	Unconditional wear, 6 yrs.
Filter – Duplex Type	Leakage	Failed tube fittings or elastomers	Inspection	Unconditional wear, 6–10 yrs.
Filter – Duplex Type	Loss of integrity	Normal use	Inspection	Unconditional wear, 5–6 yrs.
Tank Ground (Earth) Connection	Missing or broken	Personnel error	Inspection	Random
Piping and Tubing – Orifice	Blockage	Sludge build-up from dirty oil	Inspection, Low lube oil header pressure	Random
Piping and Tubing – Orifice	Erosion	Normal wear	Inspection, Excessive lube oil header pressure or pressure control valve position out of normal range	Unconditional wear, 20 yrs.
Tank Ground (Earth) Connection	Poor connection	Broken wire or bond	Inspection, electrical test	Random

Table 6-4 (continued)
Lubrication supply component information from the Preventive Maintenance Basis Database

Failure Location	Degradation Mechanism	Degradation Influence	Discovery Method	Frequency of Discovery Method
Indication and Alarm for Temperature, Pressure, Flow, and Level	Incorrect indication	Drift	Inspection, system monitoring, calibration	Unconditional wear, 4–6 yrs.
Indication and Alarm for Temperature, Pressure, Flow, and Level	Leaking sensors	Elastomer aging	Inspection, system monitoring, calibration	Unconditional wear, 5–10 yrs.
Indication and Alarm for Temperature, Pressure, Flow, and Level	Loose, leaking sensors	Vibration, improper installation	Inspection	Random
Indication and Alarm for Temperature, Pressure, Flow, and Level	Loss of indication	Damaged or failed detector, damaged wire, grounded, loose connection	Inspection, system monitoring, calibration	Random
Pressure Switch	Electrical switch – button sticking	Normal wear	Calibration, inspection, system monitoring	Unconditional wear, 12–15 yrs.
Tank	Failed or leaking blow-out panels	Elastomer aging	Inspection	Unconditional wear, 20 yrs.
Pressure Switch	Electrical switch – loose connections	Personnel error	Calibration, inspection, system monitoring	Random
Pressure Regulator	Loose, leaking flanged connections	Personnel error	Inspection, Audible noise	Random
Pressure Switch	Sensing line and tube fittings – broken or cracked line, or loose fitting	Vibration	System alarm, inspection	Wear, 3–6 yrs.
Discharge Check Valves – Lube Oil Pumps	Flange gasket leakage	Installation error	Inspection	Random

Table 6-4 (continued)
Lubrication supply component information from the Preventive Maintenance Basis Database

Failure Location	Degradation Mechanism	Degradation Influence	Discovery Method	Frequency of Discovery Method
Piping Bolted Flanged Joints	Leakage	Improper assembly	Inspection	Random
Pressure Switch	Elastomers, gaskets, and O-rings – material degradation	Misapplication, material selection	Inspection, system monitoring, calibration	Random
Pressure Switch	Elastomers, gaskets, and O-rings – material degradation	High temperature	Inspection, system monitoring, calibration	Wear, 5–10 yrs.
Mist Eliminator (Vapor Extractor) Manual Discharge Valve	Mis-positioned	Installation or operational error	Inspection, fan vibration	Random
Lube Oil	Contamination from varnish	Normal use	Oil Analysis	Unconditional wear, 1 yr.
Pressure Switch	Electrical switch – cracked and/or corroded	Vibration	Calibration, inspection, system monitoring	Wear, 8–10 yrs.
Pressure Switch	Sensing device – set point drift	Change in adjustment setting due to vibration	Calibration, system alarm	Random

Table 6-5
Emergency oil pump and DC motor information from the Preventive Maintenance Basis Database

Failure Location	Degradation Mechanism	Degradation Influence	Discovery Method	Frequency of Discovery Method
DC Motor – Bearing Seal	Wear	Imbalance or misalignment	Inspection	Random
Pressure Transmitter – Electronics	Component Failure	Age, temperature	Channel check, inspection, system alarm, calibration	Unconditional wear, 10–15 yrs.
Pressure Transmitter – Electronics	Toggle or Selector switch failure	Age, temperature	Channel check, inspection, system alarm, calibration	Random
DC Motor – Rotor – Commutator	Insulation degradation	Centrifugal forces, duty cycle	Commutator resistance checks, inspection	Unconditional wear, 3–5 yrs.
Pressure Transmitter – Electronics	Misadjustment	Personnel error	Channel check, inspection, system alarm, calibration	Random
DC Motor – Brushes	Wear	Personnel error (wrong length, position, type, polarity, spring tension)	Inspection	Random
Pump – Bearing – Thrust (grease lubricated)	Wear	Age, normal wear	Pump bearing temperature, vibration	Unconditional wear, 10–20 yrs.
Pump – Shaft Sleeve	Wear	Misalignment	Inspection, vibration	Random
DC Motor – Bearings: Rolling element	Wear	Degraded grease – contamination, temperature, the greater the ΔT, the shorter the life	Inspection, vibration	Wear, 2 yrs.
DC Motor – Shaft	Wear – Bearing fit and coupling areas	Corrosion	Vibration, inspection, alignment	Wear, 4–8 yrs.
DC Motor – Bearing Seal	Wear	Excessive grease	Inspection	Wear, 6 months
DC Motor – Space Heaters	Open element	Age	Inspection, electrical tests	Unconditional wear, 10–20 yrs.
DC Motor – Bearings: Rolling element	Wear	Insufficient grease	Inspection, vibration	Random

Table 6-5 (continued)
Emergency oil pump and DC motor information from the Preventive Maintenance Basis Database

Failure Location	Degradation Mechanism	Degradation Influence	Discovery Method	Frequency of Discovery Method
DC Motor – Armature	Loose pole pieces and banding	Temperature	Vibration, mechanical noise, inspection	Unconditional wear, 15–30 yrs.
Pressure Gauge	Failed diaphragm or Bourdon tube	Mis-operation, fatigue	Inspection, system monitoring, calibration	Random
DC Motor – Bearings: Rolling element	Wear	Excessive grease	Inspection, vibration	Wear, 4 months–1 yr.
DC Motor – Armature	Corrosion	Environment	Inspection	Unconditional wear, 5–15 yrs.
Pressure Transmitter – Electronics	Improper fuse installed	Personnel error	Channel check, inspection, system alarm, calibration	Random
DC Motor – Armature – Windings	Insulation degradation	Manufacturing design/deficiency	Inspection, insulation tests, motor analysis	Random
DC Motor – Leads and Electrical Connections	Insulation degradation	Age	Insulation tests, inspection	Unconditional wear, 40 yrs.
DC Motor – Stator – Windings	Insulation degradation	Vibration	Insulation tests	Wear, 6 yrs.
Pressure Transmitter – Electronics	Shorted to ground	Vibration, temperature, age	Channel check, inspection, system alarm, calibration	Unconditional wear, 5–10 yrs.
DC Motor – Brush Rigging	Loose or misadjusted	Personnel error	Inspection, operation, brush maintenance	Random
DC Motor – Leads and Electrical Connections	High resistance	Start/stop cycling	Inspection, thermography, winding resistance	Unconditional wear, 10–15 yrs.
Pump – Bearing – Thrust (grease lubricated)	Wear	Degraded lubricant from age, contamination or water ingress, temperature	Pump bearing temperature, vibration	Wear, 2 yrs.

Table 6-5 (continued)
Emergency oil pump and DC motor information from the Preventive Maintenance Basis Database

Failure Location	Degradation Mechanism	Degradation Influence	Discovery Method	Frequency of Discovery Method
DC Motor – Rotor – Commutator	Wear	Brush sticking	Vibration, erratic operation, inspection	Random
DC Motor – Leads and Electrical Connections	High resistance	Contamination	Inspection, thermography, winding resistance	Unconditional wear, 6–12 yrs.
DC Motor – Bearing Seal	Wear	Improper installation	Inspection	Random
DC Motor – Bearing Seal	Wear	Incorrect grease	Inspection	Random
DC Motor – Gaskets	Material degradation	Age	Inspection	Unconditional wear, 6–12 yrs.
DC Motor – Stator – Windings	Insulation degradation	Improper installation techniques, manufacturing defect	Insulation tests, inspection	Random
Pump – Bearing – Thrust (grease lubricated)	Wear	Insufficient or excessive lubricant	Pump bearing temperature, vibration	Random
DC Motor – Space Heaters	Broken, loose, grounded connections	Personnel error	Inspection, electrical tests	Wear, 10–20 yrs.
Pressure Gauge	Incorrect or loss of indication	Improper in-service initiation (over pressurization causing shock)	Inspection, system monitoring, calibration	Random
Pump – Bearing – Thrust (grease lubricated)	Wear	Incorrect lubricant	Pump bearing temperature, vibration	Random
DC Motor – Leads and Electrical Connections	High resistance	Improper installation	Inspection, thermography, winding resistance	Random
DC Motor – Armature	Fretting	Vibration	Vibration, inspection	Random
Pump – Bearing – Thrust (grease lubricated)	Wear	Excessive mechanical or hydraulic loading	Pump bearing temperature, vibration	Random

Table 6-5 (continued)
Emergency oil pump and DC motor information from the Preventive Maintenance Basis Database

Failure Location	Degradation Mechanism	Degradation Influence	Discovery Method	Frequency of Discovery Method
Pump – Bearing – Thrust (oil lubricated)	Wear	Incorrect lubricant	Pump bearing temperature, vibration	Random
Pump – Bearing – Thrust (oil lubricated)	Wear	Excessive mechanical or hydraulic loading	Pump bearing temperature, vibration	Random
Pump – Bearing – Thrust (oil lubricated)	Wear	Insufficient lubricant	Pump bearing temperature, vibration	Random
Pump – Bearing – Thrust (oil lubricated)	Wear	Maintenance induced errors from improper fit, handling, installation, or wrong bearing	Pump bearing temperature, vibration	Random
Pump – Bearing Retainers	Corrosion	Improper material	Inspection, vibration	Random
Pump – Bearing Retainers	Cracked	Improper bearing or retainer installation	Inspection, vibration	Random
Pump – Bearing Retainers	Cracked	Manufacturing defect	Inspection, vibration	Random
Pump – Bearings – Sleeve	Wear	Contaminated oil	Vibration, increased motor current	Random
Pump – Bearings – Sleeve	Wear	Maintenance induced errors from improper fit, handling, or installation	Vibration	Random
Pump – Discharge Head	Damage from cavitation or recirculation	Improper NPSHA, low intake oil level, or Off-BEP operation	Vibration, audible noise, inspection, performance test	Random
Pump – Discharge Head	Damage from cavitation or recirculation	Air entrapment	Vibration, audible noise, inspection, performance test	Random
Pump – Column Piping	Loose bolting	Installation error	Inspection	Random

Table 6-5 (continued)
Emergency oil pump and DC motor information from the Preventive Maintenance Basis Database

Failure Location	Degradation Mechanism	Degradation Influence	Discovery Method	Frequency of Discovery Method
Pump – Motor Mount	Corrosion	Improper maintenance or installation (loose motor mounting bolts, damaged flange)	Inspection, vibration	Random
Pump – Motor Mount	Cracked welds	Installation and removal stresses	Inspection, vibration	Random
Pump – Motor Mount	Cracked welds	Manufacturing defect	Inspection, vibration	Random
Pump – Motor Mount	Deformation	Installation and removal stresses	Inspection	Random
Pump – Gaskets	Leakage	Contaminated surface	Inspection, performance test	Random
Pump – Gaskets	Leakage	Improper fit	Inspection, performance test	Random
Pump – Gaskets	Leakage	Improper torque	Inspection, performance test	Random
Pump – Gaskets	Leakage	Poor surface condition, warped	Inspection, performance test	Random
Pump – Impeller	Loose or failed impeller key or locking collar	Excessive fit tolerances	Performance test, vibration	Random
Pump – Impeller	Loose or failed impeller key or locking collar	Improper material	Performance test, vibration	Random
Pump – Impeller	Loose or failed impeller key or locking collar	Installation error	Performance test, vibration	Random
Pump – Impeller	Physical damage	Debris	Hand rotation of the pump, vibration, inspection	Random
Pump – Impeller	Wear	Improper vertical setting	Performance test, inspection, vibration	Random

Table 6-5 (continued)
Emergency oil pump and DC motor information from the Preventive Maintenance Basis Database

Failure Location	Degradation Mechanism	Degradation Influence	Discovery Method	Frequency of Discovery Method
Pump – Impeller	Wear	Loose coupling	Inspection, vibration, audible noise, pump lift check	Random
Pump – Impeller	Wear	Improper operation (Low NPSHA, e.g., low intake oil level or off-BEP operation)	Performance test, inspection, vibration	Random
Pump – Mechanical Seal	Leakage	Excessive axial shaft movement	Inspection	Random
Pump – Mechanical Seal	Leakage	Improper installation (misalignment of shaft, shaft sleeve runout)	Inspection	Random
Pump – Mechanical Seal	Leakage	Vibration	Inspection, monitor seal leakoff	Random
Pump – Motor Coupling	Imbalance or misalignment	Improper installation (e.g., improper key size, mismatched coupling halves or bolts)	Vibration	Random
Pump – Shaft	Bent	Improper installation	Inspection, vibration	Random
Pump – Shaft	Bent	Misalignment from rubbing at bearing, seal, impeller, or wear rings	Inspection, vibration	Random
Pump – Shaft	Cracked	Manufacturing defect	Vibration, impact testing (ringing), inspection	Random
Pump – Shaft	Cracked	Shaft whip, running at > 10% off-BEP	Vibration, impact testing (ringing), inspection	Random
Pump – Shaft	Loss of shaft diameter due to contact wear from shaft sleeve	Loose or failed fastener	Inspection, Vibration	Random

Table 6-5 (continued)
Emergency oil pump and DC motor information from the Preventive Maintenance Basis Database

Failure Location	Degradation Mechanism	Degradation Influence	Discovery Method	Frequency of Discovery Method
Pump – Suction Screen	Clogged	Debris	Performance test, inspection, vibration	Random
Pump – Wear rings	Wear	Improper installation (e.g., improper fits, clearances, and tolerances, improper lift setting, misalignment)	Vibration, performance test, hand rotation, inspection	Random
Pump – Wear rings	Wear	Material selection	Vibration, performance test, hand rotation, inspection	Random
Pump – Bearing Oil Supply Line, if present	Failed	Vibration	Inspection, performance test	Random
Pump – Bearing – Thrust (oil lubricated)	Wear	Age, normal wear	Pump bearing temperature, vibration	Unconditional wear, 10–20 yrs.
Pump – Gaskets	Leakage	Age	Inspection, performance test	Unconditional wear, 10–20 yrs.
Pump – Mechanical Seal	Leakage	Normal wear	Inspection, monitor seal leakoff	Unconditional wear, 10–20 yrs.
Pump – Motor Mount	Corrosion	Environment	Inspection, vibration	Unconditional wear, 20 yrs.
Pump – Shaft	Loss of shaft diameter	Wear from bearings	Inspection, vibration	Unconditional wear, 20–40 yrs.
Pump – Shaft	Loss of shaft diameter	Wear from shaft seal	Inspection, vibration	Unconditional wear, 20–40 yrs.
Pump – Motor Coupling	Wear	Normal use	Vibration	Unconditional wear, 40 yrs.
Pump – Bearings – Sleeve	Wear	Age, normal wear	Vibration	Unconditional wear, 40 yrs.

Table 6-5 (continued)
Emergency oil pump and DC motor information from the Preventive Maintenance Basis Database

Failure Location	Degradation Mechanism	Degradation Influence	Discovery Method	Frequency of Discovery Method
Pump – Motor Mount	Cracked welds	Excessive vibration	Inspection, vibration	Wear, 10 yrs.
Pump – Motor Mount	Loose fasteners	Excessive vibration	Inspection, vibration	Wear, 10 yrs.
Pump – Bearing – Thrust (oil lubricated)	Wear	Degraded lubricant from age, contamination or water ingress, temperature	Pump bearing temperature, vibration	Wear, 5–10 yrs.
Pump – Gaskets	Leakage	Wrong material	Inspection, performance test	Wear, 5–10 yrs.
Pressure Switch – Elastomers, gaskets, and O-rings	Material degradation	Age	Inspection, system monitoring, calibration	Unconditional wear, 10 yrs.
Pressure Switch – Elastomers, gaskets, and O-rings	Material degradation	High temperature	Inspection, system monitoring, calibration	Wear, 5–10 yrs.
Pressure Switch – Elastomers, gaskets, and O-rings	Material degradation	Misapplication, material selection	Inspection, system monitoring, calibration	Random
Pressure Switch – Electrical switch	Button sticking	Normal wear	Calibration, inspection, system monitoring	Unconditional wear, 12–15 yrs.
Pressure Switch – Electrical switch	Cracked and/or corroded	Vibration	Calibration, inspection, system monitoring	Wear, 8–10 yrs.
Pressure Switch – Electrical switch	Loose connections	Personnel error	Calibration, inspection, system monitoring	Random
Pressure Switch – Electrical switch	Loose connections	Vibration	Calibration, inspection, system owner walkdown, and performance monitoring	Random
Pressure Switch – Sensing device	Set point drift	Change in adjustment setting due to vibration	Calibration, system alarm	Random

Table 6-5 (continued)
Emergency oil pump and DC motor information from the Preventive Maintenance Basis Database

Failure Location	Degradation Mechanism	Degradation Influence	Discovery Method	Frequency of Discovery Method
Pressure Switch – Sensing device	Set point drift	Leakage due to vibration	Calibration, system alarm	Wear, 5 yrs.
Pressure Switch – Sensing device	Set point drift	Material degradation due to age, normal wear	Calibration, system alarm	Unconditional wear, 5–10 yrs.
Pressure Switch – Sensing device	Set point drift	Material degradation due to high temperature	Calibration, system alarm	Wear, 5 yrs.
Pressure Switch – Sensing line and tube fittings	Broken or cracked line, or loose fitting	Personnel error (climbing or stepping on the line)	System alarm, inspection	Random
Pressure Switch – Sensing line and tube fittings	Broken or cracked line, or loose fitting	Vibration	System alarm, inspection	Wear, 3–6 yrs.
Pressure Switch – Sensing line and tube fittings	Fitting leak	Maintenance induced (connect/reconnect)	System alarm, inspection	Unconditional wear, 10 yrs.
Instrumentation – Indication and Alarm with separate sensors, if present	Incorrect or loss of indication	Drift	Inspection, system monitoring, calibration	Unconditional wear, 4–6 yrs.
Instrumentation – Indication and Alarm with separate sensors, if present	Leaking sensors	Elastomer aging	Inspection, system monitoring, calibration	Unconditional wear, 5–10 yrs.
Instrumentation – Indication and Alarm with separate sensors, if present	Loose, leaking sensors	Vibration, improper installation	Inspection	Random

Table 6-5 (continued)
Emergency oil pump and DC motor information from the Preventive Maintenance Basis Database

Failure Location	Degradation Mechanism	Degradation Influence	Discovery Method	Frequency of Discovery Method
Instrumentation – Indication and Alarm with separate sensors, if present	Loss of indication	Damaged or failed detector, damaged wire, grounded, loose connection	Inspection, system monitoring, calibration	Random
DC Motor – Bearings: Rolling element	Wear	Misalignment – Personnel error and wear of other components	Vibration	Wear, 3–6 months
DC Motor – Rotor – Commutator	Wear	Normal wear	Vibration, erratic operation, inspection	Unconditional wear, 10–15 yrs.
DC Motor – Leads and Electrical Connections	Insulation degradation	Improper testing	Insulation tests, inspection	Random
DC Motor – Rotor – Commutator	Loose on shaft and loose segments	Vibration	Vibration, erratic operation, inspection	Wear, 10–30 yrs.
Pressure Transmitter – Electronics	Drift	Age, temperature	Channel check, inspection, system alarm, calibration	Unconditional wear, 5 yrs.
DC Motor – Armature – Windings	Insulation degradation	Contamination	Inspection, insulation tests, motor analysis	Unconditional wear, 10–20 yrs.
DC Motor – Bearings: Rolling element	Wear	Normal wear	Vibration	Unconditional wear, 10–15 yrs.
DC Motor – Armature	Loose pole pieces and banding	Overspeed	Vibration, erratic operation, inspection	Random
DC Motor – Armature	Brazed joint failure	Cycle fatigue	Vibration, inspection	Unconditional wear, 15–30 yrs.
DC Motor – Shaft	Wear – Bearing fit and coupling areas	Degraded grease from contamination	Vibration, inspection, alignment	Unconditional wear, 10–15 yrs.
DC Motor – Armature – Windings	Insulation degradation	Vibration	Inspection, insulation tests, motor analysis	Wear, 6 yrs.

Table 6-5 (continued)
Emergency oil pump and DC motor information from the Preventive Maintenance Basis Database

Failure Location	Degradation Mechanism	Degradation Influence	Discovery Method	Frequency of Discovery Method
DC Motor – Rotor – Commutator	Wear	Improper brushes	Vibration, erratic operation, inspection	Random
DC Motor – Rotor – Commutator	Insulation degradation	Improper assembly	Commutator resistance checks, inspection	Random
DC Motor – Frame and Enclosure	Cracking	Structural resonance	Inspection, vibration	Random
Pressure Transmitter – Electronics	Component Failure	Vibration	Channel check, inspection, system alarm, calibration	Random
DC Motor – Bearing Seal	Wear	Environment, debris	Inspection	Random
DC Motor – Armature – Windings	Insulation degradation	Low battery voltage – high current	Insulation tests, motor analysis	Unconditional wear, 40 yrs.
Pressure Gauge	Incorrect or loss of indication	Drift	Inspection, system monitoring, calibration	Unconditional wear, 4–6 yrs.
DC Motor – Shaft	Wear – Bearing fit and coupling areas	Low duty cycle	Vibration, inspection, alignment	Unconditional wear, 10–15 yrs.
DC Motor – Rotor – Commutator	Corrosion	Environment	Inspection	Wear, 5–15 yrs.
DC Motor – Stator – Windings	Insulation degradation	Age, duty cycle	Insulation tests	Unconditional wear, 40 yrs.
DC Motor – Gaskets	Installation error	Personnel error	Inspection	Random
DC Motor – Machine Fits	Damaged or misaligned	Personnel error	Inspection	Random
DC Motor – Armature	Mechanical interference between armature and stator	Wear of other components	Vibration, mechanical noise, inspection, alignment check	Random
DC Motor – Leads and Electrical Connections	Insulation degradation	Temperature	Insulation tests, inspection	Wear, 6–12 yrs.

Table 6-5 (continued)
Emergency oil pump and DC motor information from the Preventive Maintenance Basis Database

Failure Location	Degradation Mechanism	Degradation Influence	Discovery Method	Frequency of Discovery Method
DC Motor – Frame and Enclosure	Cracking	Impact damage	Inspection, vibration	Random
DC Motor – External Cooling Fan and Cover	Blade buildup	Dirt and debris	Vibration	Unconditional wear, 10 yrs.
DC Motor – Brush Rigging	Weak spring or clip	Normal use	Inspection, operation	Unconditional wear, 20 yrs.
DC Motor – Bearings: Rolling element	Wear	Incorrect or mixed grease	Inspection, vibration	Random
DC Motor – Bearings: Rolling element	Wear	Maintenance induced errors from improper fit, handling and installation	Vibration	Random
DC Motor – Bearing Seal	Wear	Very low duty cycle	Inspection	Unconditional wear, 5–10 yrs.
DC Motor – Stator – Windings	Insulation degradation	Contamination	Insulation tests, inspection	Random
Pressure Transmitter – Electronics	Loose card in socket, or loose fuse in fuse holder	Vibration, temperature, age	Channel check, inspection, system alarm, calibration	Unconditional wear, 5–10 yrs.
Pressure Transmitter – Electronics	Toggle or Selector switch contacts high resistance	Infrequent cycling of switch	Channel check, inspection, system alarm, calibration	Unconditional wear, 5–10 yrs.
Pump – Bearing – Thrust (grease lubricated)	Wear	Maintenance induced errors from improper fit, handling, installation, or wrong bearing	Pump bearing temperature, vibration	Random
DC Motor – Rotor – Commutator	Loose on shaft and loose segments	Improper assembly	Vibration, erratic operation, inspection	Random
DC Motor – Brushes	Wear	Normal wear	Inspection	Unconditional wear, 20–40 yrs.

Table 6-5 (continued)
Emergency oil pump and DC motor information from the Preventive Maintenance Basis Database

Failure Location	Degradation Mechanism	Degradation Influence	Discovery Method	Frequency of Discovery Method
DC Motor – Brushes	Wear	Commutator surface and raised mica	Inspection	Wear, 1–2 yrs.
DC Motor – Armature – Windings	Insulation degradation	Heat above rated	Insulation tests, Motor Analysis	Wear, 6–12 yrs.
DC Motor – Armature	Brazed joint failure	Manufacturing design/ deficiency	Vibration, inspection	Random
DC Motor – Rotor – Commutator	Loose on shaft and loose segments	Centrifugal forces, duty cycle	Vibration, erratic operation, inspection	Unconditional wear, 15–30 yrs.
DC Motor – Rotor – Commutator	Wear	Incorrect brush setup	Vibration, erratic operation, inspection	Random
DC Motor – External Cooling Fan and Cover	Loose	Installation error	Vibration, abnormal noise	Random
DC Motor – Leads and Electrical Connections	Insulation degradation	Contamination especially water	Insulation tests, inspection	Wear, 6–12 yrs.
DC Motor – Rotor – Commutator	Insulation degradation	Vibration	Commutator resistance checks, inspection	Wear, 40 yrs.
DC Motor – Leads and Electrical Connections	Insulation degradation	Manufacturing defect, damage	Insulation tests, inspection	Random
DC Motor – Space Heaters	Broken, loose, grounded connections	Vibration	Inspection, electrical tests	Wear, 10–20 yrs.
DC Motor – Rotor – Commutator	Wear	Environment	Vibration, erratic operation, inspection	Wear, 1–3 yrs.
DC Motor – Bearing Seal	Wear	Material defect	Inspection	Random
DC Motor – Bearings: Rolling element	Wear	Excessive mechanical loading	Vibration	Random

6.2 PM Tasks and Objectives

The description and frequency of the PM tasks for the combustion turbine lubrication system in the EPRI Preventive Maintenance Basis Database are as follows:

- ***Calibration*** – Perform every 2 years. The PM task *Calibration* assures that the device is performing within specification, and confirms traceability to NIST (National Institute of Standards and Technology) standards in demonstrating the absolute accuracy of the output. The PM task *Calibration* should include the following actions:
  - A visual inspection or walkdown, as far as practical, of the instrument's sensing line looking for evidence of air leaks; damaged, crushed, or broken tubing; loose tubing connections; loose or missing tubing clamps or corroded tubing and connectors; overheated components; and cracked terminations and cases.
  - Channel check provides an opportunity to make a gross comparison between like instruments monitoring the same process condition, and assures that the output of the device is correct and typically within a few percent of the medium channel or has not drifted significantly from previously noted values.
  - Verify and adjust, as needed, the device's zero span.
  - Verify and adjust, as needed, the device's linearity and hysteresis.
- ***DC Motor Brush Maintenance*** – Perform every 6 months. The objective of *DC Motor Brush Maintenance* is to ensure that the DC motor is capable of operating when required by replacing motor brushes that are known to be high-wear items.
- ***Functional Test*** – Perform every year. The objective of the PM task *Functional Test* is to verify the automatic start features and confirm that the equipment has not failed since its last usage. The actions for the oil pumps are the following:
  1. Prior to testing for the DC rundown and DC cooldown pumps, verify that the 110-VDC supply is available and capable of supplying the correct power.
  2. Bypass the low lube oil pressure switch to initiate a pump start signal.
  3. Listen for unusual noises, which might indicate bearing problems or a loose motor cooling fan, if present.
  4. Visually verify that the motor space heater turns off. The light on the connection box should go out when the motor starts.
  5. Visually inspect the motor, the coupling, and pump for damage, loose bolting, and missing guards.
  6. Verify that the pump starts and reaches full speed.

7. Verify that the discharge pressure of the pump is in the normal range and appears to be steady. Trend this parameter.
8. Visually determine that the pump seal is not leaking.
9. Restore the pump to normal operation.

The objective of the PM task *Function Test* for the lube oil tank heaters is to assure the heater's availability to properly warm the turbine lube oil. The warming of the turbine oil assures the proper lubrication of the turbine and generator bearings, and their seals during start-up conditions, especially in the colder months of the year.

The actions for the lube oil tank heaters are the following:

- Open and inspect the heater electrical connections and leads for deterioration and evidence of localized heating.
- It is strongly suggested that the heaters and their wiring be electrically tested to verify continuity and that there are no grounds present. Verify the amperage draw is within normal limits to assure that the heater elements are operating properly. Inspect the heater controller for visual evidence of over-heating, burnt contacts, and deteriorated or corroded wiring and terminations.
- Visually verify that the heater local indicator lamp (if present) is operating properly.

- ***Operator Rounds*** – The PM task *Operator Rounds* is a predictive maintenance task that takes place once per shift and is focused on verifying that all system operating parameters are within specifications, that there are no obvious leaks, that the filters are in good condition, and that the fluid is in good condition. It should include inspection for leaks; unusual noises; loose, damaged, or missing fasteners; unusual vibrations; and verification that all system operating parameters and levels are within their desired ranges.

  Perform each shift. The PM task *Operator Rounds* focuses on identification of system and equipment problems early and involves all five senses of the operator. This PM includes visible indications of grease leakage from bearings, leaking pump seals, and the general condition of the motors and pumps. The actions for the PM task *Operator Rounds* are as follows:

  - Visually inspect for oil and water leaks.
  - Visual inspect for evidence of loose, damaged, or missing fasteners; abnormal pressures, temperatures, or flow rates; or alarms.
  - Verify status of all system alarms.
  - Note indications of erratic operation and unusual noises.
  - Verify proper operational status of the tank oil heater.

- Verify that the oil level in the tank is within normal parameters and does not appear to be milky, which would indicate a presence of water.
- Verify that the oil filters are not clogged and bypassing and that the differential pressures are within specified limits of operation. Swap the filters if required to do so.

The actions for the PM task *Operator Rounds* for all electric motors are as follows:

- Inspect for general cleanliness.
- Inspect for blocked inlet air screens.
- Inspect for loose, damaged, or missing parts and bolts.
- Inspect for damaged conduit or seal flex.
- Inspect for loose/damaged ground wires.
- Inspect for damaged junction boxes and gaskets.
- Inspect for excessive grease.
- Listen for unusual noises or vibrations, if running.
- Verify the status of motor heaters, if possible.

- ***Performance Monitoring*** – Perform as required. The objective of the PM task *Performance Monitoring* is to identify degradation of equipment by evaluating and trending instrument readings and measure and trend efficiency parameters that could detect fouling, leaks, plugging, and other issues that could threaten performance or capacity.
- ***Pump and Motor Lubrication*** – Perform every 2 years. The objective of the PM task *Pump and Motor Lubrication* is to prevent bearing failure from hardened and degraded grease and to perform a visual inspection for obvious damage and pump seal leakage.
- ***Pump Overhaul*** – Perform 8–12 years. The objective of the PM task *Pump Overhaul* is to restore each pump to as-new condition through replacement with a new or reconditioned pump. The actions for a pump overhaul are as follows:

  1. Prior to removal and disassembly, check and record the uncoupled pump lift and motor thrust. Compare these readings to previous readings.
  2. Document as-found / as-left dimensions on machine fits, clearances, and motor and pump lifts.
  3. Inspect and document conditions, including the presence of corrosion or erosion of welds, column piping, protective coatings, the suction strainer, and hardware such as bolts, fasteners, and gaskets.
  4. In general, replace all components beyond manufacturer tolerances and specifications. Document wear and condition.

5. Inspect for damage, wear, and deterioration of all gaskets, O-rings, and elastomers.
6. Replace all gaskets, O-rings, and elastomers.
7. Replace anti-friction bearings. Inspect and document wear and condition.
8. Inspect pump casing and cover assemblies for thinning, cracking, erosion, and erosion / corrosion.
9. Inspect the pump casing vent for damage and pluggage. Clean as necessary.
10. Inspect shaft for damage, defects, and runout.
11. Inspect impeller and wear rings for wear, damage, and galling. Balance if required.
12. Inspect the seal stuffing box for damage, corrosion, and wear.
13. Replace seal, if present.
14. Clean and check for fit and flatness of all mating surfaces and joints.
15. Verify fit and tolerances of the motor support stand.
16. Inspect motor support stand for corrosion, cracked welds, and deformation.
17. Inspect for the general cleanliness and condition of all components.
18. Inspect for loose, missing, or damaged bolts and parts.
19. Inspect for abnormal noises and vibration, oil leaks, piping and flange leaks, damaged or missing insulation, abnormal pipe movement and damaged or misadjusted pipe hangers, and the general condition of expansion bellows.
20. Inspect pump mounting plate for damage and for missing or loose bolting.
21. Verify the presence and condition of the coupling guard.
22. Verify the proper operation and oil level of the oiler, if present.
23. Verify that the equipment is tagged and properly identified.
24. After reinstallation and prior to coupling, check and record the uncoupled pump lift and motor thrust. Compare these readings to historical data.
25. Verify proper motor rotation before coupling.
26. Perform any post-maintenance testing of the coupled motor and pump.
27. Note and report any seal leakage.

28. Perform diagnostics on old seal, such as determining the amount of seal face wear for wear rate evaluation, condition of elastomers, presence of any debris, condition of the spring, and the extent of the setscrew indentations into the shaft sleeve.
29. Check seal injection piping condition and verify flow.
30. Inspect the shaft and shaft sleeve for defects or damage.
31. Verify shaft runout.
32. Look for loose, missing, or damaged bolts, studs, nuts, and parts.
33. Replace with new correct seal.
34. Verify that the gland bolts are not loose or damaged.
35. Verify the proper seal injection flow.

- ***Motor Overhaul*** – Perform every 8–12 years. The objective of the PM task *Motor Overhaul* focuses only on the removal and reinstallation portions of a complete overhaul or refurbishment. However, the task content does include a minimal outline of what should be accomplished to recondition the motor. While this text applies to DC motors, except in specific instances it may also be applied to AC motors. Most motors of this class, unless they are critical or specialized, are good candidates to be replaced. This decision is left to each individual to decide whether the economic advantage is to replace or rebuild. Two forms of Replace-Rebuild are possible. The first option is a simple replacement with a rebuilt or new motor, which for small motors is probably the best course of action. The second option is to complete rebuild including an inspection of the removed motor.

  Motor replacement using a rebuilt or new motor includes the following actions:

  1. Obtain all necessary clearances.
  2. Uncouple the motor and the driven equipment.
  3. Remove the motor and replace with new or rebuilt unit.
  4. Test the motor for proper rotation, making sure the brushes are properly seated and free to move.
  5. Install the coupling, making sure to properly lubricate the coupling.
  6. Align the motor and driven equipment.
  7. Perform post-maintenance testing on the motor and driven equipment.
  8. Remove all tags and return to service.

Rebuilding the in-place motor or replaced motor includes the following actions:

1. Obtain all necessary clearances.
2. Uncouple the motor and the driven equipment.
3. Remove the motor.
4. Disassemble, taking note of the condition of the motor leads and windings.
5. Inspect the brushes and brush rigging for damage, loose or stuck brushes, and weak springs and clips.
6. Inspect the armature commutator for damage, uneven bars, high mica, and evidence of excessive sparking.
7. Turn the armature commutator to true round, undercut between each bar, and trim all high mica.
8. Spark the commutator, looking for shorted bars, and repair as necessary.
9. Test the armature winds for open or shorted windings and degraded insulation.
10. Inspect the armature for damaged insulation and loose pole pieces. Repair as necessary.
11. Inspect the armature leads for damage and degraded insulation.
12. Perform resistance testing on the stator leads and windings, making sure they meet minimal requirements (usually around 100 mega-ohms to ground and phase-to-phase). If less than 100 mega-ohms, the company policy may require the rewind or replacement of the motor.
13. Remove the bearing and inspect the shaft and endbells for wear and damage. Repair as necessary.
14. If no bearing damage is discovered, replace the bearing with new bearings of the exact same size and type.
15. Clean all endbell and stator surfaces using approved methods and solvents. If the windings are washed, be sure to dry them using approved methods until a satisfactory resistance reading is obtained.
16. Reinstall the brush rigging, making sure to replace all weak springs and clips. Be sure to test the rigging insulation, if present.
17. Reinstall all new brushes.
18. Inspect the stator and mounting flange for damage and warpage.
19. Reassemble the motor, replacing all shaft grease seals, O-rings, and gaskets.
20. Energize and test-run the motor, making sure to properly reseat the brushes, if possible.
21. Re-install the motor.

22. Test the motor for proper rotation and reseat brushes, if this was not done previously.
23. Install the coupling, making sure to properly lubricate the coupling.
24. Align the motor and driven equipment.
25. Perform any post-maintenance testing on the motor and driven equipment.
26. Remove all tags and return to service.

- ***System Owner Walkdown*** – The PM task *System Owner Walkdown* provides a high-level oversight of general system health and well-being, with the capability to search for leakage, improper system operation, and other faults that might not be readily observable during operator rounds. A System Owner Walkdown usually also involves a review of operating data for trends and a review of work orders and diagnostic reports. The above considerations lead to a preference for monthly or quarterly system owner walkdowns.

  Perform monthly. The PM task *System Owner Walkdown* focuses mainly on visible indications of grease leakage from bearings, leaking pump seals, and the general condition of the motors and pumps. The PM task *System Owner Walkdown* should contain the following actions:

  - Visually inspect for oil and water leaks.
  - Visual inspect for evidence of loose, damaged, or missing fasteners; abnormal pressures, temperatures, or flow rates; or alarms.
  - Verify the status of all system alarms.
  - Note indications of erratic operation and unusual noises.
  - Verify proper operational status of the oil tank heater.
  - Verify that the oil level in the tank is within normal parameters and does not appear to be milky. A milky condition would indicate a presence of water.
  - Verify that the oil filters are not clogged and bypassing, and that the differential pressures are within specified limits of operation.
  - Visually inspect the tank for damage and evidence of external rust and corrosion.

  For all electric motors, the PM task *System Owner Walkdown* should contain the following actions:

  - Inspect for general cleanliness.
  - Inspect for blocked inlet air screens.
  - Inspect for loose, damaged, or missing parts and bolts.
  - Inspect for damaged conduit or seal flex.
  - Inspect for loose/damaged ground wires.

- Inspect for damaged junction boxes and gaskets.
- Inspect for excessive grease.
- Listen for unusual noises or vibrations, if running.
- Verify the status of motor heaters, if possible.

- ***Vibration Analysis*** – Perform every 3 months. The PM task *Vibration Analysis* ensures lube oil pump reliability and operability by detecting wear in bearings and other rotating components before failure occurs. *Vibration Analysis* should contain the following actions:
  - Data acquisition, data evaluation, and trending of all vibration sensors over the entire frequency spectrum, if possible.
  - Data acquisition should include accelerometers and phase angle data.
  - Evaluate for specific abnormal condition, such as misalignment, mass imbalance, and line frequency response.
  - Phase angle should be included for the first- and second-order harmonics.
  - For bearings being analyzed, bearing temperatures are recorded.
  - All data is trended.
- ***AC Pump and Motor Lubrication*** – Perform every 2 years. The objective of the PM task *AC Pump and Motor Lubrication* is to prevent bearing failure from hardened and degraded grease and to perform a visual inspection for obvious damage and pump seal leakage. The PM task *AC Pump and Motor Lubrication* should contain the following actions:
  - Using the recommended and approved grease, lubricate the upper and lower motor bearings.
  - Inspect the motor coupling for evidence of abnormal wear or loose bolting, and verify that the coupling guard, if present, is in place.
  - Inspect for general cleanliness.
  - Inspect for loose, damaged, or missing parts and bolts.
  - Inspect for damaged conduit or seal flex.
  - Inspect for loose or damaged ground wires.
  - Inspect for damaged junction boxes and gaskets.
  - Inspect for excessive grease.
  - Listen for unusual noises or vibrations.
  - Verify the status of motor heaters, if present.
  - Verify that the pump seal shows no evidence of leakage.

- ***DC Motor Brush Maintenance*** – Perform every 6 months. The objective of the PM task *DC Motor Brush Maintenance* is to ensure that the DC motor is capable of operating when required by replacing motor brushes that are known to be high-wear items.
- ***Lube Oil Heat Exchanger – Plate and Frame – Disassemble and Clean*** – Perform as required. The objective of the PM task *Lube Oil Heat Exchanger – Plate and Frame – Disassemble and Clean* is to restore the heat exchanger to original performance levels. If the heat exchanger is designed with bolted plenum cover, it can be used for internal cleaning of the inlet plenum. This interim measure may extend the period between the full disassembly and cleaning.
- ***Lube Oil Heat Exchanger – Plate and Frame – In-Situ Cleaning*** – Perform as required. The objective of the PM task *Lube Oil Heat Exchanger – Plate and Frame – In-Situ Cleaning* is to clean the major passages between the plates when indicated by performance monitoring.
- ***Lube Oil Heat Exchanger – Plate and Frame – Plate Refurbishment or Replacement –*** Perform as required. The objective of the PM task *Lube Oil Heat Exchanger – Plate and Frame – Plate Refurbishment or Replacement* is to restore the heat exchanger to an as-new condition, through either replacement or complete reconditioning.
- ***Mist Eliminator and Demister Inspection*** – Perform every 2–3 years. The objective of the PM task *Mist Eliminator and Demister Inspection* is to maintain the condition of the oil by reducing the amount of hydrogen, water, air, dust, and other airborne contaminants. The inspection should include the following actions:
  - Lubricate all bearings, and the shaft seal, if possible.
  - Listen for noisy bearings and verify that the motor is running.
  - Visually inspect the shaft seal for failure and degraded conditions.
  - Listen for audible indications of problems with the impeller/fan, such as cracked blades and imbalance caused by buildup of dirt on blades.
- ***Oil Analysis*** – Perform every 3 months. The objective of the PM task Oil Analysis is to ensure that the lubricating oil remains clean and its lubricity is kept within normal specifications. The PM task *Oil Analysis* should include the following actions:
  1. Find information on additional tests and their expected limits. Resources that are available include ASTM, EPRI, and manufacturer documents and related references.
  2. Take samples from both the main lube oil tank and after the filter.
  3. Test each sample for the following minimal characteristics: water; metal, such as babbitt; and physical properties, such as lubricity, including additive packages.
  4. Refer to manufacturer documents for limits and additional tests.
  5. Trend all results.

The following is a partial list of tests that may be performed:

- Wear Particle Analysis
- Wear Metals and Organo-Metallic Additives
- Rotating Pressure Vessel Oxidation Test ASTM D2272
- Turbine Oil Oxidation Stability Test ASTM D943
- Remaining Useful Life Evaluation Routine ASTM D6971
- Determination of the Sludging and Corrosion Tendencies ASTM D4310
- Antioxidant Levels by Fourier Transform Infrared Analysis
- Foaming Characteristics ASTM D892
- Air Release Characteristics (Gas Bubble Separation) ASTM D3427
- Emulsion Characteristics ASTM D1401

- ***Strainer Cleaning*** – Perform every 3–6 months. The objectives of the PM task *Strainer Cleaning* are to remove large debris from the turbine lube and seal oil system, to ensure that the strainers have not become plugged (thus restricting oil flow), and to verify the integrity of the wire mesh of the baskets themselves. The PM task *Strainer Cleaning* should include the following actions:

  1. Remove any large debris trapped by the strainer baskets.
  2. Visually inspect the baskets for evidence of plugging, which might indicate problems with oil or the oil system.
  3. Visually inspect the baskets for damage to the wire mesh to verify integrity of the strainer itself. The strainer basket may be cleaned or replaced as indicated by this inspection.
  4. Reinstall the basket.
  5. Inspect the cover gasket for damage of deterioration and evidence of leakage. Replace the gasket as necessary or as required by plant procedures.

6.3 PM Task Summary

Table 6-6 lists the PM tasks and their frequency for the combustion turbine lubrication system. The information is from the Preventive Maintenance Basis Database (EPRI product 1018758).

Table 6-6
PM tasks and corresponding frequencies

PM Task	Frequency of PM Task
Calibration	2 years
Functional Test	1 year
Operator Rounds	Once per shift
Performance Monitoring	As required
Pump Overhaul	8–12 years
Motor Overhaul	8–12 years
System Owner Walkdown	Monthly
Vibration Analysis	3 months
Pump and Motor Lubrication	2 years
DC Motor Brush Maintenance	6 months
Lube Oil Heat Exchanger – Plate and Frame – Disassemble and Clean	As required
Lube Oil Heat Exchanger – Plate and Frame – In-Situ Cleaning	As required
Lube Oil Heat Exchanger – Plate and Frame – Plate Refurbishment or Replacement	As required
Mist Eliminator and Demister Inspection	2–3 years
Oil Analysis	3 months
Strainer Cleaning	3–6 months

Section 7: Component Maintenance

This section addresses components of the combustion turbine lubrication system and the corresponding recommended corrective maintenance. Adding to the recommendations contained in Section 5 of this report, "Preventive Maintenance," this section covers repairs and replacement topics.

The information in this section was taken from EPRI report 1010191, *Turbine-Generator Auxiliary Systems, Volume 1: Turbine-Generator Lubrication System Maintenance Guide*, and EPRI product 1018758, *Preventive Maintenance Basis Database*.

1. Oil tank

Any damage to the screens/strainers should be weld repaired or the screens/strainers replaced. The screens may require replacement in 10 years from fatigue damage. The oil tank could require replacement in 10 years from internal coating degradation and in 3 years from oil sludge chemical attack.

2. Immersion heaters

Depending on the heater physical condition and the results of the electrical testing, the heaters should be considered for replacement in 20 years of service.

3. Vapor extractor/mist eliminator

The vapor extractor fan and motor unit are typically replaced and not rebuilt on site. It is recommended that a spare fan/blower assembly and motor be available should a failure occur. The typical life of the fan/blower assembly is 6–20 years, and the typical life of the motor is 10–20 years.

4. Bearing oil pumps

See Section 5, "Preventive Maintenance," in this report for recommendations on overhauling the pump every 8–12 years.

5. Bearing oil pump motors

See Section 5, "Preventive Maintenance," in this report for recommendations on overhaul/replacement of the motor every 8–12 years.

6. Emergency bearing oil pump

See Section 5, "Preventive Maintenance," in this report for recommendations on overhauling the pump every 8–12 years.

7. Emergency bearing oil pump motor

See Section 5, "Preventive Maintenance," in this report for recommendations on overhaul/replacement of the motor every 8–12 years.

8. Seal oil pump

See Section 5, "Preventive Maintenance," in this report for recommendations on overhauling the pump every 8–12 years.

9. Seal oil pump AC motor

See Section 5, "Preventive Maintenance," in this report for recommendations on overhaul/replacement of the motor every 8–12 years.

10. Seal oil pump DC motor

See Section 5, "Preventive Maintenance," in this report for recommendations on overhaul/replacement of the motor every 8–12 years.

11. Oil coolers

The topics of cleaning and inspection of the oil coolers are covered in Section 5, "Preventive Maintenance," in this report. The topics of tube plugging and chemical cleaning for the tube-and-shell style heat exchanger and some general comments for the plate and frame style heat exchanger are covered in this section.

Tube plugging may become necessary due to leaks, tube thinning, or complete flow blockage (which sometimes leads to future tube leak areas). The maximum number of tubes that can be plugged is determined by considering the minimum level of heat removal required for a given set of service conditions and the percentage of spare tubes included in the original design. It is recommended to consult the cooler manufacturer's literature to determine the maximum number of tubes that can be plugged before the heat transfer capability is affected. It is also recommended to keep a current map of the tubesheet showing the open and plugged tubes. Most heat exchanger tubes are designed and supplied using standard available condenser tube sizes and material.

The following tasks should be performed when plugging a tube in the oil cooler:

1. Secure and isolate the oil cooler.
2. Drain the water from the tube side.
3. Remove the stationary-end water box cover.
4. Remove the floating-end water box cover (for once-through design coolers).

5. Identify which tube(s) require plugging. This can be accomplished using a variety of methods—the smoke method, eddy current testing, ultrasonic testing, and so on.
6. Plug tube(s) from both ends using an acceptable style plug and installation tools. Taper plugs of a compatible material can be considered suitable for a temporary repair. Temporary plugs should be replaced by permanent plugs or tube replacement at the next available opportunity.
7. Retest the tubesheet to ensure that all leaking tubes are identified and plugged.
8. Replace the floating-end water box cover (for once-through design coolers).
9. Replace the stationary-end water box cover.
10. Remove equipment tagging and return the cooler to service or standby mode.

Several forms of chemical cleaning are available, depending on a specific cleaning objective (for example, removal of specific deposits or scale). Specialty companies that provide this type of chemical cleaning service are available. Acids are most often used as the cleaning agent. The following acids have been used as cleaning agents:

- Hydrochloric acid
- Sulfamic acid
- Sulfuric acid
- Phosphoric acid
- Citric acid

Citric acid tends to be preferred, especially wherever austenitic stainless steel, copper, or copper alloy materials are involved. Acid cleaning is followed by a neutralization (for example, potash solution) and passivation process that is designed to produce a thin, protective layer of magnetite (in the case of iron-based materials) on the clean metal surfaces.

Neutralization solutions and related flush and rinse wastewater often contain elevated levels of metals from the cleaning process and should be collected and disposed of in accordance with applicable federal, state, and local requirements.

Performing a chemical cleaning includes the following tasks:

1. Determine whether permits are required. Follow the permit requirements for set-up and disposal of the chemicals.
2. Set up and appropriately contain cleaning solution tanks and equipment.
3. Secure and isolate the oil cooler. In many cases, effective isolation from the rest of the cooling system may require the installation of blanks, blinds, sealing plugs, or bladders.

4. Restrict general access to the area where the cleaning activity will be performed, as recommended by the chemical supplier and cleaning procedures.
5. Set up general area monitoring (for example, for gas release) as appropriate.
6. Drain the water from the tube side.
7. Remove the stationary-end water box cover.
8. Remove the floating-end water box cover (for once-through design coolers).
9. Perform and closely monitor cleaning operations.
10. Once the desired cleaning results are achieved, perform neutralizing operations, collecting related solutions (often in tanks or tank farms) as required.
11. Remove any blanks, blinds, sealing plugs, bladders, or other temporary system alterations.
12. Refill the cooler.
13. Replace the floating-end water box cover (for once-through design coolers).
14. Replace the stationary-end water box cover.
15. Remove equipment tagging and return the cooler to service or standby mode.

All precautions for the handling, use, and disposal of chemical agents used in cleaning the oil coolers should be followed. The Material Safety Data Sheets (MSDS) for the chemicals used should be reviewed. Depending on the chemical agent used, federal, state, or local permits may be required.

For the plate and frame style oil cooler, the tasks for opening, cleaning, and closing of the plate-and-frame heat exchanger are listed in Section 5.1, "Component Preventive and Predictive Maintenance Tasks," in this report. In addition, there are problems and corrections listed for this style heat exchanger.

The following information was taken from Section 6, "Preventive Maintenance Basis Database," in this report: The PM task *Lube Oil Heat Exchanger – Plate and Frame – Plate Refurbishment or Replacement* should be performed as required. The objective of this task is to restore the heat exchanger to an as-new condition, through either replacement or complete reconditioning.

12. Oil filters

Routine filter replacements in the preventive maintenance program provide the major maintenance required for the filter elements. If there is an unexpected high differential pressure due to filter plugging, then a determination of the cause of the plugging is warranted. If the cause of the plugging is corrosion products, sludge, or microbiological growth, then the filter plugging issue will continue until the causes are resolved.

If the filter is damaged, some of the potential causes are:

- High filter differential pressure
- Poor filter element quality
- Filter seal failure
- Improper seal seating in the housing
- Incorrect filter

13. Instrumentation

Instrumentation is not typically considered for overhaul or replacement unless the instrument is determined to be an inappropriate application, defective, or obsolete. Most normal instrument maintenance is identified in Section 5, "Preventive Maintenance," Section 6, "Preventive Maintenance Basis Database," and Section 8, "Troubleshooting," in this report.

14. Valves

For the three-way transfer valves, the valves may need replacement in 5–7 years due to leakage, 8–12 years due to binding, and 10–15 years due to wear. The manual drain, bleed, block, isolation, priming, and vent valves may need replacement in 10–15 years due to stem separation and in 10–20 years due to leakage. The check valves may need replacement in 20–40 years due to unconditional wear.

When it is necessary to repair or replace the valves in the lubrication system, the following considerations should be given:

- Consult the valve manufacturer's recommendations for specific areas to inspect.
- Evaluate the cause of any wear, damage, or abnormal conditions found.
- Verify the class of service (for example, pressure, temperature, and process fluid).
- Verify the body and trim material requirements.
- Verify the operator compatibility with existing power and controls.
- Inspect the required end connections (for example, flanges and butt-welds).
- Follow the proper assembly and installation recommendations.
- Ensure adequate tightening of fasteners.
- Perform the packing adjustments, as necessary.
- Apply the stem lubrication, as applicable.

15. Hydraulic system equipment

If the pressure compensator or the pump is not functioning correctly, these components should be replaced. Repair or rebuild of these components is not recommended.

GE recommends replacing the bladder in the accumulator every 4 years.

16. Generator hydrogen detraining equipment

See the manufacturer's literature on any recommended replacement equipment.

17. Piping

The following conditions should be evaluated for repair/replacement in the piping system:

- Leaking or corroded piping and joints
- Sagging or misaligned piping
- Broken or missing supports or hangers

When it becomes necessary to replace sections of the oil piping, the following recommendations should be reviewed:

- Only use piping, fittings, flanges, and components that are materially compatible with the existing piping.
- Flange O-rings and gaskets should be in accordance with manufacturer or industry standard recommendations for lubricating oil system service.
- Ensure that the piping being installed is of the proper schedule and size.
- Verify that the proper weld materials and procedures are being used.
- The piping to component nozzle loads (forces and moments on the piping connection) should be minimized by careful attention during alignment and tightening. If a chain fall or come-along must be used to align the piping to component nozzles, residual stress and potential component misalignments may occur.
- To dislodge internal piping deposits, including weld joint slag deposits, the piping can be rapped with manufacturer/site-approved non-sparking hammers (manual or air) using precautions to avoid mechanical damage to the piping system.

Section 8: Troubleshooting

Information for this section was taken from EPRI report 1010191, *Turbine-Generator Auxiliary Systems, Volume 1: Turbine-Generator Lubrication System Maintenance Guide*.

Troubleshooting is a logical, systematic process for solving system/equipment malfunctions. Troubleshooting includes data collection, failure analysis, corrective action, testing the system/equipment, and restoration of the system/equipment to normal operation. The following are the basic steps for the troubleshooting process:

1. Identify the system/equipment problem.
2. Determine the cause of the system/equipment problem.
3. Implement corrective action(s) to include short-term and long-term solutions.
4. Verify that the system/equipment problem has been corrected. If not, go back to step 2.
5. Return the system/equipment to normal operation.

Table 8-1 lists the lubrication system components, symptoms, causes, and corrective actions. The information is taken from EPRI report 1010191, *Turbine-Generator Auxiliary Systems, Volume 1: Turbine-Generator Lubrication System Maintenance Guide.*

Table 8-1
Troubleshooting for the combustion turbine lubrication system

Component	Symptom	Cause	Corrective Action
Turbine-generator bearings	Oil whirl – high vibration at a frequency less than rotor speed	Increase in oil viscosity, decrease in oil temperature, increase in oil pressure	Increase bearing oil temperature, Check oil viscosity, Verify that pump discharge pressures are in the normal range.
Turbine-generator bearings	Oil whip – high vibration not related to rotor speed	Inadequate oil flow, excessive or reduced bearing clearance	Verify bearing header pressure, Verify oil drain flow from bearing, Check oil drain temperature. If necessary, disassemble bearing to check clearances.
Generator bearings	Oil leakage from bearing	Vapor extractor system not functioning, blocked vent/drain in hydrogen detraining system, blockage in bearing drain line	Verify vapor extractor operating at a slight negative pressure (for example, -0.5 to -1.5 in. water gauge), Check hydrogen system vents/drains, Verify temperature and flow in bearing drain line.
Bearing orifice strainers	Decreased or blocked flow of oil to bearing, Increased temperature of bearing drain oil	Blocked bearing strainer/orifice, Temporary fine-mesh strainers not removed after an oil flush	Inspect bearing strainer/orifice for blockage, Remove fine-mesh screens after oil flush.
Oil cooler	Oil temperature too high	Air or vapor binding due to inadequate venting, Water side fouling, Water side blockage, Inadequate oil flow, Temperature Control Valve not functioning correctly	Verify cooler is venting, Inspect tube/tubesheet or plate for cleanliness, Verify water flow through cooler, Verify oil flow through cooler. Inspect settings and function of Temperature Control Valve.
Oil cooler	Oil temperature too low	Temperature Control Valve malfunctioning	Verify operation and settings of Temperature Control Valve.
Oil cooler	Water in oil	Leaking tubes in tube and shell oil cooler	Switch to standby cooler, Perform shell-side pressure test to identify leaking tube, Plug or replace leaking tube, Perform water-side hydrostatic test.

Table 8-1 (continued)
Troubleshooting for the combustion turbine lubrication system

Component	Symptom	Cause	Corrective Action
Bearing header	Low oil pressure	A relief or pressure control valve stuck in open position, A check valve on a standby pump stuck in open position, A check valve on the operating pump stuck and restricting flow, A valve disk separated from stem	Check function and condition of relief valves, pressure control valves, and pump discharge check valves.
Hydrogen detraining tank/drain trap	Generator bearing oil leaks	Blocked screens or drain flow paths, Restricted or blocked detraining tank or drain trap vent system	Verify bearing drain flow, Check for obstruction in the detraining tank/drain trap. (Line blockage can sometimes be detected by thermography, since the line downstream of the blockage will tend to be cooler.)
Hydraulic pump noise	Air in the inlet line	Cavitation caused by cold oil, clogged suction screen, low oil level, or leaking suction piping	Check oil temperature, suction screen for clogging, oil level, leaking suction piping.
Hydraulic pump pressure	Loss of pressure	Faulty pressure compensator, defective pump, excessive leakage, manual valves open	Verify faulty pressure compensator, inspect pump, check for leakage, and check manual valves. If compensator or pump is defective, replace these components.
Hydraulic pump pressure	Loss of pressure	Defective pump	Measure motor current to ensure less than full load current. Turn the compensator screw clockwise. If the pump pressure does not increase, replace the pump.
Instrumentation – Indicators	Suspect readings	Instrument not vented properly, Out-of-calibration, Not functioning, Functioning (reading is accurate)	Ventilation, Calibration, Replacement, or No action for instrumentation but further action to determine abnormal values.
Instrumentation – Switches	Abnormal readings	Instrument not vented properly, Out-of-calibration, Not functioning, Functioning (reading is accurate)	Ventilation, Calibration, Replacement, or No action for instrumentation but further action to determine abnormal values.

Table 8-1 (continued)
Troubleshooting for the combustion turbine lubrication system

Component	Symptom	Cause	Corrective Action
Instrumentation – Transmitters	Abnormal readings, alarms, and/or trip initiation	Inadequate venting on pressure transmitters, out-of-calibration, cable/connection flaws, end device not functioning	For pressure or pressure-sensing flow/level transmitters, ensure that the transmitter is adequately vented, Compare suspected transmitter calibration to a calibrated reference source, Check signal loops between transmitters and end-process devices, Check for possible cable or connection flaws (typically related to high resistance), Check the process control device (for example, controller, programmable logic controller, and distributed control system) for proper settings and functions.
Filter/Strainer	High differential pressure	Filter/Strainer is clogged	Swap to the standby filter/strainer, Remove filter/strainer from service and inspect, Replace filter element or clean strainers, Return filter/strainer to service.
Filter/Strainer	High contamination count	If no abnormal differential pressure, Ruptured filter elements, Ruptured strainer screen media, Clogged filter bypass relief valve	Swap to the standby filter/strainer, Remove filter/strainer from service and inspect, Replace filter element or clean strainers, Inspect filter bypass relief valve, Return filter/strainer to service.
Piping	Oil pressure to bearings decreased, Temperature of oil leaving bearing increased	Leak in supply oil piping	Inspect piping for external signs of distress (oil dripping from joints), Inspect supply piping thickness by ultrasonic testing, Replace any leaking piping.
Hydraulic pump discharge	Low oil pressure	Hydraulic pump not functioning, Pressure relief valve set too low	Switch to standby pump, Repair/replace defective pump, Reset/replace pressure relief valve.
Hydraulic filter	High differential pressure	Differential pressure switch setting incorrect, Differential pressure switch not functioning	Reset differential pressure switch, Repair/replace differential pressure switch.

Table 8-1 (continued)
Troubleshooting for the combustion turbine lubrication system

Component	Symptom	Cause	Corrective Action
Oil pumps	High vibration	Misalignment, Unbalance, Resonance, Cavitation, Recirculation, Flow turbulence	Vibration readings should be analyzed to determine the cause.
Oil pumps	Not pumping	Low oil tank level, Pump is not rotating in correct direction, Pump is not rotating at the normal operating speed, Pump casing inadequately vented, Clogged suction strainer, Discharge check valve open, Impeller separation from shaft	Check oil tank level. Check pump rotation direction, Check speed of pump, Check pump venting, Check suction strainer, Verify discharge check valve operation, Inspect impeller condition.
Oil pumps	Flow/pressure output inadequate	Low oil tank level, Failure of the pump's check valve to open fully, Standby pump check valve may be open, Pump not operating at normal speed, Pump casing not adequately vented, Clogged suction strainer, Excessive clearances in impeller to pump casing, Impeller shaft key sheared or impeller not adequately secured to shaft	Check oil tank level, Verify check valve opening fully, Verify standby pump check valves are closed, Check pump speed, Verify pump venting, Inspect suction strainer, Inspect pump to casing clearances, Inspect impeller.
Oil pumps	Excessive vibration	Low oil tank level, Pump casing is inadequately vented, Loose pump mounting, Misaligned or loose pump coupling, Excessive bearing wear, Pump rotating in wrong direction, Debris in suction screen or impeller, Bent pump shaft, Broken vanes or pump gears	Check oil tank level, Verify pump casing is vented, Inspect pump mounting hardware, Inspect pump coupling, Inspect bearings, Verify pump rotation is correct, Inspect suction screen and impeller for debris, Inspect pump shaft for straightness, Inspect vanes or pump gears.

Table 8-1 (continued)
Troubleshooting for the combustion turbine lubrication system

Component	Symptom	Cause	Corrective Action
Oil pump motors	High power input	Low header pressure, Oil temperature low, Physical binding in pump, Incorrect direction of rotation	Check oil header pressure, Check oil temperature, Inspect pump for binding, Verify pump and motor rotation is correct direction.
Oil pump motors	Failure to start	Instruments, valves, switches, and controls may not be in the correct position, Switch or transmitter that starts the pump motor may not be functioning correctly, Breaker and breaker auxiliary relay functions may not be set correctly, Motor may not be functioning properly	Verify instrumentation and controls have correct position and readings, Check the switch or transmitter setting that starts the pump motor, Verify breaker and breaker auxiliary relays are functioning correctly, Perform motor tests to determine motor condition.
Oil tank level	Too high	Flow imbalance between pumps and return flow	Check return lines for proper flow, Switch to standby pump.
Oil tank level	Too low	Loss of oil	Check system for leaks.
Oil tank pressure	Negative pressure cannot be maintained	Oil tank doors are open, Vapor extractor is not functioning, Suction butterfly valve is not open enough, Fan/blower is not functioning, Blockage of drain line from water trap	Verify all tank and standard access doors are closed, Check for high system backpressure, possibly mist eliminator fouling, Confirm the suction butterfly valve is properly adjusted (that is, open enough), Check for fan/blower wear or damage, Check for blockage of drain from water trap if fitted in vent line (that is, excessive water in drain).
Oil tank pressure	Negative pressure is too high	Plugged intake vent openings and/or tank air intake filters, Improperly adjusted suction butterfly valve (that is, open too much)	Check intake vent openings/tank air intake filters, Adjust the vapor extractor suction butterfly valve.

Table 8-1 (continued)
Troubleshooting for the combustion turbine lubrication system

Component	Symptom	Cause	Corrective Action
Oil tank screens/strainers	Damaged	Drain flow turbulence in areas of return screens/strainers, Screen/strainer size too small, Screen/strainer material problems, Damaged screens/strainers	Check turbulence in area of screens/strainers, Verify screen/strainer size openings, material condition, and physical condition.
Oil tank temperature	Too high	Immersion heater malfunction, Insufficient flow in oil cooler, Insufficient heat transfer in oil cooler, Return oil hotter than normal	Inspect immersion heaters, Verify temperature switch settings, Check water flow in oil cooler, Inspect oil cooler for fouling, Verify temperature regulating valve settings, Check bearing discharge temperatures.
Vapor extractor	Oil leaks at the turbine bearings, oil tank pressure too high, oil tank leakage, system drain piping leakage	Improper setup, Failed fan/blower discharge check valve, Plugged demister or mist eliminator, Motor or fan/blower failure	Verify operation of vapor extractor, Switch to standby extractor if available, Clean demister, Repair/replace motor or fan/blower.
Vapor extractor fan/blower	High vibration or noise	Excessive wear of blower or motor bearings, Damaged impeller, Foreign material buildup (for example, sludge) causing impeller imbalance, Broken or loose bolts or screws	Switch to standby extractor if available, Check blower and motor bearings, Inspect impeller, Check for broken or loose bolts or screws.
Vapor extractor motor	Current overload	Mechanical binding (for example, shaft or impeller rubbing), Packing too tight causes binding, Butterfly valve open too much, General motor condition	Switch to standby extractor if available. Check for mechanical binding, packing condition, position of butterfly valve, and general motor condition.

Section 9: References

The following materials were used in the development of this report. Reference citations are given in the text of the report.

- *GE MS 7001FA+E Combined Cycle Training Program, Combustion Turbine Training Manual*, Chapter 10, "Oil System." EPRI, Palo Alto, CA.
- ASTM Standard D6439-11, *Guide for Cleaning, Flushing, and Purification of Steam, Gas, and Hydroelectric Turbine Lubrication Systems.*
- *Lube Oil Predictive Maintenance, Handling, and Quality Assurance Guideline*. EPRI, Palo Alto, CA: 2002. 1004384.
- General Electric Technical Information Letter 1528-3, *Lube Oil Varnishing*. November 18, 2005.
- GEK 32568E GE Power Systems, Gas Turbine, Revised May 1999, *Lubricating Oil Recommendations for Gas Turbines with Bearing Ambients Above 500˚F (260˚C)*.
- *Predictive Maintenance Guidelines for Combustion Turbine Fleets and Combined-Cycle Plants*. EPRI, Palo Alto, CA: 2002. 1004357.
- *Preventive Maintenance Basis Database*. EPRI, Palo Alto, CA: 2009. 1018758.
- ASTM Standard D4378-08, *Standard Practice for In-Service Monitoring of Mineral Turbine Oils for Steam and Gas Turbines*.
- *Turbine-Generator Auxiliary Systems, Volume 1: Turbine-Generator Lubrication System Maintenance Guide*. EPRI, Palo Alto, CA: 2005. 1010191.
- *Turbine Oil System Varnish*. Chevron, San Ramon, CA: 2005.

Export Control Restrictions

Access to and use of EPRI Intellectual Property is granted with the specific understanding and requirement that responsibility for ensuring full compliance with all applicable U.S. and foreign export laws and regulations is being undertaken by you and your company. This includes an obligation to ensure that any individual receiving access hereunder who is not a U.S. citizen or permanent U.S. resident is permitted access under applicable U.S. and foreign export laws and regulations. In the event you are uncertain whether you or your company may lawfully obtain access to this EPRI Intellectual Property, you acknowledge that it is your obligation to consult with your company's legal counsel to determine whether this access is lawful. Although EPRI may make available on a case-by-case basis an informal assessment of the applicable U.S. export classification for specific EPRI Intellectual Property, you and your company acknowledge that this assessment is solely for informational purposes and not for reliance purposes. You and your company acknowledge that it is still the obligation of you and your company to make your own assessment of the applicable U.S. export classification and ensure compliance accordingly. You and your company understand and acknowledge your obligations to make a prompt report to EPRI and the appropriate authorities regarding any access to or use of EPRI Intellectual Property hereunder that may be in violation of applicable U.S. or foreign export laws or regulations.

The Electric Power Research Institute, Inc. (EPRI, www.epri.com) conducts research and development relating to the generation, delivery and use of electricity for the benefit of the public. An independent, nonprofit organization, EPRI brings together its scientists and engineers as well as experts from academia and industry to help address challenges in electricity, including reliability, efficiency, health, safety and the environment. EPRI also provides technology, policy and economic analyses to drive long-range research and development planning, and supports research in emerging technologies. EPRI's members represent approximately 90 percent of the electricity generated and delivered in the United States, and international participation extends to more than 30 countries. EPRI's principal offices and laboratories are located in Palo Alto, Calif.; Charlotte, N.C.; Knoxville, Tenn.; and Lenox, Mass.

Together...Shaping the Future of Electricity

© 2012 Electric Power Research Institute (EPRI), Inc. All rights reserved. Electric Power Research Institute, EPRI, and TOGETHER...SHAPING THE FUTURE OF ELECTRICITY are registered service marks of the Electric Power Research Institute, Inc.

1026605

Electric Power Research Institute
3420 Hillview Avenue, Palo Alto, California 94304-1338 • PO Box 10412, Palo Alto, California 94303-0813 USA
800.313.3774 • 650.855.2121 • askepri@epri.com • www.epri.com