EPRI | ELECTRIC POWER RESEARCH INSTITUTE

Assessment of Asset Monitors to IEC 61850-90-3: Circuit Breakers

3002009872



Assessment of Asset Monitors to IEC 61850-90-3: Circuit Breakers

EPRI Project Managers
S. Sternfeld

ELECTRIC POWER RESEARCH INSTITUTE

3420 Hillview Avenue
Palo Alto, CA 94304-1338
USA

PO Box 10412
Palo Alto, CA 94303-0813
USA

800.313.3774
650.855.2121

askepri@epri.com

www.epri.com

3002009872
Technical Update, October 2017

DISCLAIMER OF WARRANTIES AND LIMITATION OF LIABILITIES

THIS DOCUMENT WAS PREPARED BY THE ORGANIZATION NAMED BELOW AS AN ACCOUNT OF WORK SPONSORED OR COSPONSORED BY THE ELECTRIC POWER RESEARCH INSTITUTE, INC. (EPRI). NEITHER EPRI, ANY MEMBER OF EPRI, ANY COSPONSOR, THE ORGANIZATION(S) BELOW, NOR ANY PERSON ACTING ON BEHALF OF ANY OF THEM:

(A) MAKES ANY WARRANTY OR REPRESENTATION WHATSOEVER, EXPRESS OR IMPLIED, (I) WITH RESPECT TO THE USE OF ANY INFORMATION, APPARATUS, METHOD, PROCESS, OR SIMILAR ITEM DISCLOSED IN THIS DOCUMENT, INCLUDING MERCHANTABILITY AND FITNESS FOR A PARTICULAR PURPOSE, OR (II) THAT SUCH USE DOES NOT INFRINGE ON OR INTERFERE WITH PRIVATELY OWNED RIGHTS, INCLUDING ANY PARTY'S INTELLECTUAL PROPERTY, OR (III) THAT THIS DOCUMENT IS SUITABLE TO ANY PARTICULAR USER'S CIRCUMSTANCE; OR

(B) ASSUMES RESPONSIBILITY FOR ANY DAMAGES OR OTHER LIABILITY WHATSOEVER (INCLUDING ANY CONSEQUENTIAL DAMAGES, EVEN IF EPRI OR ANY EPRI REPRESENTATIVE HAS BEEN ADVISED OF THE POSSIBILITY OF SUCH DAMAGES) RESULTING FROM YOUR SELECTION OR USE OF THIS DOCUMENT OR ANY INFORMATION, APPARATUS, METHOD, PROCESS, OR SIMILAR ITEM DISCLOSED IN THIS DOCUMENT.

REFERENCE HEREIN TO ANY SPECIFIC COMMERCIAL PRODUCT, PROCESS, OR SERVICE BY ITS TRADE NAME, TRADEMARK, MANUFACTURER, OR OTHERWISE, DOES NOT NECESSARILY CONSTITUTE OR IMPLY ITS ENDORSEMENT, RECOMMENDATION, OR FAVORING BY EPRI.

THE ELECTRIC POWER RESEARCH INSTITUTE (EPRI) PREPARED THIS REPORT.

This is an EPRI Technical Update report. A Technical Update report is intended as an informal report of continuing research, a meeting, or a topical study. It is not a final EPRI technical report.

NOTE

For further information about EPRI, call the EPRI Customer Assistance Center at 800.313.3774 or e-mail askepri@epri.com.

Electric Power Research Institute, EPRI, and TOGETHER…SHAPING THE FUTURE OF ELECTRICITY are registered service marks of the Electric Power Research Institute, Inc.

Copyright © 2017 Electric Power Research Institute, Inc. All rights reserved.

Acknowledgments

The Electric Power Research Institute (EPRI) prepared this report.

Principal Investigators
S. Sternfeld
P. Myrda

This report describes research sponsored by EPRI.

This publication is a corporate document that should be cited in the literature in the following manner:

Assessment of Asset Monitors to IEC 61850-90-3: Circuit Breakers. EPRI, Palo Alto, CA: 2017. 3002009872.

Abstract

High-voltage circuit breakers perform essential protection and control functions on power transmission networks. A breaker's failure to operate as required can result in equipment damage, increased system disturbance, and loss of load.

Utilities have been maintaining circuit breakers reliably for many years. However, the task has grown increasingly challenging due to several factors, including the aging breaker population, the loss of subject matter experts and experienced personnel who are familiar with breaker operation and maintenance, and a challenging business environment that requires utilities to "do more with less."

This report examines the data outputs for circuit breaker monitors and protective relays from several manufacturers. The recently finalized Part 90-3 of the International Electrotechnical Commission (IEC) 61850 standard—which is tailored to condition monitoring diagnosis and analysis—has created an opportunity for advancements in circuit breaker health monitoring.

The focus of this project was to determine the level of compliance from circuit breaker monitors relative to the final version of the IEC 61850-90-3 standard. Any gaps identified in the standard will be provided to IEC Technical Committee 57 Working Group 10 for future consideration.

By leveraging the existing object models—which are applicable to condition monitoring within the Common Information Model (CIM) and IEC 61850 standards—utility asset managers can build highly effective asset health programs that help manage financial risk while improving overall electric reliability.

Keywords
Asset management and health
Circuit breakers
Common Information Model (CIM)
Condition monitoring
IEC 61850-90-3 standard
Object models

Deliverable Number: 3002009872

Product Type: Technical Update

Product Title: Assessment of Asset Monitors to IEC 61850-90-3: Circuit Breakers

PRIMARY AUDIENCE: Asset management—circuit breakers

SECONDARY AUDIENCE: Enterprise data management

KEY RESEARCH QUESTION

One of the key benefits of the International Electrotechnical Commission (IEC) 61850 standard since its inception has been interoperability. The focus of this project was to determine the level of compliance from circuit breaker monitors and protective relays relative to the final version of the IEC 61850-90-3 standard. The Electric Power Research Institute (EPRI) assessed the interoperability of circuit breaker monitors using IEC 61850-90-3 and investigated recent advances in the application of the standard to circuit breaker monitors. Any gaps identified in the standard will be provided to IEC Technical Committee 57 Working Group 10 for future consideration.

RESEARCH OVERVIEW

This project examined the requirements for asset condition monitoring from the perspective of standards and communications, guided by a specific use case. A gap analysis was performed against the circuit breaker supervision (SCBR) data objects described in the final version of the IEC 61850-90-3 standard. Analysis was performed using three circuit breaker monitors and protective relays from three manufacturers. The analysis was specifically targeted toward circuit breaker monitors. Based on the analysis, observations were made regarding compliance, and several gaps were identified. For example, although there is a certain amount of consistency in the “core” objects, a group of objects in the standard were not implemented by any of the vendors. In addition, various vendors have created custom extensions for objects that do not currently exist in the standard. The overarching goal was to help establish economical and effective circuit breaker monitoring and diagnostic programs for critical and costly circuit breaker assets.

KEY FINDINGS

- This project examined the requirements for asset condition monitoring from the perspective of standards and communications, guided by a specific use case. With the rise in the use of asset management programs, including circuit breaker monitoring, costs can be controlled by leveraging standards to retrieve data from monitors produced by a variety of vendors.
- The Common Information Model (CIM) standard facilitates data exchange between applications within an organization—in this case, for condition monitoring of circuit breakers.
- IEC 61850 implementation information was acquired from the following vendor products:
  - GE CBWatch3
  - ABB SwitchSync PWC600
  - ABB Relion 650 Busbar Protection
  - SEL 400 series; SEL-351S, SEL-751
  - GE UR family relays

- Output parameters were acquired from the following vendor product information, which is not using IEC 61850: Qualitrol BCM-200E
- Gaps were identified between the current implementations and the final version of the IEC 61850-90-3 standard. Some custom extensions, for example, may become “optional” or “mandatory” objects in later versions of the standard. Plans for ultimately addressing such gaps include feedback to the standards bodies.

WHY THIS MATTERS

A key benefit of the IEC 61850-90-3 standard for utilities will be increased interoperability for multi-vendor condition monitoring devices. This feature helps utilities reduce costs through more effective data integration and greater flexibility in product selection. Moreover, by leveraging the existing object models—which are applicable to condition monitoring within the CIM and IEC 61850 standards—utility asset managers can build highly effective asset health programs that help manage financial risk while improving overall electric reliability. For utilities to realize these benefits, however, it is critical that manufacturers produce condition monitoring products that comply with the IEC standard.

HOW TO APPLY RESULTS

Vendor implementations will require a software or firmware update to bring current products into closer alignment with the objects currently identified in the IEC 61850-90-3 standard, thus reducing the overall use of extended objects.

LEARNING AND ENGAGEMENT OPPORTUNITIES

- Related EPRI work includes Enterprise Architecture (161E), IEC 61850 (161B and P37), and Transmission and Distribution Asset Management programs.

EPRI CONTACTS: Paul Myrda, Technical Executive, PMyrda@epri.com; Scott Sternfeld, Sr. Technical Leader, SSternfeld@epri.com

PROGRAM: Information and Communication Technology (ICT) for Transmission, P161B

Electric Power Research Institute
3420 Hillview Avenue, Palo Alto, California 94304-1338 • PO Box 10412, Palo Alto, California 94303-0813 USA
800.313.3774 • 650.855.2121 • askepri@epri.com • www.epri.com
© 2016 Electric Power Research Institute (EPRI), Inc. All rights reserved. Electric Power Research Institute, EPRI, and TOGETHER...SHAPING THE FUTURE OF ELECTRICITY are registered service marks of the Electric Power Research Institute, Inc.

Table of Contents

Abstract ..... **V**

Executive Summary ..... **VII**

Section 1: Introduction **1-1**

Section 2: Circuit breaker Condition Monitoring .. **2-1**

Fundamentals 2-1
Circuit Breaker Life Cycle 2-1
Circuit Breaker Diagnostic Testing 2-2
What Are the Timing Test's Objectives? 2-2
How is the Timing Test Performed? 2-2
What Does the Test Check/Test/Measure/Evaluate? 2-3
Using Relays for Breaker Diagnostics 2-4
Protection Relays Examined 2-5
ABB Relion REB650 Series 2-5
SEL-400 Series 2-6
GE UR Relay Family 2-9
Dedicated Circuit Breaker Monitors Examined 2-10
GE CBWatch3 2-10
ABB PWC 600 SwitchSync 2-14
Qualitrol BCM 200E 2-14

Section 3: Asset Data Models **3-1**

Data Models 3-1
Common Information Model (CIM) 3-1
CIM Modeling of Circuit Breakers 3-3
Impact of Circuit Breaker Configuration on Data Models 3-5
CIM Asset Health Data - Online Monitor Model 3-8
CIM - Switch Operations Summary 3-10
CIM - Asset Failure 3-11
Connecting Data Between Models 3-12

Section 4: IEC 61850 Condition Monitoring..... 4-1
Background..... 4-1
Condition Monitoring Use Caese Example..... 4-4
Abrasion Monitoring..... 4-4
State of the Standard: 2016..... 4-6
Benefit of the Standard 4-6
IEC 61850-90-3 Data Object Name Semantics and Enumerations..... 4-6
IEC 61850 Gas Insulated Switchgear (GIS)/Circuit Breaker Measurements 4-6
Circuit Breaker Modeling..... 4-7
Common Data Classes and Data Objects in SCBR Class..... 4-8

Section 5: Circuit Breaker Monitors 5-1
Marketplace Vendors Supporting IEC 61850..... 5-1
Marketplace Vendors not Currently Supporting IEC 61850..... 5-2
Conformance of Vendor Implementation to 61850-90-3 SCBR Class 5-3

Section 6: Next Steps 6-1
Interoperability Tests..... 6-1

Section 7: Conclusion..... 7-1

Section 8: References..... 8-1

List of Figures

Figure 2-1 Intelligent circuit breaker monitor 2-7
Figure 2-2 Sample SEL-411L breaker report 2-9
Figure 2-3 Operating time measurement 2-13
Figure 3-1 Class hierarchy for diagram shapes 3-3
Figure 3-2 Detail of classes utilized in common instance templates for breakers 3-4
Figure 3-3 Common instance template for SF6 dead tank breaker with 1 tank, 1 mechanism, single breaks 3-6
Figure 3-4 Common instance template for SF6 dead tank breaker with 3 tanks, 1 mechanism, single breaks 3-7
Figure 3-5 Common instance template for SF6 live tank breaker with 3 insulating stacks on one base, 1 mechanism, single breaks 3-7
Figure 3-6 CIM UML for online monitor description 3-8
Figure 3-7 Example of online monitor as measurement value source and asset..... 3-9
Figure 3-8 CIM UML for switch operations..... 3-10
Figure 3-9 CIM UML for asset failure 3-11
Figure 3-10 Conceptual System Architecture..... 3-12
Figure 3-11 Field to enterprise data linkages through three IEC standards 3-13
Figure 4-1 Early proposed logical node design for condition monitoring and diagnostics 4-2
Figure 4-2 Entity relationship diagram for abrasion monitoring..... 4-4
Figure 4-3 Example of 3 phase circuit breaker modelling 4-8
Figure 4-4 Example logical node diagram showing SCBR and related attributes..... 4-9

List of Tables

Table 2-1 Breaker Monitoring SSCBR for ABB REB650 Series 2-6

Table 3-1 Salient Characteristics for Each Transmission Breaker Family..... 3-5

Table 4-1 Example Functional Breakdown of Condition Monitoring Based on Auxiliary Power System Model..... 4-3

Table 4-2 Actor(s) for Abrasion Monitoring 4-5

Table 4-3 Three Use Cases for Abrasion Monitoring..... 4-5

Table 4-4 Use Case 1: Abrasion Calculation 4-5

Table 4-5 Use Case 2: Get Abrasion 4-5

Table 4-6 Use Case 3: Update Mechanical Behavior..... 4-6

Table 4-7 Useful IEC 61850 Logical Nodes for Circuit Breaker Health..... 4-7

Table 4-8 Common Class Types Found in SCBR Class 4-10

Table 4-9 SCBR Class Data Objects (Mandatory and Optional) 4-11

Table 5-1 IEC 61850-90-3 Objects Supported by Various Monitoring Platforms 5-3

Table 5-2 Data Objects for the Circuit Breaker Supervision(SCBR) Logical Node..... 5-5

Table 5-3 Alarms Listed in Log and Operate Breaker Condition Relay for the Qualitrol BCM-200E 5-11

Section 1: Introduction

High-voltage circuit breakers perform essential protection and control functions on power transmission networks. A breaker's failure to operate as required can result in equipment damage, increased system disturbance and loss of load.

Utilities have been maintaining circuit breakers reliably for many years. However, the task has grown increasingly challenging due to several factors, including the aging breaker population, the loss of subject matter expertise and experienced personnel familiar with breaker operation and maintenance; and a challenging business environment that demands utilities to "do more with less". [1]

Beginning in 2013, EPRI began developing a *Circuit Breaker Guidebook* to provide a comprehensive compendium of information for utility personnel—from subject matter experts to new hires—involved in circuit breaker inspection, lubrication, maintenance, and lifecycle management. The new guide is being developed to cover all aspects of circuit breaker ownership from a life management perspective and utilizes the latest analytical asset management techniques.

As utility financial pressures are applied, asset condition monitoring has grown in importance. The costs associated with catastrophic failure of a high voltage circuit breaker are large along with the environmental mitigation, grid impacts and other impacts. Thus, utilities have increased their use of circuit breaker monitors to defend against such failures by informing asset managers of potential problems.

Circuit breaker monitors have been available for years and many of them have developed their own protocols to transmit data from the monitor to the corporate office. This was usually to a circuit breaker subject matter expert. Today, these monitors may be part of a broader substation monitoring system that keeps watch on the entire primary system.

One of the key benefits of IEC 61850 promoted since its inception has been interoperability. The focus of this work was to see how well monitors from various manufacturers comply with the existing IEC 61850-90-3 standard and any pending updates.

This project assessed the interoperability of circuit breaker monitors and protective relays using IEC 61850-90-3 and investigated the recent advances in the use of the standard as applied to circuit breaker monitors. Any gaps identified in the standard will be provided to Technical Committee 57 Working Group 10 for future consideration.

The use case considered in this project was the replacement of one IEC 61850 circuit breaker monitor with another from a different manufacturer. This use case should identify differences between the manufacturers and any ambiguous section within the standard.

The following sections of the report address fundamentals of circuit breaker condition monitoring, the role of asset data models, IEC 61850-90-3 condition monitoring, assessment of available monitors and the modeling of asset health beyond IEC 61850.

Section 2: Circuit breaker Condition Monitoring

Fundamentals

Circuit breakers can be tested in a variety of ways, namely through detailed diagnostic testing, with measurements obtained by protective relays, or continuous monitoring by dedicated monitoring systems. This report compares the asset health related measurements from three dedicated monitoring systems and protective relays from three manufacturers.

While the focus of this report is the on-line monitoring systems, information on the detailed diagnostic testing process is provided below to give context to the health index derived from the monitors.

Circuit Breaker Life Cycle

The life cycle performance of a high voltage circuit breaker is, to a large degree, determined by the performance of the materials and components that make up the complete breaker. The rates of deterioration of components such as compressors, pumps, seals, linkages and their lubrication and interrupter elements drive the requirements for circuit breaker maintenance and refurbishment. Increased information about breaker component degradation will allow all utilities, regardless of their maintenance approaches, to develop better maintenance practices and programs.

The research from EPRI's high voltage circuit breaker life management program is focused on the interactions among component degradation and breaker operation, not component technologies. Because of their universal use and critical importance, investigation of the effects of component degradation on breaker operation has started with lubricants. Excessive degradation of lubricants, especially greases, can adversely affect breaker performance through increased maintenance costs, reduced availability, and slow or even complete failure to operate when required. [1]

Below are typical measured parameters that are reflective of the condition of the circuit breaker. Circuit breaker monitors may include some, or all of the following items:

- Circuit breaker wear
- Electrical operating time
- Mechanical operating time
- Circuit breaker inactivity time
- Interrupted current
- Pole scatter (for single-pole breakers only)
- Pole discrepancy (for single-pole breakers only)
- Motor run time
- Station battery voltages

Circuit Breaker Diagnostic Testing

Several diagnostic tests were developed as part of EPRI's *High Voltage Circuit Breaker Guidebook* [1]. This initial chapter of the Guidebook describes and explains a series of diagnostic tests for high voltage circuit breakers.

The first test described is timing. The timing test measures the operating times of various components of the circuit breaker during open, close, close-open and open-close operations.

What Are the Timing Test's Objectives?

The objectives of the timing test are to assist in making an assessment of the performance and condition of the operating mechanism in the circuit breaker. The various measured operating times are compared to the circuit breaker manufacturer's specifications to see if the circuit breaker is performing correctly. The operating times are also compared to previous test results from the same circuit breaker to determine if the measurements are remaining constant or changing. For example, a marked increase in the operating times may indicate a worn or binding mechanism or a possible lack of mechanism lubrication. If the timing measurements are not within the circuit breaker manufacturer's specifications, corrective action may be needed.

How is the Timing Test Performed?

This test is performed with the circuit breaker de-energized and out of service (off-line). Normally, all external high voltage connections are left connected to the circuit breaker during the test. Grounds are connected to one side of the circuit breaker to drain off any static charge from effecting the timing measurements, damaging the inputs to the field timing test set, and for personal safety. Current transformers in use on the circuit breaker are left connected to their protective relays and meters. Unused current transformers should have their

secondaries shorted and grounded. The dielectric medium in the circuit breaker needs to be at proper levels. On oil circuit breakers, the oil level in each tank needs to be within the limits on the oil level gauge. On SF6 gas circuit breakers, the SF6 gas pressure in each tank needs to be within the limits specified by the manufacturer. These limits are normally shown on the circuit breaker's nameplate. Surface moisture on the bushings has very little effect on timing measurements therefore the test can be performed in humid or wet weather conditions if necessary. The top terminals of the bushings should also be inspected and cleaned to insure a good connection point for the test equipment leads. The circuit breaker manufacturer's instruction manual should be consulted for the limits for the various timing measurements and for any special requirements for performing the timing test.

What Does the Test Check/Test/Measure/Evaluate?

The timing test measures the times that the main contacts and resistor switch contacts (when they exist) of the circuit breaker take to operate during open (trip), close, close-open (trip-free) and open-close (reclose) operations. These times can be measured in milliseconds or in cycles (based upon 60 cycles per second). Also, some timing test sets record the waveforms of the trip circuit current and the close circuit current. A listing of the measurements taken are listed below:

- Main Contact Opening Time
- Main Contact Opening Time Synchronization in Module
- Main Contact Opening Time Synchronization in Phase
- Main Contact Opening Time Synchronization in Breaker
- Main Contact Opening Time of Breaker
- Main Contact Closing Time
- Main Contact Closing Time Synchronization in Module
- Main Contact Closing Time Synchronization in Phase
- Main Contact Closing Time Synchronization in Breaker
- Main Contact Closing Time of Breaker
- Close-Open (Trip-Free) Dwell Time (also Close-Open (Trip-Free) Dwell Time in Breaker)
- Close-Open (Trip-Free) Dwell Time in Phase
- Close-Open (Trip-Free) Dwell Time in Module
- Open-Close (Reclose) Time (also Open-Close (Reclose) Time in Breaker)
- Open-Close (Reclose) Time in Phase
- Open-Close (Reclose) Time in Module
- Resistor Switch Contact Opening Time Relative to Test Initiation

- Resistor Switch Contact Opening Time Relative to Test Initiation Synchronization in Module
- Resistor Switch Contact Opening Time Relative to Test Initiation Synchronization in Phase
- Resistor Switch Contact Opening Time Relative to Test Initiation Synchronization in Breaker
- Resistor Switch Contact Closing Time Relative to Test Initiation
- Resistor Switch Contact Closing Time Relative to Test Initiation Synchronization in Module –
- Resistor Switch Contact Closing Time Relative to Test Initiation Synchronization in Phase
- Resistor Switch Contact Closing Time Relative to Test Initiation Synchronization in Breaker
- Resistor Switch Contact Opening Time Relative to Main Contact
- Resistor Switch Contact Opening Time Relative to Main Contact Synchronization in Module
- Resistor Switch Contact Opening Time Relative to Main Contact Synchronization in Phase
- Resistor Switch Contact Opening Time Relative to Main Contact Synchronization in Breaker
- Resistor Switch Contact Closing Time Relative to Main Contact
- Resistor Switch Contact Closing Time Relative to Main Contact Synchronization in Module
- Resistor Switch Contact Closing Time Relative to Main Contact Synchronization in Phase
- Resistor Switch Contact Closing Time Relative to Main Contact Synchronization in Breaker
- Trip Circuit Maximum Current
- Close Circuit Maximum Current
- Main Contact Bounce
- Resistor Switch Contact Bounce

Using Relays for Breaker Diagnostics

The research outlined in *Circuit Breaker Condition Monitoring: Using Relays for Breaker Diagnostics*. [2] describes the programming developed by EPRI and a utility project team to use existing relays to time first trips of selected breakers.

The objective of this research is to investigate how microprocessor-based protective relays programmed with logic and measurements can monitor trip-time performance of power circuit breakers and alarms for malfunctions or wear

problems. These successful laboratory tests were deployed to 11 field sites in early 2010. The results gathered since the deployment are helping the utility asset managers to make decisions about the need for replacement of these breakers. The utility has expanded the existing program deployment and are applying monitoring to different breaker types with new objectives—to optimize or extend time-based maintenance programs of reliable breaker types.

The monitoring included programming alarms for slow breakers before they reach the scheduled maintenance time and before a complete breaker failure leads to undesired backup tripping. The results of this work demonstrate the validity of the concepts and will facilitate application at other member utilities. [2]

Protection Relays Examined

The protection relays that were examined and identified as having functions to monitor wear or calculate circuit breaker health include the following:

- ABB Relion REB650 Busbar Protection
- SEL 400 series; SEL 351S, SEL 751 Relays
- GE UR family of relays
  - Some portions of the logical nodes relating to circuit breakers may be found in the following GE UR products: B30, C60, C70, D30, D60, F35, F60, G30, G60, L30, L60, L90, M60, T35, T60. [3]

ABB Relion REB650 Series

Note: Content from manufacturer manuals or websites has been used verbatim in this section to support clearer interpretations of the product or its prospective value. [4]

The numerical high impedance differential busbar protection REB650 IED provides its users with a wide variety of application opportunities. Designed primarily for the protection of single busbar with or without sectionalizers in high impedance based applications, it also offers high impedance differential protection for generators, autotransformers, shunt reactors and capacitor banks.

Its I/O capability allows you to protect up to three 3-phase high impedance differential protection zones with a single IED. A number of additional protection functions are available for the protection of the bus coupler bay. The additional protection functions include different types of phase and earth fault overcurrent protection and over voltage/under voltage protection. [4]

ABB Relion 650 Series - IEC 61850 SCBR

The breaker monitoring function SCBR is used to monitor different parameters of the breaker condition. The breaker requires maintenance when the number of operations reaches a predefined value. For a proper functioning of the circuit breaker, it is essential to monitor the circuit breaker operation, spring charge

indication or breaker wear, travel time, number of operation cycles and estimate the accumulated energy during arcing periods [4]. Table 2-1 provides the functions, values and accuracy of the monitored values.

Table 2-1
Breaker Monitoring SSCBR for ABB REB650 Series

Table 66. Breaker monitoring SSCBR

Function	Range or value	Accuracy
Alarm level for open and close travel time	(0 – 200) ms	±3 ms
Alarm level for number of operations	(0 – 9999)	-
Independent time delay for spring charging time alarm	(0.00 – 60.00) s	±0.2% or ±30 ms whichever is greater
Independent time delay for gas pressure alarm	(0.00 – 60.00) s	±0.2% or ±30 ms whichever is greater
Independent time delay for gas pressure lockout	(0.00 – 60.00) s	±0.2% or ±30 ms whichever is greater
CB Contact Travel Time, opening and closing		±3 ms
Remaining Life of CB		±2 operations
Accumulated Energy		±1.0% or ±0.5 whichever is greater

SEL-400 Series

The monitoring capabilities in the SEL-400 series manual are described with the use of SEL Word bits. While this report is intended to focus on the use of IEC-61850-90-3 objects, only some objects have been mapped over to IEC-61850 as of this report. Understanding that the relay has the capability to perform the monitoring via SEL messages is the important first step.

Note: Content from manufacturer manuals or websites has been used verbatim in this section to support clearer interpretations of the product or its prospective value. [5]

SEL Note: This section describes monitoring capabilities that are common to many SEL-400 series relays. Some relays include additional monitoring capabilities that are not common to other SEL-4 series relays. See the relay specific instruction manuals to determine the specific monitoring features available in each relay.

The relay features advanced circuit breaker monitoring. Figure 2-1 shows that the relay processes phase currents, circuit breaker auxiliary contacts, and the substation dc battery voltages to detect out-of-tolerance and maximum life circuit breaker parameters. These parameters include current interrupted, operating times, and contact wear. By using relay monitoring, maintenance personnel can determine the extent of a developing circuit breaker problem and select an appropriate response to correct the problem. These monitoring features are available online in real-time; you can detect impending problems immediately. The result is better power system reliability and improved circuit breaker life expectancy.

One of the many circuit breaker monitor features is the circuit breaker contact wear monitor. The relay tracks the number of circuit breaker close-open operations and respective fault interrupting levels for each of two circuit breakers. The relay uses data from the circuit breaker manufacturer to compare the recorded operational data with the manufacturer's recommended maintenance requirements. The relay notifies you when each set of circuit breaker pole contacts exceeds preset wear thresholds. Using this information, you can operate your substation more economically by accurately scheduling circuit breaker maintenance. [5]

You can program the relay to alarm when any of the above quantities exceed a preset threshold. In addition, the relay stores a 128-event circuit breaker history in nonvolatile memory. The circuit breaker history report includes circuit breaker mechanical operation times, electrical operation times, interrupted currents, and other important parameters. The alarm and reporting features help you operate your substation safely and reliably.

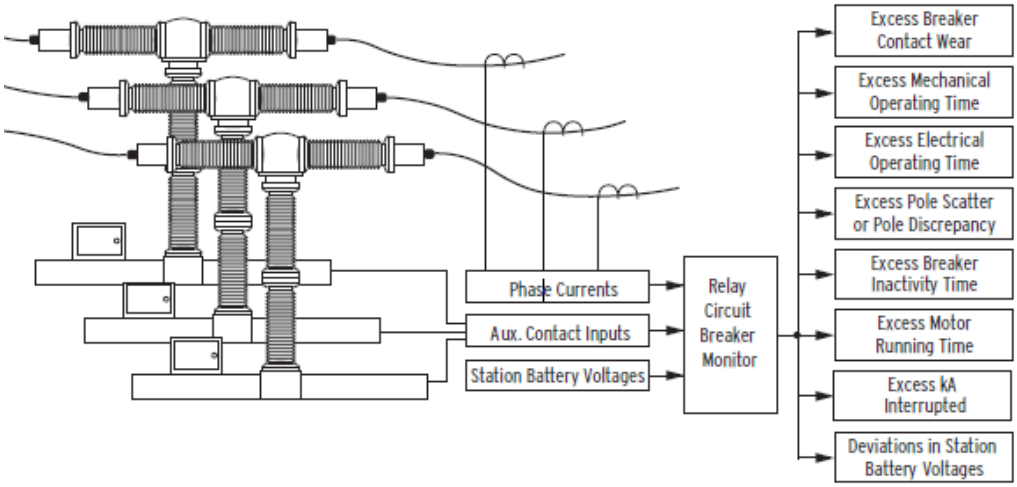

Figure 2-1
Intelligent circuit breaker monitor

SEL-400 Series - Circuit Breaker Contact Wear Monitor

The circuit breaker contact wear monitor in the relay provides information that helps you schedule circuit breaker maintenance. This monitoring function accumulates the number of close-open operations and integrates the per-phase current during each opening operation. The relay compares this information to a predefined circuit breaker maintenance curve to calculate the percent contact wear on a per-pole basis.

The circuit breaker contact wear monitor in the relay provides information that helps you schedule circuit breaker maintenance. This monitoring function accumulates the number of close-open operations and integrates the per-phase current during each opening operation. The relay compares this information to a predefined circuit breaker maintenance curve to calculate the percent contact wear on a per-pole basis.

The circuit breaker maintenance curve also incorporates the accumulated fault current arcing time (SUM I^2t), assuming an identical arcing time for each trip. You can obtain the one-cycle arcing time from circuit breaker manufacturer data.

The relay updates and stores the contact wear information and the number of trip operations in nonvolatile memory. You can view this information through any communications port.

Any phase wear percentage that exceeds the threshold setting B1BCWAT asserts the alarm Relay Word bit, B1BCWAL, for Circuit Breaker 1. You can use this Relay Word bit in a SELOGIC control equation to alert operations personnel, or you can control other functions such as blocking reclosing. The relay limits the maximum reported circuit breaker wear percentage to 150 percent.

The relay integrates currents and increments the trip counters for the contact wear monitor each time the SELOGIC control equation BM1TRP asserts…The default settings cause the contact wear monitor to integrate and increment each time the relay trip logic asserts.

SEL-400 Series - Other Circuit Breaker Monitor Functions

The SEL-400 series also can perform the following monitoring functions:

- kA Interrupt Monitoring
- Mechanical Operating Time
- Electrical Operating Time
- Pole Scatter
- Pole Discrepancy
- Circuit Breaker Inactivity Time Elapsed
- Motor Running Time

SEL-400 Series - Circuit Breaker Report

Figure 2-2 shows a sample breaker report (with typical data). The relay reports dc battery monitor voltages for the minimum dc voltage during a 20-cycle period at circuit breaker monitor trip initiation (BM1TRP) and for a 30-cycle window at circuit breaker monitor close initiation (BM1CLS). The circuit breaker report contains data only for options that are enabled.

```
=>BRE 1 <Enter>

Relay 1                                  Date: 03/20/2001  Time: 17:21:42.577
Station A                                Serial Number: 2001001234
Breaker 1
Breaker 1 Report

                          Trip A  Trip B  Trip C   Cls A   Cls B   Cls C
Avg Elect Op Time (ms)                                5.8     7.5     8.4
Last Elect Op Time (ms)    18.2    20.0    17.9     8.4    10.4     8.4
Avg Mech Op Time (ms)
Last Mech Op Time (ms)     25.8    24.4    26.5    30.1    26.3    34.2
Inactivity Time (days)        1       1       1       1       1       1

                              3 Pole Trip             3 Pole Close
                               AB      BC      CA      AB      BC      CA
Max Pole Scatter (ms)         5.1     3.1     5.0     6.3     4.1     2.1
Last Pole Scatter (ms)        2.1     1.0     3.1     4.1     2.1     2.1

                          Pole A  Pole B  Pole C
Accum Pri Current (kA)   3.13657 0.43533 0.41785
Accum Contact Wear (%)       0.5     0.5     0.5
Max Interrupted Current (%)  1.6     0.2     0.2
Last Interrupted Current(%)  1.6     0.2     0.2
Number of Operations           5       5       5

                          Alarm   Total Count
Mechanical Operating Time MSOAL       4
Electrical Operating Time ESOAL       3
Breaker Inactivity Time   BITAL       0
Pole Scatter               PSAL       2
Pole Discrepancy           PDAL       1
Current (kA) Interrupted  KAIAL       0
LAST BREAKER MONITOR RESET   03/15/2001   07:21:31.067

=>
```

Figure 2-2
Sample SEL-411L breaker report

GE UR Relay Family

Note: Content from manufacturer manuals or websites has been used verbatim in this section to support clearer interpretations of the product or its prospective value. [3] [6]

GE UR Relay – IEC 61850

The GE UR relays examined have two elements that have been developed by GE, and are shown as extensions for the SCBR logical node.

The first is Open Pole Detector (OpnPl). This element is instantiated in the following products: C60, D60, L60, L90. It does not apply to open pole detector supervisor N60. There are two tables in the manual for Open pole detector data objects (OpnPl0SCBR1) and (OpnPlΘSCBR1). [3]

The other element is Breaker Arcing Current (CBArc). This element is instantiated in the following products: B30, C60, C70, D30, D60, F35, F60, G30, G60, L30, L60, L90, M60, T35, T60. There is a table associated with breaker arcing current data objects (CBArc0SCBR) and breaker arcing current phase data objects (CBArcΦSCBR).

The principle behind the breaker arcing currents function is to accumulate breaker duty (I2t) and measure the fault duration.

Some of the features of this function are as follows: [6]

- Initiation: programmable per phase from any FlexLogic operand
- Compensation for auxiliary relays: 0 to 65.535 s in steps of 0.001
- Alarm threshold: 0 to 50000 kA2-cycle in steps of 1
- Fault duration accuracy: 0.25 of a power cycle
- Availability: 1 per CT bank with a minimum of 2

Dedicated Circuit Breaker Monitors Examined

The monitors that were examined and identified as having functions to monitor wear or calculate circuit breaker health include the following:

- CBWatch3
- ABB SwitchSync PWC600
- Qualitrol BCM200E

GE CBWatch3

Note: Content from manufacturer manuals or websites has been used verbatim in this section to support clearer interpretations of the product or its prospective value. [7, 8]

The CB Watch 3 system is a monitoring system for high voltage circuit breakers. It covers the following aspects:

- Operation timing
- SF6 gas leakage
- Arcing contact wear
- Control circuits
- Stored energy system
- Cabinet temperature

CBWatch3 fits into any kind of circuit breaker: Generator Circuit Breakers and Transmission Circuit Breaker (Live Tank, Dead Tank, Gas Insulated types).

CBWatch3 performs a permanent real time monitoring of operational parameters of circuit breakers and a synthetic condition assessment of critical equipment.

The CBWatch 3 provides an exhaustive real-time condition assessment of critical circuit breakers with incipient failure detection features to prevent catastrophic equipment failures, and to preserve network performances.

The CBWatch3 is directly installed on the circuit breaker cubicle or in the marshalling box. It records information coming from the sensors installed on the breaker and analyses it with standard models programmed into the system.

Asset Management

Implement an asset replacement strategy based on actual electrical and mechanical wear of your circuit breaker.

Electrical wear: actual measurement of arcing time makes it possible to calculate an accurate electrical wear of arcing contacts.

Mechanical wear: measurement of drive performance to detect mechanical deterioration (friction, corrosion, breakage, spring fatigue and damping failures)

Tracking and Recording of Gas Losses

Leakages can be detected before refilling threshold is reached.

Capabilities of the CBWatch3:

- Constantly monitor gas pressure and temperature mixture and calculates density
- Calculates short term and long term gas leakage rates down to values of 0.1%/year
- Extrapolates future density
- Keeps historical database of density and leakage values
- Detects and inhibits false alarms in case of liquefaction

Optimise Your Maintenance

Advanced alarms and trends analysis will warn you of incipient failures. Remote access to measurements and expert diagnostics, will help you to take the right decisions:

- Forecasted SF6 refilling or locking threshold alarms
- Remote access to measurements: operating times, opening speed, full travel curve, motor and pump, recharging times, coil current, primary current
- Expert diagnostics: measurement can be correlated with ambient parameters, operational stress and past history of equipment in order to produce alarms

Sensors Required for Different Functions

SF6 or gas mixtures:

- Pressure and temperature sensors

Operations:

- Coil signal sensors
- Auxiliary contacts
- Primary contact travel sensors

Primary current:

- Auxiliary current transformers

Spring mechanism:

- Spring motor limit switch contacts

Hydraulic mechanism:

- Pump start contacts
- Hydraulic pressure sensor

Auxiliary and control circuits:

- Temperature sensors
- Coil supervision relays

Calculation of Operating Times

For each opening operation and for each of the poles, a recording is made of:

- The date and time of the appearance of the open command on the control circuit.
- The “Reaction time” t1 between the appearance of the open command and the moment where the circuit breaker leaves the “closed” position and the 52A auxiliary contact changes status.
- The “Operation time” t2 between the appearance of the open command and the moment where the circuit breaker arrives in the “open” position and the 52B auxiliary contact changes status.

Similarly, for each closing operation, for each of the phases, a recording is made of:

- The date and time of the appearance of the close command on the control circuit.
- The "Reaction time" t1 between the appearance of the close command and the moment where the circuit breaker leaves the "open" position and the 52B auxiliary contact changes status.
- The "Operation time" t2 between the appearance of the close command and the moment where the circuit breaker arrives in the "closed" position and the 52A auxiliary contact changes status).

The system can then calculate the "Travel time" (t2-t1) when the circuit breaker moves. Figure 2-3 graphically depicts these measurements.

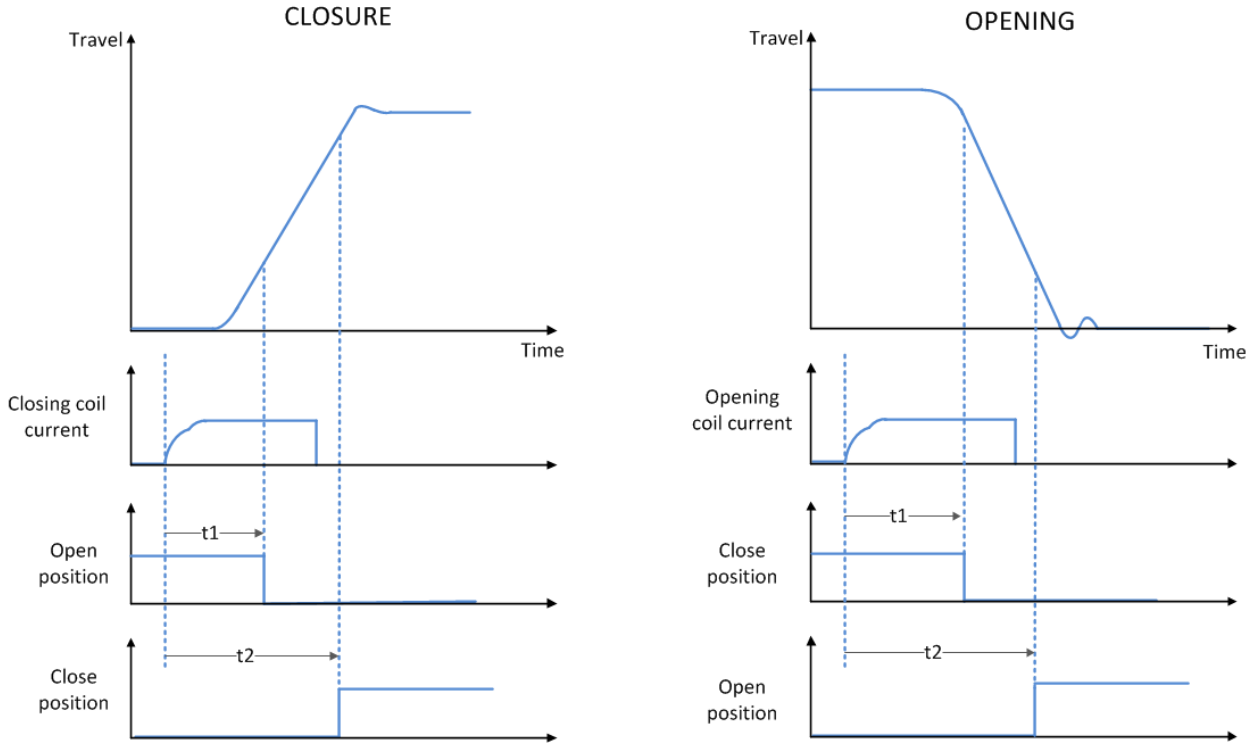

Figure 2-3
Operating time measurement [8]

Contact Wear Monitoring

Most circuit breakers use special arcing contacts specifically designed to withstand the high energy that occurs during arcing when opening a circuit breaker. They have a finite service life and therefore need to be replaced when it has been reached.

During each interruption, the interrupted current is monitored as well as the arcing time.

The arcing time is used to detect any increase showing degradation in the current interruption performance and possibly even a “non-interruption”.

If we measure the current interrupted, square it and multiply it by the arcing time, we get the “I2T” measure of the energy that the contact has been subjected to. By keeping a cumulative total of this energy throughout the life of the contact, we can estimate the “contact wear” that has occurred due to electrical deterioration.

ABB PWC 600 SwitchSync

Note: Content from manufacturer manuals or websites has been used verbatim in this section to support clearer interpretations of the product or its prospective value. [9] [10]

Switchsync PWC600 is a point-on-wave controller for high-voltage circuit breakers. Its purpose is to delay circuit breaker operations such that current inception or current interruption occurs at a phase angle that minimizes stress on the switched load or the circuit breaker. The IED is usually installed in the control room, where all required signals are present. [9]

Qualitrol BCM 200E

Note: Content from manufacturer manuals or websites has been used verbatim in this section to support clearer interpretations of the product or its prospective value. [11]

The BCM 200E is the newest addition to the QUALITROL range of circuit breaker testing and monitoring equipment. This permanently installed microprocessor based system monitors and records each operation of an independent pole operated circuit breaker and automatically compares this data with Absolute Limits, set as part of the configuration. In addition, recorded data is automatically compared with a known good reference record, or fingerprint, stored in memory. Any parameters outside user defined Operation Limits cause an alarm. The BCM 200E has the added advantage that it can perform accumulated contact duty calculations for the fault currents interrupted by each phase of the breaker.

When any of the recorded parameters of the breaker or accumulated contact duty exceed pre-programmed limits, the BCM 200E will generate software and hardware alarms to indicate that the breaker should be inspected.

The BCM 200E records waveform data for each breaker operation and retains data for approximately the last ten breaker operations in memory (depending on record size). Summary information for breaker operations is also stored in memory along with a log of alarms. Additionally, SF6 gas density transducers can be monitored and the information logged. Motor run-time event inputs allow logging of the duration and number of motor operations. These motor operations can be set to monitor the spring recharging motor, or compressor operations.

After a breaker operation record has been acquired by the BCM 200E, it must be analyzed. This analysis process includes the following tasks:

- Record verification
- Timing analysis
- Record summarization
- Profiling and finger print comparison

The BCM 200E is capable of detecting and processing several breaker operations in one record. The following operations/records can be identified and processed by the BCM:

- Trip only
- Close only
- A Trip followed by a Close
- A Close followed by a Trip
- Trip/Close/Trip
- Close/Trip/Close

The Trip and Close fingerprint profiles are automatically extracted from a single Phase R Trip record, and a single Phase R Close record, where no fingerprint profile exists, providing the event mode and absolute limit conditions are met. Multiple operation records will not create a fingerprint profile.

With the record identification complete, the BCM 200E will analyze the records, completing individual profiles within the record for each of the operations. The list of monitored information and calculated data produced by the BCM-200E are listed in Table 5-3. These alarms could be mapped to IEC 61850-90-3 SCBR logical node in the future.

Section 3: Asset Data Models

On the surface when discussing circuit breaker condition monitoring it seems as simple as having a circuit breaker in the field, installing a monitor on it and sending the data to the central operations center. However, circuit breakers exist in a variety of physical configurations and this results in the need for a variety of associated data models. This section will present some of the complexity associated with circuit breakers and their respective configurations and data models.

Data Models

Extensive work by industry experts over the last 20 years has led to the development of data models for many aspects of the electric utility domain. The two largest efforts have been the development of the Common Information Model and also IEC 61850. Both of these standards contain data models relevant to asset health and will be presented in the following section.

Common Information Model (CIM)

The Common Information Model (CIM) is an open standard for representing power system components originally developed by the Electric Power Research Institute (EPRI) in North America and now a series of standards under the auspices of the International Electrotechnical Commission (IEC). The standard was started as part of the Control Center Application Programming Interface (CCAPI) project at EPRI with the aim of defining a common definition for the components in power systems for use with the Energy Management System (EMS) Application Programming Interface (API), now maintained by IEC. [12]

For more information on CIM, please see the Common Information Model Primer: Third Edition Technical Report: 3002006001

These three IEC standards, 61970-301, 61968-11 and 62325-301 that are collectively known as the Common Information Model (CIM) for power systems.

1. IEC standard 61970-301[1] is a semantic model that describes the components of a power system at an electrical level and the relationships between each component.

[1] "IEC 61970 Energy management system application program interface (EMS-API) - Part 301: Common Information Model (CIM) Base", IEC, Edition 3.0, August 2011.

2. The IEC 61968-11[2] extends this model to cover the other aspects of power system software data exchange such as asset tracking, work scheduling, and customer billing.
3. The CIM for Electricity Markets then extends both these models with IEC 62325-301[3] to cover the data exchanged between participants in electricity markets.

The Common Information Model (CIM) for power systems and currently has three primary uses:

- To facilitate the exchange of power system network data between organizations.
- To allow the exchange of data between applications within an organization.
- To exchange market data between organizations. [12]

In this report, we will focus on the second use, the exchange of data between applications within an organization.

The three IEC standards taken together allow a field-to-enterprise picture of an asset and its associated measurements to be built. Real-time condition monitoring data starts in the physical model of IEC 61850 and is put into the electrical network perspective through the models described by IEC 61970. When the real-time data and electrical network contexts are combined with asset-specific data (model/manufacturer, maintenance/test records, etc.) through the models in IEC 61968, the result is a powerful ability to analyze the health of utility assets. [13]

One of the key features of the CIM is the way it uses relationships to put context around the data. This context is helpful to the software developers, and also to the end users, since it creates an automatic context for the data under consideration.

Inheritance

Inheritance (also known as Generalization) defines a class as being a sub-class of another class. As a sub-class, it inherits all the attributes of its parent, but can also contain its own attributes.

Classes can be **abstract** or **concrete**, depending on whether they are expected to be instantiated. If the "Class" is in the "Class Hierarchy" represents a common parent for many other classes, then it is considered abstract, but if it is something that may be instantiated, then it is concrete.

---

[2] "IEC 61968 Application integration at electric utilities - System interfaces for distribution management - Part 11: Common Information Model (CIM)", IEC, Edition 1.0, July 2010.

[3] "IEC 62325 Framework for energy market communications -Part 301: Common Information Model (CIM) Extensions for Markets", IEC, Draft.

Figure 3-1 illustrates this class hierarchy with the abstract *Shape* class along with its child classes *Circle*, *Rectangle* and *Triangle* and *Square* as a subclass of *Rectangle*. Since the user will not be creating instances of *Shape* it is considered to be an *abstract* class while its children are all *concrete* classes as the diagram will contain *circles*, *rectangles*, *triangles*, *squares* etc.

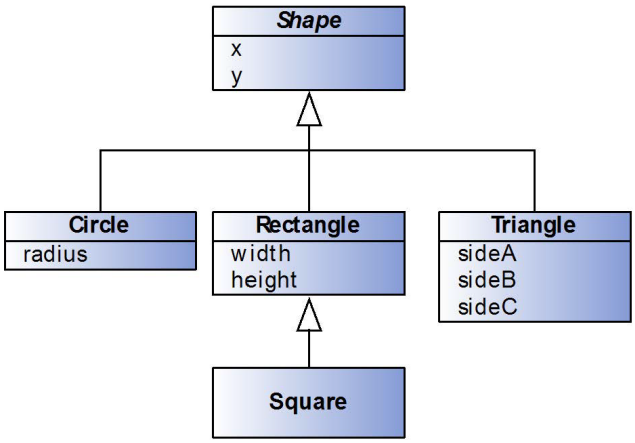

Figure 3-1
Class hierarchy for diagram shapes

CIM Modeling of Circuit Breakers

The detail of classes used in common instance templates for breakers is shown in the class diagram of Figure 3-2.

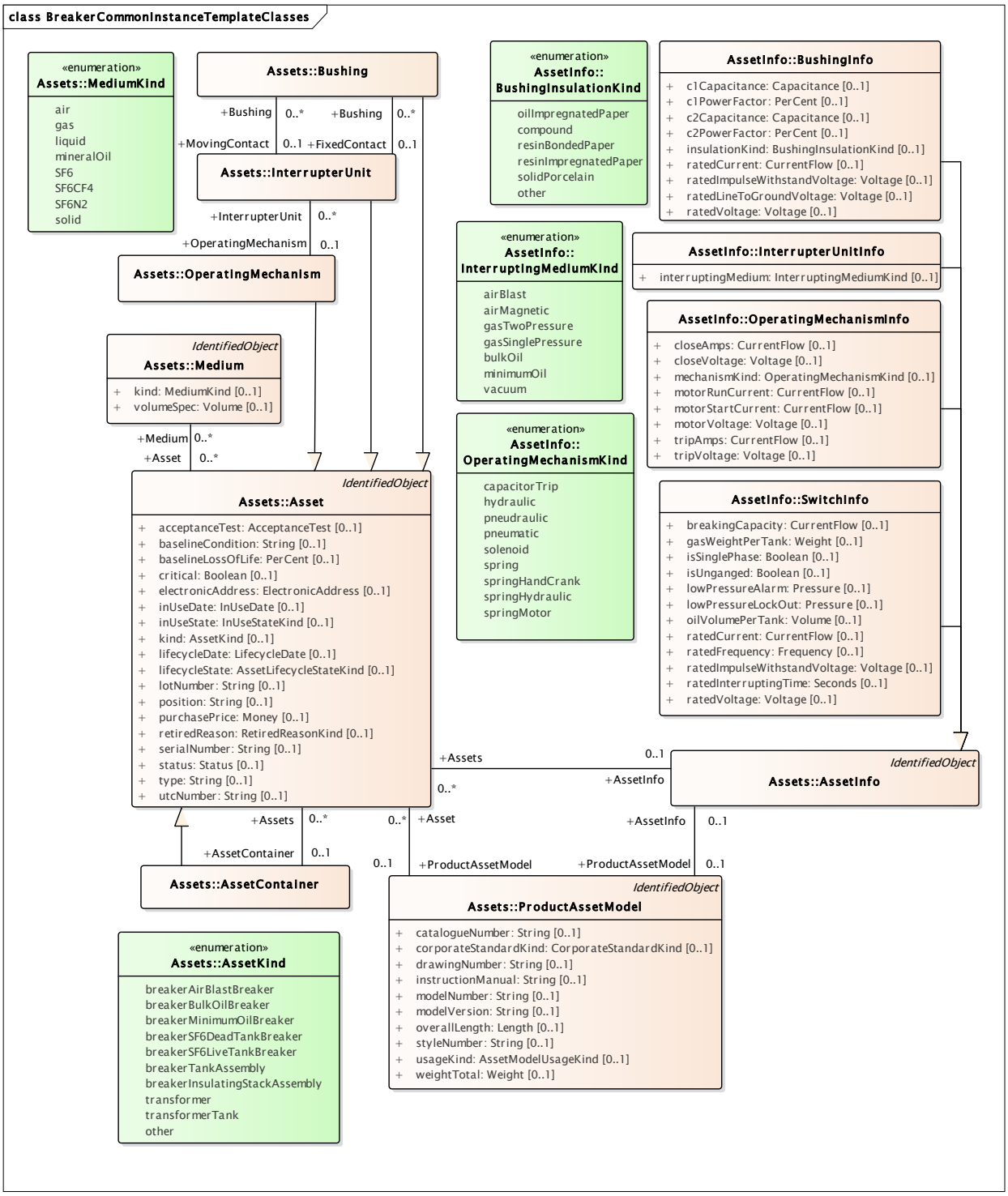

Figure 3-2
Detail of classes utilized in common instance templates for breakers

Impact of Circuit Breaker Configuration on Data Models

Five major families of Transmission breakers have been identified, based primarily on unique combinations of insulating and extinguishing [14]. They are:

- SF6 dead tank, where SF6 gas is used for both insulation and arc extinguishment. These breakers have SF6-filled insulated (grounded) tanks containing interrupter(s) with connections made via bushings.
- SF6 live tank, where Insulator stacks provide electrical isolation and SF6 provides arc-extinguishment. SF6-filled interrupter chamber(s) are located on top of insulator columns, with the number of insulator columns ranging from one to four per pole.
- Bulk oil, where mineral oil is used for both insulation and arc extinguishment. These breakers have mineral oil-filled insulated (grounded) tanks containing interrupter(s) with connections made via bushings.
- Minimum oil, where insulator stacks provide electrical isolation and mineral oil provides arc extinguishment. Oil-filled interrupter chamber(s) are located on top of insulator columns, with the number of insulator columns ranging from one to two per pole.
- Air blast, where insulator stacks provide electrical isolation and pressurized air provides arc extinguishment. These breakers have air-filled interrupter chamber(s) located on top of insulator columns, with the number of insulator columns ranging from one to ten per pole.

For each family of breakers, there are specific characteristics which govern the components present in the family's common instance templates. These are summarized in Table 3-1.

Table 3-1
Salient Characteristics for Each Transmission Breaker Family [15]

Transmission Breaker Family	Salient Characteristics
SF_6 dead tank	Poles/tank Poles/mechanism Number of interrupters in series ("breaks")/pole
SF_6 live tank, Minimum oil, Air blast	Poles/base Stacks/pole Poles/mechanism Number of interrupters in series ("breaks")/pole
Bulk oil	Poles/tank Poles/mechanism

Figures 3-3, 3-4 and 3-5 provide examples of how these configuration differences can be represented through CIM.

The breaker illustrated in the object diagram of Figure 3-3 is an SF6 breaker with one tank for all three poles, a single break per pole and a single mechanism for all three poles [16].

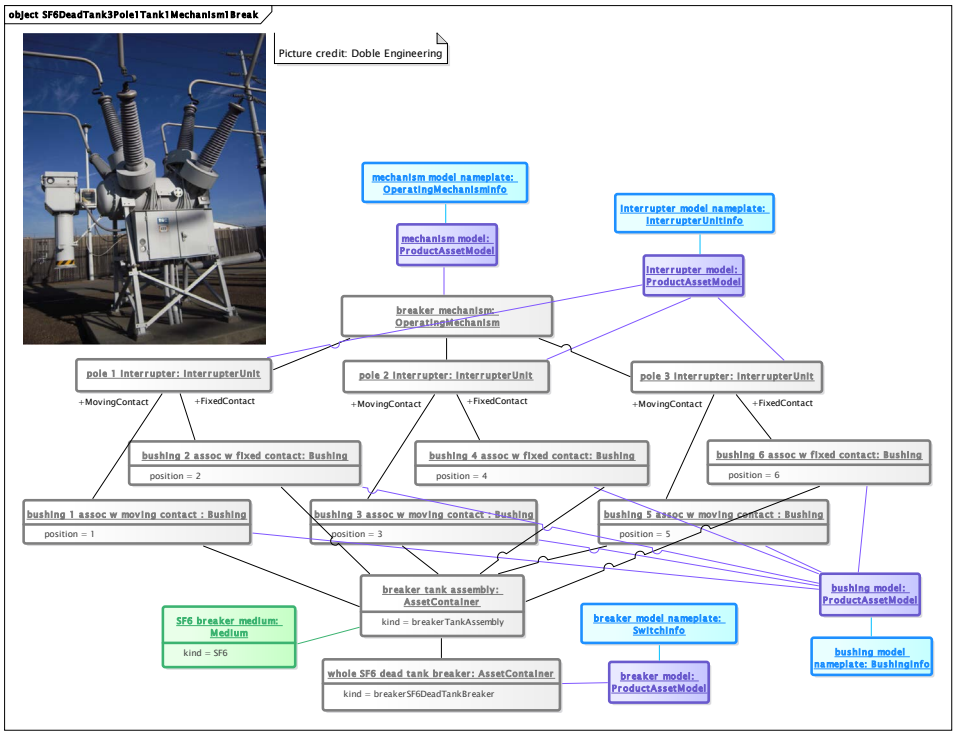

Figure 3-3
Common instance template for SF6 dead tank breaker with 1 tank, 1 mechanism, single breaks

The breaker illustrated in the object diagram of Figure 3-4 is a SF6 live tank breaker with three insulating stacks on one base, a single mechanism for all three poles and single break interrupters.

The breaker illustrated in the object diagram of Figure 3-5 is a SF6 live tank breaker with 3 insulating stacks on one base with a single break per pole and a single mechnism for all three poles.

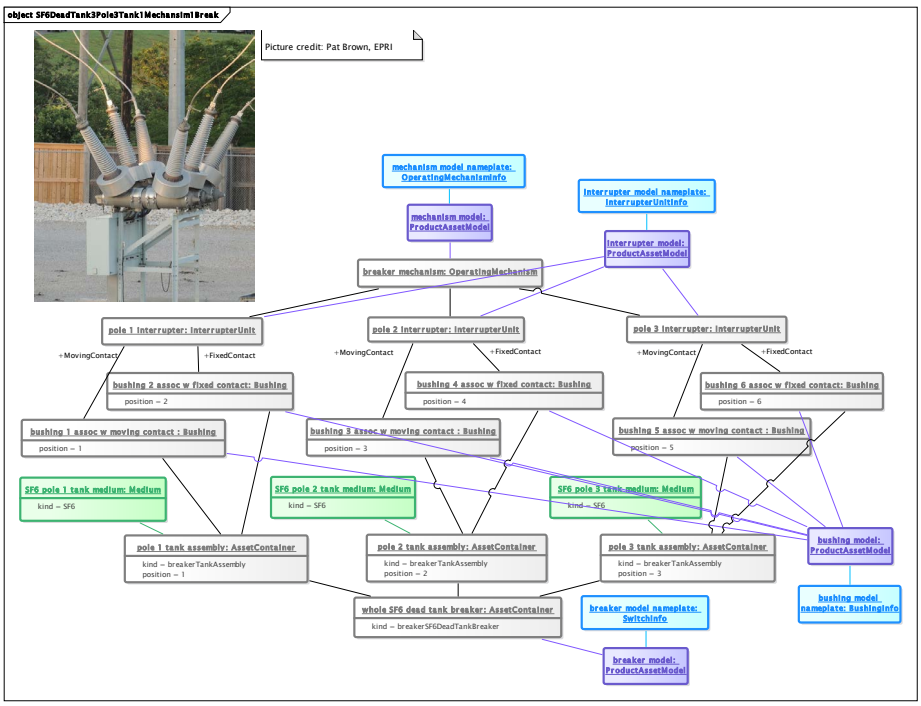

Figure 3-4
Common instance template for SF6 dead tank breaker with 3 tanks, 1 mechanism, single breaks

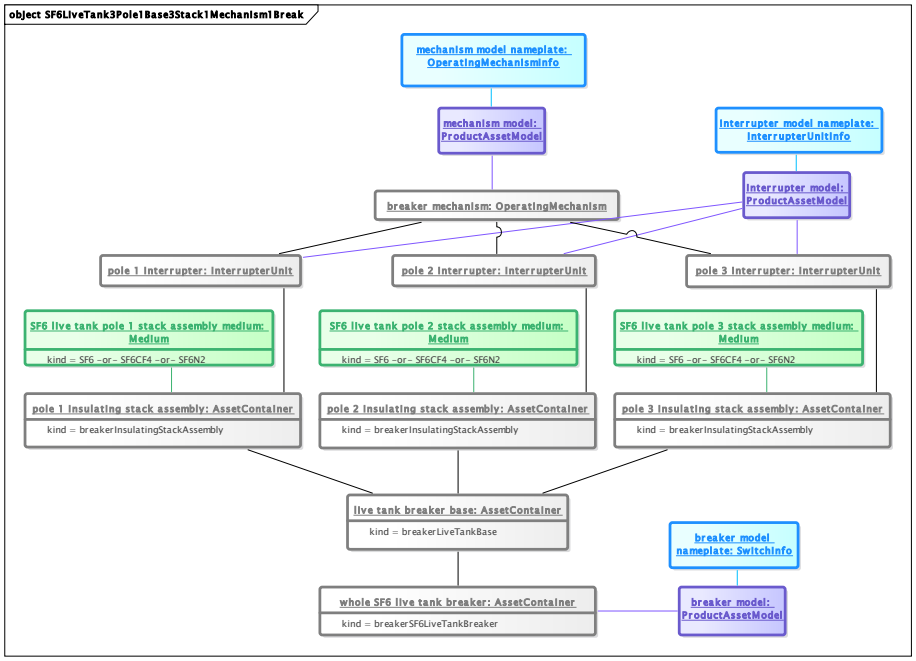

Figure 3-5
Common instance template for SF6 live tank breaker with 3 insulating stacks on one base, 1 mechanism, single breaks

CIM Asset Health Data - Online Monitor Model

The CIM supports the description of the online monitor itself as the source of field measurement values. Understanding the model and manufacturer of an online monitor is sometimes crucial to interpreting the true meaning of monitored values. Figure 3-6 shows the classes which support the definition of an online monitor as an asset and as a source of measurement values. An online monitor as an asset itself is described by the Asset class, where model and manufacturer can be specified. The role of the online monitor as a measurement value source is described by the IED class. The Asset to IED association is made through the PowerSystemResource class.

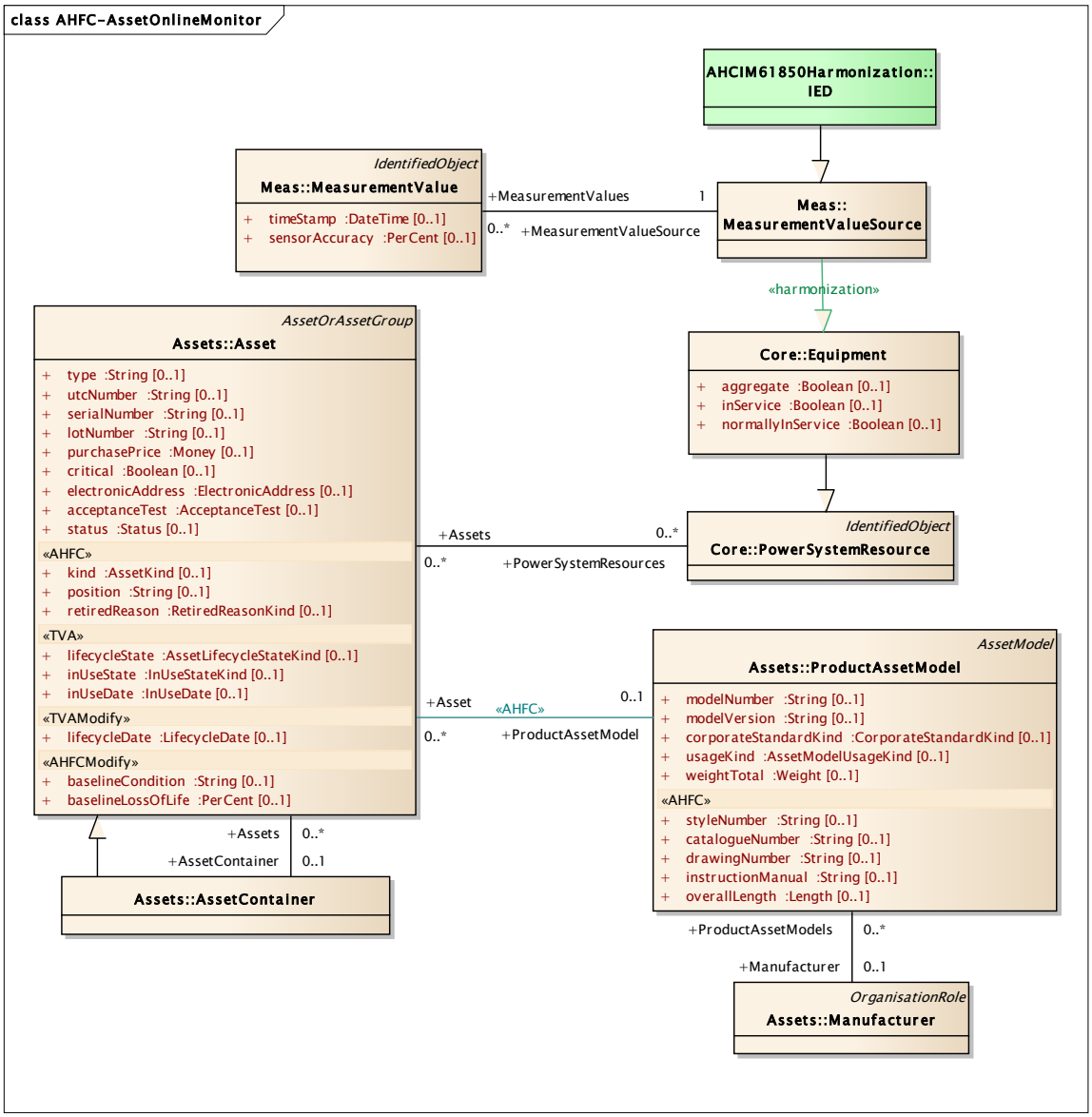

Figure 3-6
CIM UML for online monitor description

Figure 3-7 illustrates how the classes described above could be used to thoroughly describe a Kelman monitor and the hydrogen, carbon dioxide and acetylene values it is monitoring on a transformer tank.

CIM model support for the data provided by online monitors is extensive. The ability to accurately describe calculated or periodic field data is provided along with the ability to accurately describe the model and manufacturer of online monitoring tools. Together these allow analytics to have an accurate understanding of the meaning of the data being received from online monitors.

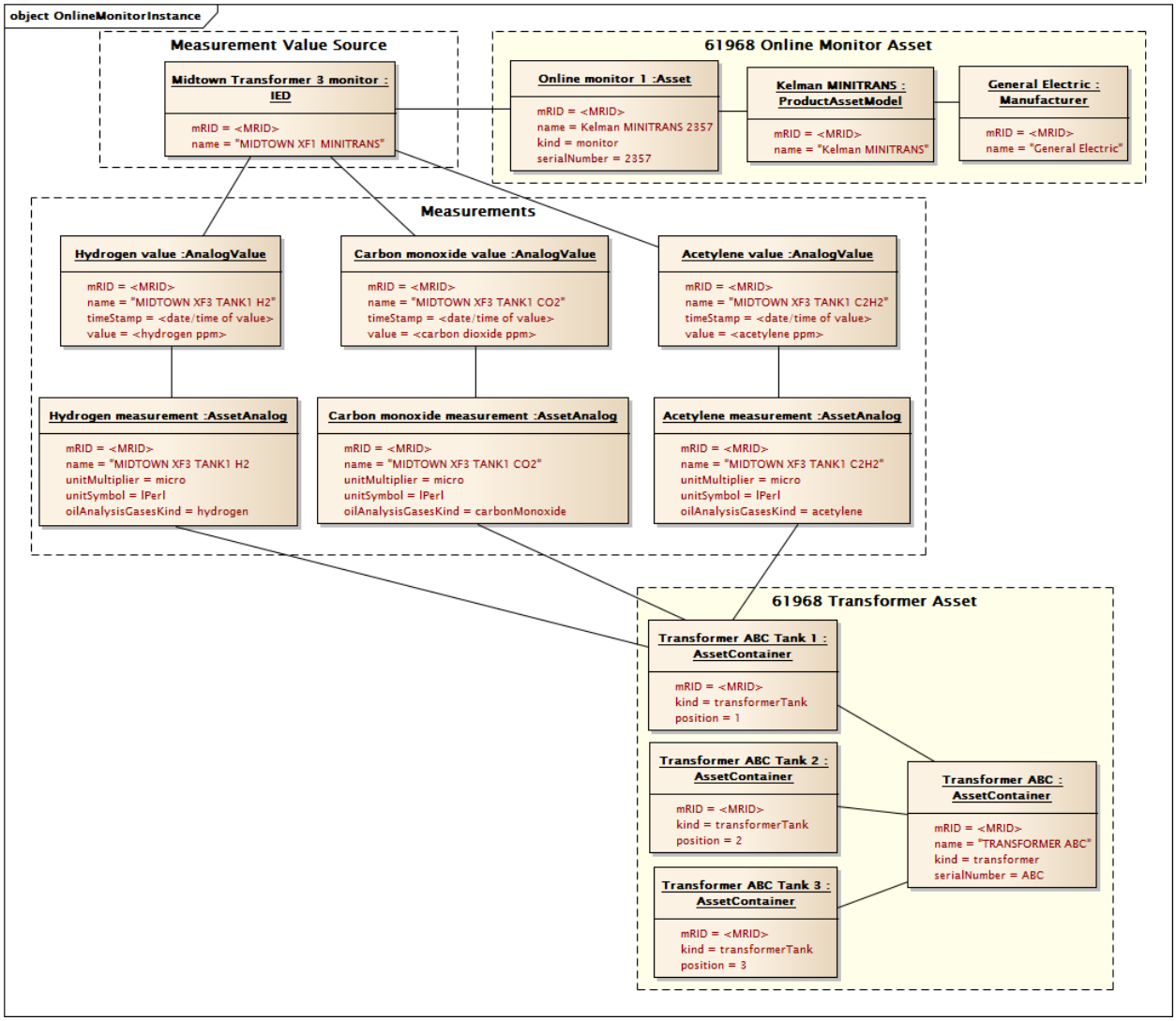

Figure 3-7
Example of online monitor as measurement value source and asset

CIM - Switch Operations Summary

Accurately tracking breaker operations over time has always posed challenges. There are multiple possible sources of counts: real-time data historians, various field inspections, related IEDs. The most accurate source can vary by type and age of device, installed monitoring, even by operating company and utility. The CIM model, shown in Figure 3-8, is predicated on the assumption that there is a function in place to determine the most accurate 'official' count for each breaker. The SwitchOperationSummary class hosts that 'official' operation count along with official counts for fault operations and motor starts.

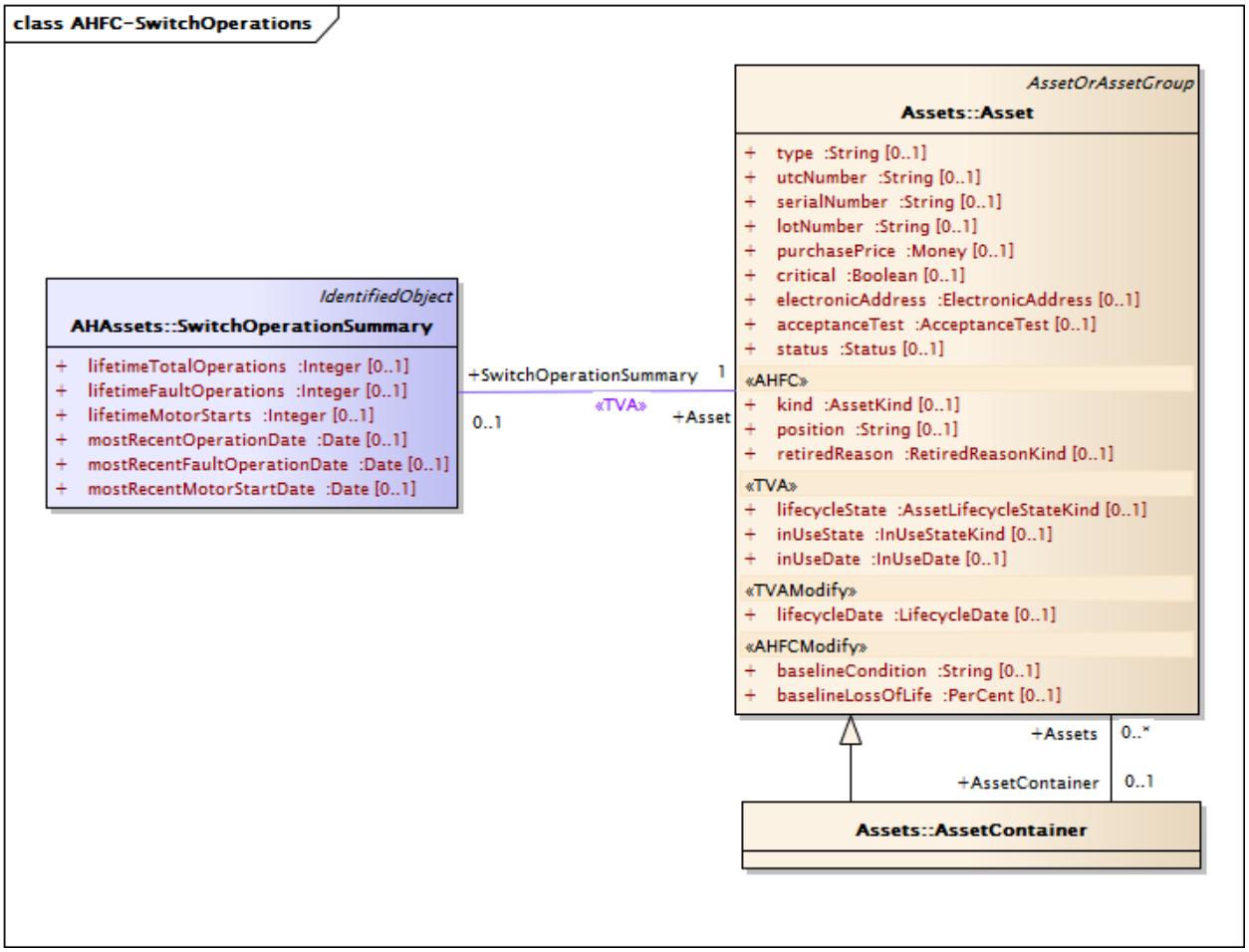

Figure 3-8
CIM UML for switch operations

The SwitchOperationSummary class is new and has not yet been vetted by utility implementations, but it suggests a strategy for effectively managing operations count data, which is data that analytics routinely use as input.

CIM - Asset Failure

The CIM classes which support asset failure data reporting are shown in Figure 3-9. The FailureEvent class, intended to be instantiated for each asset failure, has multiple enumerated attributes which allow extensive and specific recording of the details of the asset failure.

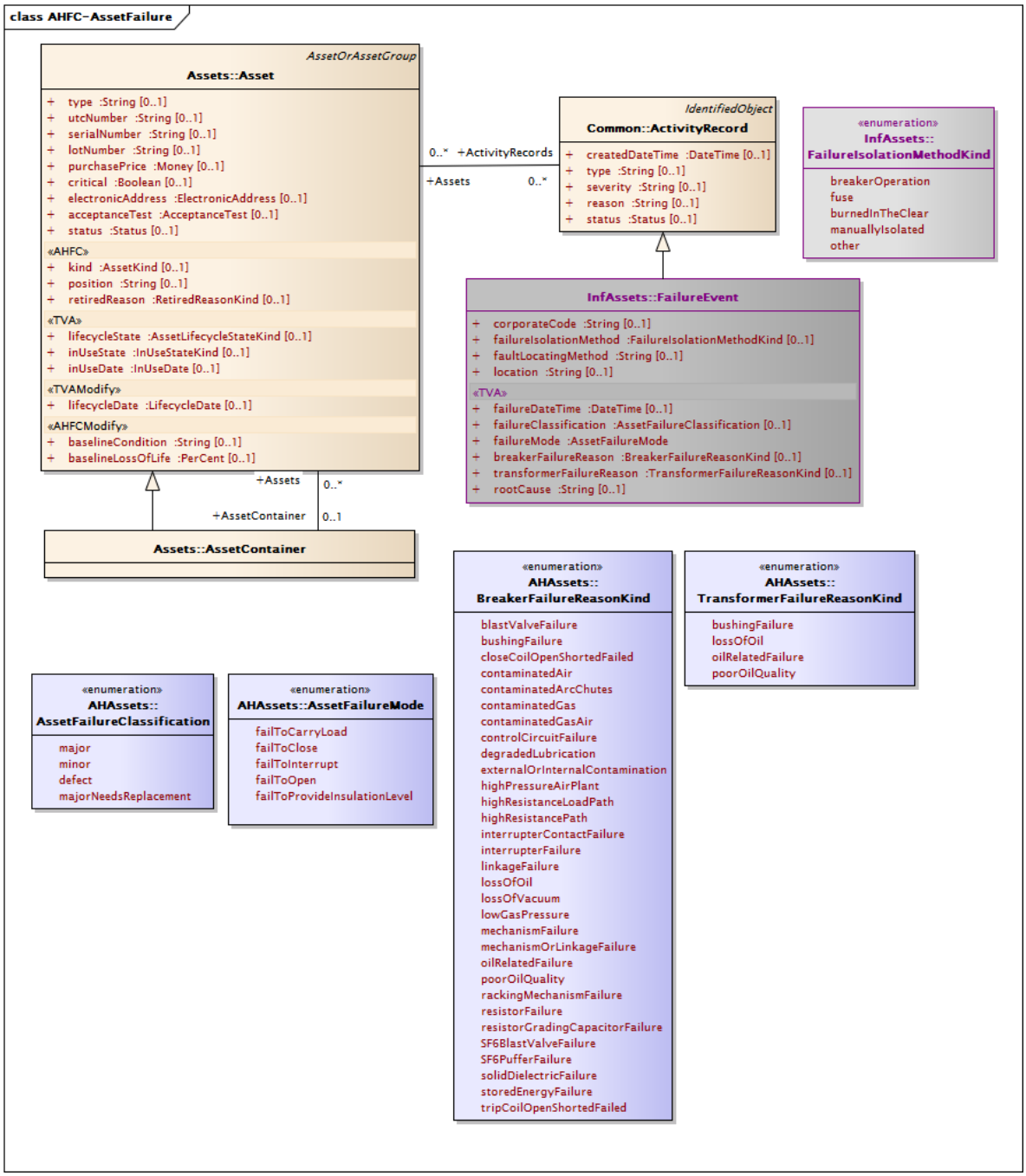

Figure 3-9
CIM UML for asset failure

Connecting Data Between Models

These three IEC standards (IEC 61850, 61970 and 61968), when taken together, allow a consolidated, field-to-enterprise picture of an asset and its associated measurements to be created.

A conceptual model of this enterprise data linkage and their interconnection using both CIM and IEC 61850 is shown in Figure 3-10 [17]. This figure includes the functional blocks of the system components involved. The transformer monitor in the diagram would be substituted for a circuit breaker monitor.

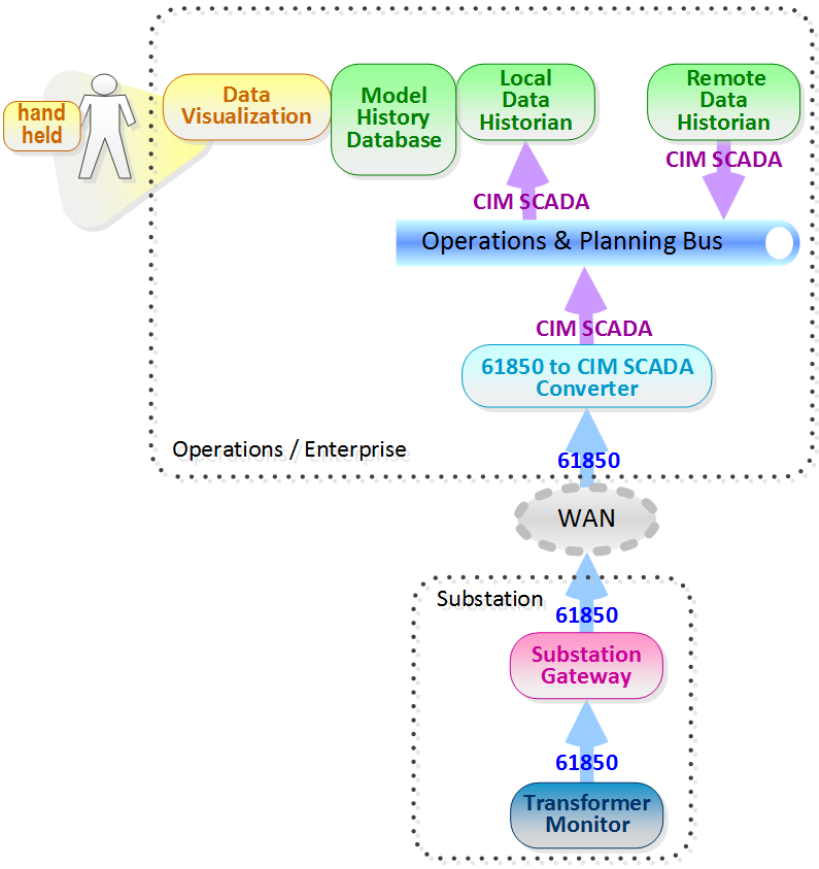

Figure 3-10
Conceptual System Architecture

For a more concrete view how this is achieved, Figure 3-11 provides a detailed example of Circuit Breaker measurement and status data from a field device is mapped to the Enterprise.

Starting on the left side of the figure, the real-time condition monitoring data starts in IEC 61850 format and is linked to its power system equivalent reference perspective (middle of the figure) through IEC 61970. When this data is combined with asset-specific data (model/manufacturer, maintenance/test records, etc.) through IEC 61968, (right side of figure) the result is a powerful ability to analyze the health of utility assets. [13]

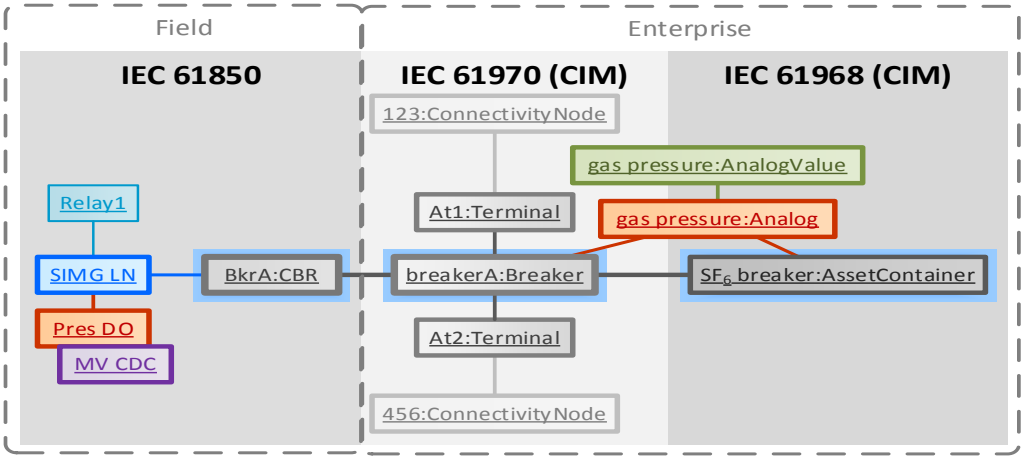

Figure 3-11
Field to enterprise data linkages through three IEC standards

This data structure and modeling approach, has been vetted by industry and many utilities worldwide. The ease in replicating this framework allows the utility to capture and store asset condition data for all of the related elements in a single location that is accessible by numerous applications and users. This data structure can even be leveraged for future applications that are developed.

Section 4: IEC 61850 Condition Monitoring

Background

At the IEC TC 57 Working Group 10[4] (WG 10) meeting in April 2007, an initial proposal presentation was made to consider a new work item to address Condition Monitoring and Diagnostics. After several discussions and meetings, the decision was made by WG 10 in November 2008 to proceed with the initial drafting of Technical Report 61850-90-3.

The logical node (LN) design concept on Condition Monitoring and Diagnostics included the following:

- Hierarchical Design
- Application Oriented Design based on Function
- Maximize Reusability of existing Model Objects

Figure 4-1 illustrates the information flow initially proposed.

By June 2010, the WG 10 members had made significant progress and had developed a proposed modeling approach using the auxiliary power system model as a reference.

Table 4-1 shows an example of a typical auxiliary power system and its proposed breakdown to associated IEC 61850 LNs. It is important to consider the functional breakdown of a system, and the requirements for covering all the related considered functions for a condition monitoring application. [18]

[4] IEC TC57: Power systems management and associated information exchange Working Group 10: Power system IED communication and associated data models

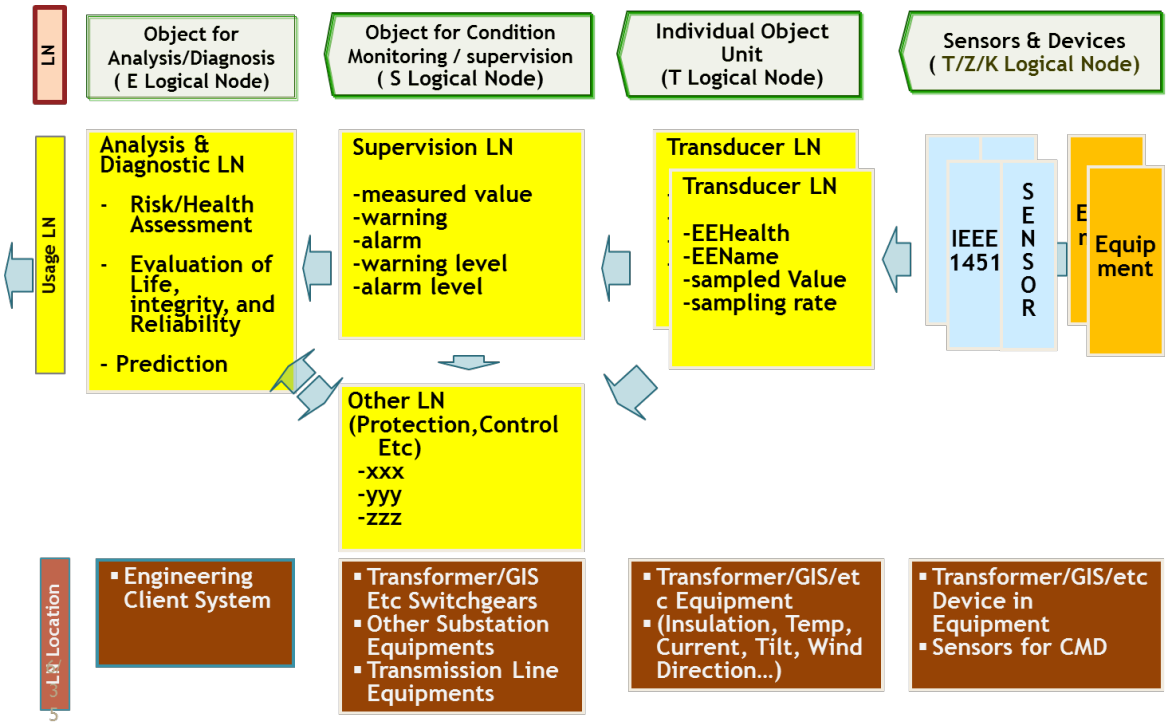

Figure 4-1
Early proposed logical node design for condition monitoring and diagnostics

Table 4-1
Example Functional Breakdown of Condition Monitoring Based on Auxiliary Power System Model

Typical auxiliary power system	IEC 61850 proposed LN breakdown (requirement)
Secured AC system from AC input with AC backup	IEC 61850 proposed LN breakdown (requirement)
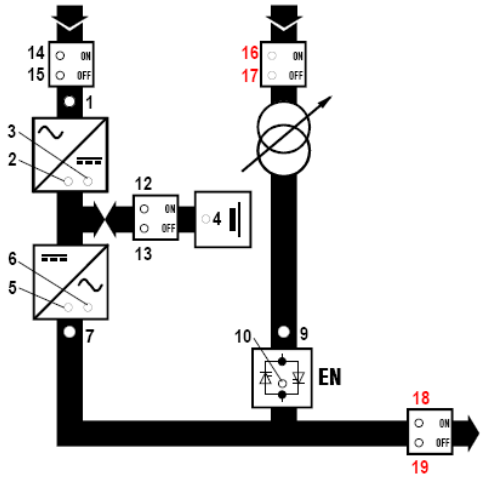	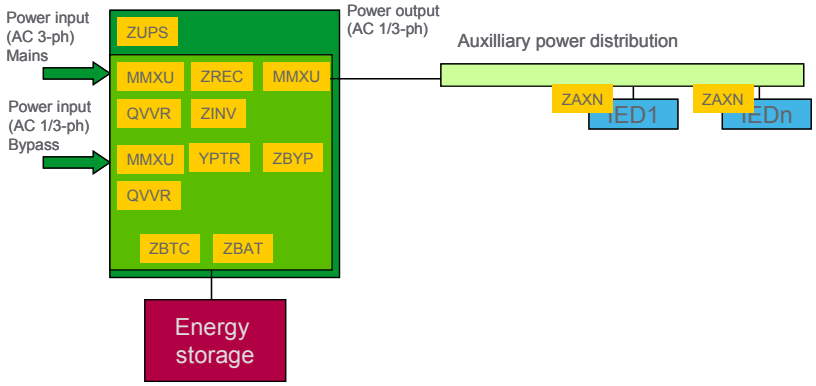 Where : • ZUPS represent the overall Auxiliary Power system status • MMXU, QVVR, ZREC, ZINV cover the secured AC input monitoring and conversion • MMXU, QVVR, YPTR cover the bypass AC input monitoring and conversion • ZBYP is used to automatically bypass the secured main path by the backup AC one • MMXU is used to monitor the AC output • ZAXN is used to monitor the auxiliary power at consumer level

By January 2012, a comprehensive draft of the proposed Technical Report for IEC 61850 Part 90-3 was completed. The full title of the report is: *Using IEC 61850 for Condition Monitoring Diagnosis and Analysis*. Some of the use cases that were considered in the Technical Report are shown below.

Condition Monitoring Use Caese Example

Abrasion Monitoring

The goal of abrasion monitoring is to calculate the effective wear on the main contacts, especially for circuit breakers. [19]

The Entity Relationship Diagram for abrasion monitoring use case is shown in Figure 4-2. This diagram shows the relationship between the various actors, defined in Table 4-2, and the three use cases described in Table 4-3.

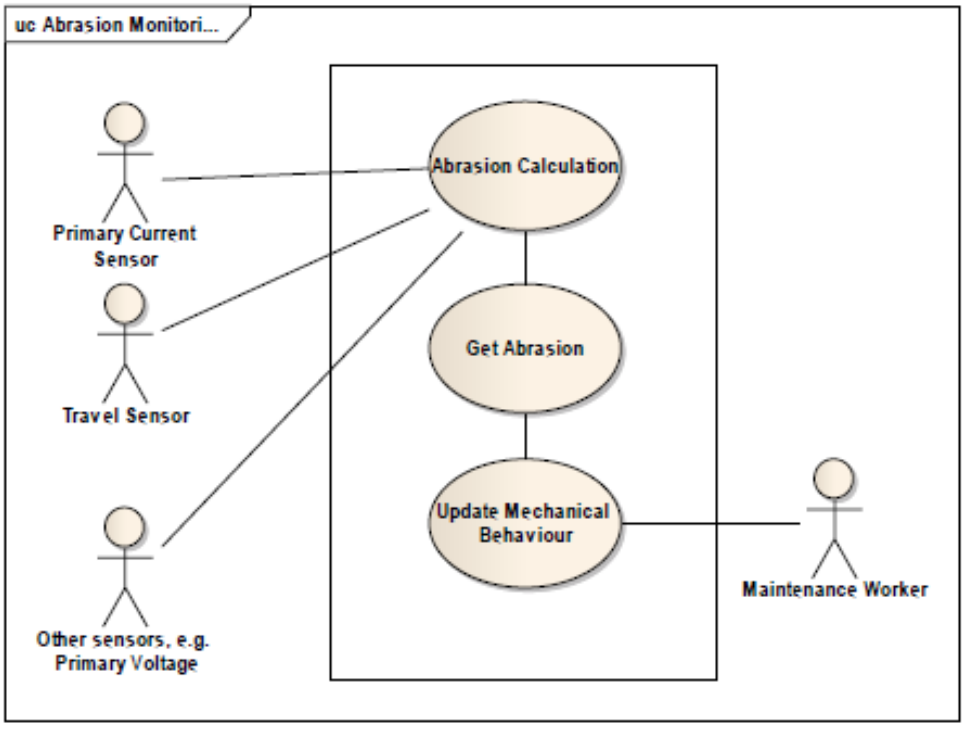

Figure 4-2
Entity relationship diagram for abrasion monitoring

Table 4-2
Actor(s) for Abrasion Monitoring

Actor Name	Role description
Primary current sensor	Measures the primary current flow through main contacts of the circuit breaker
Travel sensor	Measures the movement of the main contact of the circuit breaker
Other sensors	Depending on the technology additional sensors can be used
Maintenance Worker	Inspects and repairs the switch gear

Table 4-3
Three Use Cases for Abrasion Monitoring

Name	Services or information provided
Abrasion Calculation	Measures the current and contact movement, calculates the abrasion, and sends notification to the user
Get Abrasion	Get results from Abrasion Calculation
Update Mechanical Behaviour	Measure the movement of the contact and provide results

For each use case above, the basic flow of information is detailed in Table 4-4 through Table 4-6 below.

Table 4-4
Use Case 1: Abrasion Calculation

Use Case Step	Description
Step 1	On each operation: • Measure the current flow through each contact • Measure the contact movement (travel) • Optional: measure additional signals, e.g., voltage
Step 2	Calculate the abrasion of each contact for this operation
Step 3	Accumulate the abrasion
Step 4	Provide the results to the user Send a notification if a limit has been passed

Table 4-5
Use Case 2: Get Abrasion

Use Case Step	Description
Step 1	Get results from Abrasion Calculation

Table 4-6
Use Case 3: Update Mechanical Behavior

Use Case Step	Description
Step 1	On each operation: • Measure the movement of the contact • Optional: Measure the movement of the piston, energy level, motor current etc.
Step 2	Compare the measurements with normal behavior
Step 3	Provide the results to the user Send a notification if a limit has been passed

To develop the requirements for the condition monitoring, the Working Group conducts a detailed process using use cases like the examples above.

State of the Standard: 2016

On May 12, 2016 the IEC TR 61850-90-3:2016 was published and is available for use by manufacturers. The formal name is "Communication networks and systems for power utility automation - Part 90-3: Using IEC 61850 for condition monitoring diagnosis and analysis".

The standard addresses communication aspects for utility specific sensor networks and information exchange with asset management systems.

Since the outcome of [the Part 90-3] work will affect several parts of IEC 61850, in a first step, this technical report has been prepared to address the topic from an application specific viewpoint across all affected parts of IEC 61850. Once this technical report has been approved, the other affected parts of the standard will be amended with the results from the report. [20]

Benefit of the Standard

For utilities, a key benefit of this standard will be increased interoperability for multi-vendor condition monitoring devices. This feature helps utilities reduce cost through easier integration of data and greater flexibility in product selection. For utilities to realize this benefit, it is critical that product manufacturers make products that comply with this portion of the standard.

IEC 61850-90-3 Data Object Name Semantics and Enumerations

IEC 61850 Gas Insulated Switchgear (GIS)/Circuit Breaker Measurements

A condition monitoring system for GIS acquires condition data from sensors that are installed at the different GIS components. Typically, the following GIS components are of interest:

- The circuit breaker including main contacts
- The operating mechanism of the circuit breaker
- All SF6 gas compartments
- Other HV switches of the GIS as dis-connector or earth switches

In the IEC 61850-7-4 Edition 2, the Logical Nodes SSWI, SCBR, SOPM and SIMG are presented for gas insulated switchgear (GIS) monitoring.

The primary Logical Node for circuit breaker condition monitoring, and the focus of this report, is SCBR. However, there are other Logical Nodes that gather information related to overall asset health calculations. These LNs are shown in Table 4-7.

Unless otherwise noted in the table as added by IEC 61850-90-3, the Logical Nodes definitions can be found in IEC 61850-7-4 [15].

Table 4-7
Useful IEC 61850 Logical Nodes for Circuit Breaker Health

Logical Node Group	Logical Nodes Providing Function
Supervision and Monitoring	Circuit Breaker Supervision (SCBR)
	Supervision of operating mechanism (SOPM)
	Insulation Medium Gas (SIML)
	Switchgear Supervision (SSWI)
	Temperature Monitoring (STMP)
	Supervision of Insulation Gas (SIMG)
Instrument Transformers	Angle (TANG)
	Pressure Sensor (TPRS)
	Current Transformer (TCTR)
	Voltage Transformer (TVTR)
Switchgear	Circuit Breaker (XCBR)

Circuit Breaker Modeling

A three phase circuit breaker system could be modeled as below [19]:



Figure 4-3
Example of 3 phase circuit breaker modelling

The LN TANG allows measuring the angle between the main sharp and the reference.

The LNs TCTR and TVTR allow sending the current and the voltage respectively to the IED which controls the circuit breaker.

The LN SCBR provides the data to monitor the circuit breaker like status information, contact abrasion alarm, contact abrasion warning, and current coil.

A data object for the voltage coil is not defined in this logical node so a data object for this parameter will be created in order to monitor the voltage of the coil. This voltage coil is mandatory in case of point-on-wave (POW).

The LN SOPM is used for supervision of operating mechanism for switches like a circuit breaker. It is used to assess the condition of the operating mechanism and can be used to indicate a possible malfunction in the future. [15]

Common Data Classes and Data Objects in SCBR Class

Figure 4-4 depicts an IEC 61850 functional diagram for an IED with SCBR Logical Node.

Table 4-9 shows all the data object names and descriptions contained within the SCBR Class, as contained in the IEC 61850-90-3 Technical Report from 2016.

As a reference, the description of the common data classes used in this table can be found in Table 4-8.

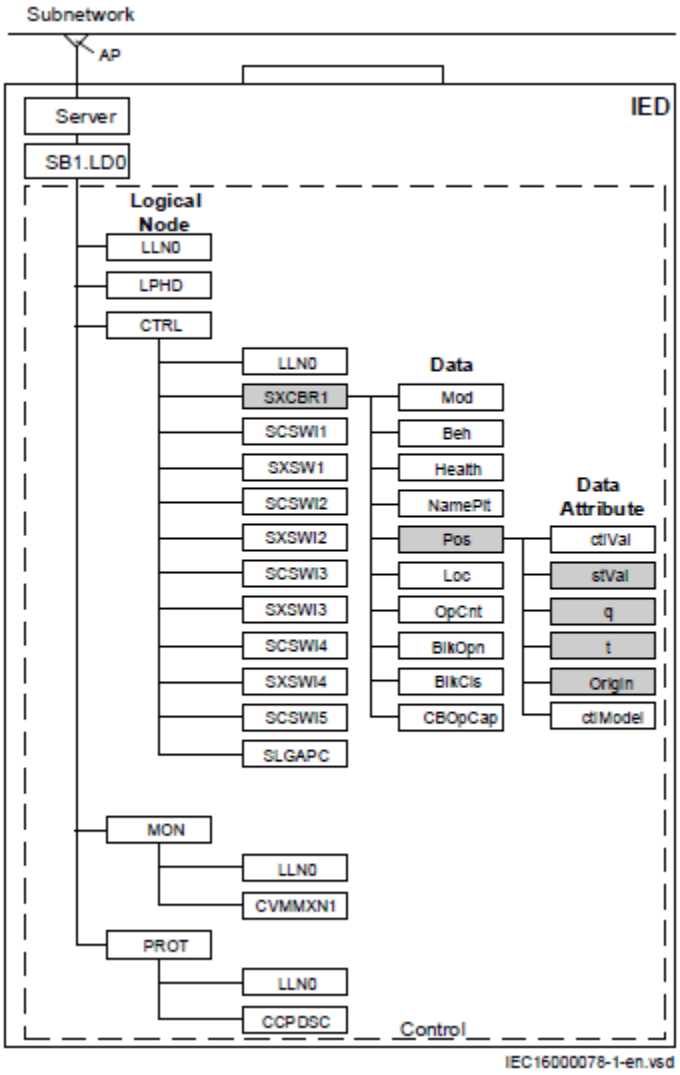

Figure 4-4
Example logical node diagram showing SCBR and related attributes

Table 4-8
Common Class Types Found in SCBR Class

Class Type	Name	Description
Status	SPS	Single Point Status
	INS	Integer Status
	ENS	Enumerated Status
	ACT	Protection Activation
Measurands	MV	Measured Value
	BCR	Binary Counter Reading
Controls	INC	Controllable Integer Status
Settings	ASG	Analogue Setting
	ING	Integer Status Setting

Table 4-9
SCBR Class Data Objects (Mandatory and Optional)

SCBR Class			
Data object name	**Common data class**	**Explanation**	**M/O/C**
SCBR		Circuit Breaker Supervision	
Data objects			
Status information			
ColOpn	SPS	Open command of trip coil	M
AbrAlm	SPS	Contact abrasion alarm	O
AbrWrn	SPS	Contact abrasion warning	O
MechHealth	ENS	Mechanical behavior alarm	O
OpTmAlm	SPS	Switch operating time exceeded	O
ColAlm	SPS	Coil alarm	O
OpCntAlm	SPS	Number of operations (modelled in the XCBR) has exceeded the alarm level for number of operations	O
OpCntWrn	SPS	Number of operations (modelled in the XCBR) exceeds the warning limit	O
OpTmWrn	SPS	Warning when operation time reaches the warning level	O
OpTmh	INS	Time since installation or last maintenance in hours	O
MotFail	SPS	Motor or pump failure	O
Measured and metered values			
AccAbr	MV	Cumulated abrasion	O
SwA	MV	Current that was interrupted during last open operation	O
ActAbr	MV	Abrasion of last open operation	O
AuxSwTmOpn	MV	Auxiliary switches timing Open	O
AuxSwTmCls	MV	Auxiliary switches timing Close	O
RctTmOpn	MV	Reaction time measurement Open	O
RctTmCls	MV	Reaction time measurement	O
OpSpdOpn	MV	Operation speed Open	O
OpSpdCls	MV	Operation speed Close	O
OpTmOpn	MV	Operation time Open	O
OpTmCls	MV	Operation time Close	O
Stk	MV	Contact Stroke	O
OvStkOpn	MV	Overstroke Open	O

Table 4-10 (continued)
SCBR Class data objects (mandatory and optional)

SCBR Class			
Data object name	**Common data class**	**Explanation**	**M/O/C**
Data objects			
Measured and metered values			
OvStkCls	MV	Overstroke Close	O
ColA	MV	Coil current	O
Tmp	MV	Temperature e.g., inside drive mechanism	O
ColV	MV	Control voltage of coil	O
AccTmh	MV	Cumulated time of current through trip or reclose coil	O
ArcTm	MV	Arc Duration Time	O
PreArcTm	MV	Pre Arc Duration Time	O
Controls			
OpCntRs	INC	Resettable Operation Counter	O
Settings			
AbrAlmLev	ASG	H_2 alarm set-point	O
AbrWrnLev	ASG	N_2 alarm set-point	O
OpAlmTmh	ING	Total dissolved combustible gases (TDCG) alarm set-point	O
OpWrnTmh	ING	O_2 alarm set-point	O
OpAlmNum	ING	C_2H_2 alarm set-point	O
OpWrnNum	ING	CH_4 alarm set-point	O

Section 5: Circuit Breaker Monitors

Marketplace Vendors Supporting IEC 61850

After conducting a market survey for devices that provide circuit breaker monitoring related activities or supervision, three circuit breaker monitors and relays from three manufacturers were identified. Of the three circuit breaker monitors, two manufacturers provided an IEC 61850 option. The three relay manufacturers provided varying levels of support of the IEC 61850-90-3 SCBR objects.

The vendors and products used for analysis are listed below.

Circuit Breaker Monitors:

1. GE CBWatch3 (formerly Alstom CBWatch3) Modular circuit breaker monitoring solution
   - GE Solutions CB Watch3 User Manual v5 Draft, April 2017 [8]
   - Model Implementation Conformance Statement for the IEC 61850 interface in CBWatch3, Oct 12, 2016 [21]
2. ABB SwitchSync PWC600
   - SwitchSync PWC600 User Manual (Document ID: 1MRK511346), Dec 9, 2016 [9]
   - Switchsync PWC600 IEC 61850 Communication Protocol Manual, (Document ID: 1MRK511269-UEN), Feb 3, 2015 [10]
   - ABB Switchsync PWC600 version 1.0 – IEC 61850 MICS (Model Implementation Conformance Statement), (Document ID: 1MRK511297-WEN) Aug 16, 2013 [22]

Relays:

1. ABB Relion 650 Busbar Protection
   - Relion 650 Series - Busbar protection REB650 Version 2.2; Product guide (Document ID: 1MRK505391-BEN), May 2017 [4]
   - Communication protocol manual, IEC 61850 Edition 2, 650 series Version 2.2 (Document ID: 1MRK511415-UEN), May 2017 [23]
   - Model Implementation Conformance Statement (MICS) for the IEC 61850 Ed2 interface in ABB 670 and 650 series version 2.2. Document ID: 1MRG025306. Approved 12-13-2016. [24]
2. SEL 400 series; 351S, 751
   - SEL-400 Series Relays Instruction Manual, 20170714 [5]
   - Model Implementation Conformance Statement for the IEC 61850 interface in SEL-351S, Feb 20, 2012 [25]
   - Model Implementation Conformance Statement for the IEC 61850 interface in SEL-421, April 24, 2008 [26]
   - Model Implementation Conformance Statement for the IEC 61850 interface in SEL-751, Dec 9, 2014 [27]
   - SEL Application Guide 2011-15, Circuit Breaker Monitoring Using the SEL-421 Relay, May 28 2014 [28]
3. GE UR Family Relays
   - UR Family Communications Guide, Product version: 7.6x (Part number 1601-0401-AF1, June 2017) [3]
   - C60 Breaker Protection System Instruction Manual, Product version 7.6x, (Part number 1601-0100-AF1, June 2017) [6]

Marketplace Vendors not Currently Supporting IEC 61850

Circuit Breaker Monitors

- BCM-200E (IPOB) Breaker Condition Monitor (Document ID: 40-8433-03), 2008 [11]

The Qualitrol BCM-200E monitor has been in the market for many years. This unit only supports serial communications via RS-232 and RS-485 connections and does not have an Ethernet port. Subsequently, it does not support IEC 61850. It is anticipated that future products will have Ethernet and may support communications via IEC 61850.

The outputs provided by this monitor can be used by a “master station” software, which can then be used by an asset management system. The list of monitored information and calculated data produced by the BCM-200E are listed in Table 5-3. These alarms could be mapped to IEC 61850-90-3 SCBR logical node in the future.

Conformance of Vendor Implementation to 61850-90-3 SCBR Class

All Mandatory, Optional and Extension objects from the "SCBR" Object Class were mapped from the vendor documentation to the final version of the 61850-90-3 standard. Key observations are presented below, followed by the detailed results of this comparison in Table 5-2.

Since the final version of the standard was only released on May 12, 2016, it was anticipated that there would be differences found during this analysis.

Table 5-1
IEC 61850-90-3 Objects Supported by Various Monitoring Platforms

	Standard: IEC 61850-90-3	**CBWatch**	**ABB PWC600**	**REB650**	**SEL-351S**	**GE UR Relay**
Mandatory objects	**1**	1	1	1	1	1
Optional objects	**37**	15	14	4	4	5
Extension objects	**N/A**	8	4	17	1	7
Total objects	**38**	24	19	22	6	13

Observations:

1. Some of the vendor documentation reviewed came out prior to the final publication of 61850-90-3 Technical Report. Therefore, vendors who were attempting to comply with the standard during the development period likely faced one of two situations:
   - Data object names utilized may have come from draft versions of the standard, but were slightly modified in the final version.
   - A lack of objects fitting a specific need in early drafts may have led vendors to create their own custom "Extensions". In some instances, similar objects may have been added later and show up in the standard as "Optional".
2. There is only one "Mandatory" data object in the SCBR class. This is *ColOpn*, which represents "Open command of trip coil". All of the vendors implemented this object. There are 37 "Optional" data objects in the standard.
3. For the dedicated circuit breaker monitors, CBWatch3 and ABB PWC600 supported more optional objects in SCBR than the protective relays, with 15 and 14 optional objects, and 24 and 19 total objects respectively.
4. For the protective relays, the REB650 supported 22 total objects, GE UR relays supported 13 and the SEL 351S relay supported 6.

Status points:

- None of the vendors supported the optional objects OpTmWrn, MotFail and OpTmhINS.

Measured Values:

- None of the vendors supported the optional objects AccAbr, ActAbr, Stk, ColA, ColV, AccTmh, ArcTm and PreArcTm.

Controls:

- Only the CBWatch3 supported the single optional control OpCntRs in the standard, while the PWC600 and REB650 added some extension objects under Controls.

Settings:

- Only REB650 implemented OpAlmNum and OpWrnNum objects in settings. None of the vendors implemented the optional objects AbrAlmLev, AbrWrnLev, OpAlmTmh and OpWrnTmh.

Table 5-2
Data Objects for the Circuit Breaker Supervision (SCBR) Logical Node

SCBR Class								
Data object name	**Common data class**	**Explanation**	**M/ O/C**	**CBWatch3**	**ABB PWC600**	**REB650**	**SEL-351S**	**GE UR Series**
LNName		The name shall be composed of the class name, the LN-Prefix and LN-Instance-ID according to IEC 61850-7-2, Clause 22.						
SCBR		Circuit Breaker Supervision		SCBR	SCBR	SCBR	SCBR	SCBR
Data objects								
Status information								
ColOpn	SPS	Open command of trip coil	M	M	M	M	M	M
ColAlm	SPS	Coil alarm	O	O				
AbrAlm	SPS	Contact abrasion alarm	O	O				O
AbrWrn	SPS	Contact abrasion warning	O	O				
MechHealth	ENS	Mechanical behavior alarm	O	O	O			
OpTmAlm	SPS	Switch operating time exceeded	O		O		E	
OpTmWrn	SPS	Warning when operation time reaches the warning level	O					
OpCnt	INS	Operational counter	–			E	E	
OpCntLO	SPS	Number of CB operations exceeds lockout limit	–			E		
OpCntAlm	SPS	Number of operations (modelled in the XCBR) has exceeded the alarm level for number of operations (OpAlmNum)	O		O	O		
OpCntWrn	SPS	Number of operations (modelled in the XCBR) exceeds the warning limit (OpWrnNum)	O		O	O		

Table 5-2 (continued)
Data Objects for the Circuit Breaker Supervision (SCBR) Logical Node

SCBR Class								
Data object name	**Common data class**	**Explanation**	**M/ O/C**	**CBWatch3**	**ABB PWC600**	**REB650**	**SEL-351S**	**GE UR Series**
Data objects								
Status information								
InaTmdCntINS	INS	Number of Days CB has been inactive	–			E		
LonTmAlmSPS	SPS	CB not operated for long time	–			E		
OpTmhINS	INS	Time since installation or last maintenance in hours	O					
MotFail	SPS	Motor or pump failure	O					
MaxRkRiAlm	SPS	Maximum number of reignitions or re-strikes detected [Re-strike count alarm output]	–		E			
UnstOpChr	SPS	Unstable CB operating characteristics, as determined from detected switching instants of recent operation [Indication of an unstable operation detected]	–		E			
CntrPos	SPS	Contradicting mechanical and electrical CB position indications [Indication of contradicting electrical and mechanical CB position indications]	–		E			
ColAAlm	SPS	Coil Actuation charge alarm	–	E				
SprChaAlm	SPS	Spring Charging time exceeds threshold setting	–			E		
AccmPwrAlm	SPS	Accumulated energy exceeds Alarm setting	–			E		
AccmPwrLO	SPS	Accumulated energy exceeds lockout setting	–			E		
CBLifeAlm	SPS	Life of CB below Alarm level	–			E		
RmnNumOp	INS	Remaining Life of CB, in number of operations	–			E		
OpnAlm	SPS	Open Alarm	–			E		

Table 5-2 (continued)
Data Objects for the Circuit Breaker Supervision (SCBR) Logical Node

SCBR Class								
Data object name	**Common data class**	**Explanation**	**M/ O/C**	**CBWatch3**	**ABB PWC600**	**REB650**	**SEL-351S**	**GE UR Series**
Data objects								
Status information								
ClsAlm	SPS	Close Alarm	–			E		
Dpo	SPS	The DPO (dropout) operand. Inverse of Str, Op, or Pkp.	–					E
IntrAlm	SPS	Indicates that the current exceeded the maximum interrupting current rating during the last interruption event.	–					E
IntrAlmDpo	SPS	Inverse of IntrAlm.	–					E
BkrOpnPl	ACT	Indicates open pole condition is detected in phase A, B, or C based on the breaker auxiliary contacts.	–					E
BlkPhDis	SPS	Indicates blocking signal for neutral, ground, or negative sequence overcurrent elements.	–					E
PlOpn	ACT	Open pole detector is operated.	–					E
RemUnA	SPS	Indicates remote open pole condition is detected in phase A, B, or C.	–					E
UnA1	SPS	Undercurrent pickup. This operand operates when an open pole condition is detected due to undercurrent in phase A, B, or C.	–					E

Table 5-2 (continued)
Data Objects for the Circuit Breaker Supervision (SCBR) Logical Node

SCBR Class								
Data object name	**Common data class**	**Explanation**	**M/ O/C**	**CBWatch3**	**ABB PWC600**	**REB650**	**SEL-351S**	**GE UR Series**
Measured and metered values								
AccAbr	MV	Cumulated abrasion	O					
AccAbr	MV	Cumulated abrasion	O					O
AbrPrt	MV	Abrasion (in %) of parts subject to wear [Calculated or measured wear (e.g., of main contact), where 0 % corresponds to new condition	–				E	
SwA	MV	Current that was interrupted during last open operation	O	O	O			O
MaxIntrA	MV	Indicates Breaker Arcing Current per phase.	–					E
ActAbr	MV	Abrasion of last open operation	O					
AuxSwTmOpn	MV	Auxiliary switches timing Open	O		O			
AuxSwTmCls	MV	Auxiliary switches timing Close	O		O			
RctTmOpn	MV	Reaction time measurement Open	O	O	O			O
RctTmCls	MV	Reaction time measurement Close	O	O	O			
OpSpdOpn	MV	Operation speed Open	O	O	O			
OpSpdCls	MV	Operation speed Close	O	O	O			
OpTmOpn	MV	Operation time Open	O	O	O		O	O
OpTmCls	MV	Operation time Close	O	O	O		O	
Stk	MV	Contact Stroke	O					
OvStkOpn	MV	Overstroke Open	O	O				
OvStkCls	MV	Overstroke Close	O	O				

Table 5-2 (continued)
Data Objects for the Circuit Breaker Supervision (SCBR) Logical Node

SCBR Class								
Data object name	**Common data class**	**Explanation**	**M/ O/C**	**CBWatch3**	**ABB PWC600**	**REB650**	**SEL-351S**	**GE UR Series**
Measured and metered values								
ColA	MV	Coil current	O					
Tmp	MV	Temperature e.g., inside drive mechanism	O	O	O			
TmpOpn	MV	Temperature during last opening operation	–	E				
TmpCls	MV	Temperature during last closing operation	–	E				
ColV	MV	Control voltage of coil	O					
OpnColV	MV	Current voltage for opening coil	–	E				
ClsColV	MV	Current voltage for closing coil	–	E				
ColVOpn	MV	Coil voltage during last opening operation	–	E				
ColVCls	MV	Coil voltage during last closing operation	–	E				
ColAAlm	MV	Overcurrent alarm on coils	–	E				
AccmAPwr	MV	Accumulated currents power	–			E		
TmsSprCha	MV	Charging Time of the CB Spring, in seconds	–			E		
AccTmh	BCR	Cumulated time of current through trip or reclose coil	O					
ArcTm	MV	Arc Duration Time	O					
PreArcTm	MV	Pre Arc Duration Time	O					

Table 5-2 (continued)
Data Objects for the Circuit Breaker Supervision(SCBR) Logical Node

SCBR Class SCBR Class								
Data object name	**Common data class**	**Explanation**	**M/O/C**	**CBWatch3**	**ABB PWC600**	**REB650**	**SEL-351S**	**GE UR Series**
Controls								
OpCntRs	INC	Resettable Operation Counter	O	O				
RsUnst	SPC	Reset input to exit from CB unstable state	–		E			
RsAccmAPwr	SPC	Reset input to exit from CB unstable state	–			E		
RsRmnNumOp	SPC	Reset Energy	–			E		
RsSprChaTm	SPC	Reset of CB remaining life	–			E		
RsTrvTm	SPC	Reset spring charge time and related alarms	–			E		
Settings								
AbrAlmLev	ASG	Abrasion sum threshold for alarm state	O					
AbrWrnLev	ASG	Abrasion sum threshold for warning state	O					
OpAlmTmh	ING	Alarm level for operation time in hours	O					
OpWrnTmh	ING	Warning level for operation time in hours	O					
OpAlmNum	ING	Alarm level for number of operations	O			O		
OpWrnNum	ING	Warning level for number of operations	O			O		

Table 5-3
Alarms Listed in Log and Operate Breaker Condition Relay for the Qualitrol BCM-200E

Alarm	Description
2306	Incorrect event mode detected (52a and 52b auxiliary contacts not connected properly to BCM)
2311	Re-strike detected (Flashover during a Trip Operation after Main & Arcing contacts separated)
2312	No Breaker Operation (no aux contact change detected)
2315	SF6 Alarm (SF6 gas leaking, No SF6 gas)
2316	SF6 history buffer not full (Days to Lockout alarm notification not functional until buffer is full)
2320	Op1 Abs. operational count limit exceeded
2336	Op1 Abs. phase A i2t limit exceeded (First breaker operation whether it be a Trip or Close)
2352	Op1 Abs. phase B i2t limit exceeded (First breaker operation whether it be a Trip or Close)
2368	Op1 Abs. phase C i2t limit exceeded (First breaker operation whether it be a Trip or Close)
2384	Op1 Abs. coil area limit exceeded (First breaker operation whether it be a Trip or Close)
2400	Op1 Abs. coil time limit exceeded (First breaker operation whether it be a Trip or Close)
2416	Op1 Abs. peak coil current limit exceeded (First breaker operation whether it be a Trip or Close)
2432	Abs. battery ripple limit exceeded (Absolute Maximum battery ripple allowance exceeded)
2448	Abs. battery high volts limit exceeded
2464	Abs. battery low volts limit exceeded
2480	Abs. battery volt drop limit exceeded
2496	Op1 Abs. breaker response time limit exceeded
2512	Op1 Abs. breaker operate time limit exceeded (First breaker operation whether it be a Trip or Close)
2528	Abs. Motor Run time limit exceeded
2560	Op1 Op. coil area limit exceeded (First breaker operation whether it be a Trip or Close)
2576	Op1 Op. coil time limit exceeded (First breaker operation whether it be a Trip or Close)
2592	Op1 Op. peak coil current limit exceeded (First breaker operation whether it be a Trip or Close)
2624	Op1 Op. battery high volts limit exceeded (First breaker operation whether it be a Trip or Close)
2640	Op1 Op. battery low volts limit exceeded (First breaker operation whether it be a Trip or Close)
2672	Op1 Op. breaker response time limit exceeded (First breaker oper. whether it be a Trip or Close)
2688	Op1 Op. breaker operate time limit exceeded (First breaker operation whether it be a Trip or Close)
2816	Op2 Abs. coil area limit exceeded (2nd breaker oper. of multiple ops whether it be a Trip or Close)
2832	Op2 Abs. coil time limit exceeded (2nd breaker oper. of multiple ops whether it be a Trip or Close)
2848	Op2 Abs. peak coil current limit exceeded (2nd Bkr op of multiple ops whether it be a Trip or Close)
2864	Op2 Abs. breaker response time limit exceeded (Same explanation as previous Op2 Alarm 2848)
2880	Op2 Abs. breaker operate time limit exceeded (Same explanation as previous Op2 Alarm 2848)
2944	Op2 Op. coil area limit exceeded (2nd breaker oper. of multiple ops whether it be a Trip or Close)

Table 5-3 (continued)
Alarms Listed in Log and Operate Breaker Condition Relay for the Qualitrol BCM-200E

Alarm	Description
2960	Op2 Op. coil time limit exceeded (2nd breaker oper. of multiple ops whether it be a Trip or Close)
2976	Op2 Op. peak coil current limit exceeded (Same explanation as previous Op2 Alarm 2848)
2992	Op2 Op. breaker response time limit exceeded (Same explanation as previous Op2 Alarm 2848)
3008	Op2 Op. breaker operate time limit exceeded (Same explanation as previous Op2 Alarm 2848)
3072	Op3 Abs. coil area limit exceeded (3rd breaker oper. of multiple ops whether it be a Trip or Close)
3088	Op3 Abs. coil time limit exceeded (3rd breaker oper. of multiple ops whether it be a Trip or Close)
3104	Op3 Abs. peak coil current limit exceeded (Same explanation as previous Op3 Alarm 3072)
3120	Op3 Abs. breaker response time limit exceeded (Same explanation as previous Op3 Alarm 3072)
3136	Op3 Abs. breaker operate time limit exceeded (Same explanation as previous Op3 Alarm 3072)
3200	Op3 Op. coil area limit exceeded (3rd breaker oper. of multiple ops whether it be a Trip or Close)
3216	Op3 Op. coil time limit exceeded (3rd breaker oper. of multiple ops whether it be a Trip or Close)
3232	Op3 Op. peak coil current limit exceeded (Same explanation as previous Op3 Alarm 3072)
3248	Op3 Op. breaker response time limit exceeded (Same explanation as previous Op3 Alarm 3072)
3264	Op3 Op. breaker operate time limit exceeded (Same explanation as previous Op3 Alarm 3072)
3344	Abs. Phase R operation count exceeded
3345	Abs. Phase S operation count exceeded
3346	Abs. Phase T operation count exceeded
3347	Abs. Phase R i2t duty limit exceeded
3348	Abs. Phase S i2t duty limit exceeded
3349	Abs. Phase T i2t duty limit exceeded
3350	Abs. Phase R Op1 breaker response time limit exceeded
3351	Abs. Phase R Op2 breaker response time limit exceeded
3352	Abs. Phase R Op3 breaker response time limit exceeded
3353	Abs. Phase S Op1 breaker response time limit exceeded
3354	Abs. Phase S Op2 breaker response time limit exceeded
3355	Abs. Phase S Op3 breaker response time limit exceeded
3356	Abs. Phase T Op1 breaker response time limit exceeded
3357	Abs. Phase T Op2 breaker response time limit exceeded
3358	Abs. Phase T Op3 breaker response time limit exceeded
3359	Abs. Phase R Op2 breaker operate time limit exceeded
3360	Abs. Phase R Op3 breaker operate time limit exceeded
3361	Abs. Phase S Op1 breaker operate time limit exceeded
3362	Abs. Phase S Op2 breaker operate time limit exceeded

Table 5-3 (continued)
Alarms Listed in Log and Operate Breaker Condition Relay for the Qualitrol BCM-200E

Alarm	Description
3363	Abs. Phase S Op3 breaker operate time limit exceeded
3364	Abs. Phase T Op1 breaker operate time limit exceeded
3365	Abs. Phase T Op2 breaker operate time limit exceeded
3366	Abs. Phase T Op3 breaker operate time limit exceeded
3367	Abs. Phase T Op3 breaker operate time limit exceeded
3368	Abs. Phase R Trip coil area limit exceeded
3369	Abs. Phase S Trip coil area limit exceeded
3370	Abs. Phase T Trip coil area limit exceeded
3371	Abs. Phase R Close coil area limit exceeded
3372	Abs. Phase S Close coil area limit exceeded
3373	Abs. Phase T Close coil area limit exceeded
3374	Abs. Phase R Backup Trip coil area limit exceeded
3375	Abs. Phase S Backup Trip coil area limit exceeded
3376	Abs. Phase T Backup Trip coil area limit exceeded
3377	Abs. Phase R Trip coil time limit exceeded
3378	Abs. Phase S Trip coil time limit exceeded
3379	Abs. Phase T Trip coil time limit exceeded
3380	Abs. Phase R Close coil time limit exceeded
3381	Abs. Phase S Close coil time limit exceeded
3382	Abs. Phase T Close coil time limit exceeded
3383	Abs. Phase R Backup Trip coil time limit exceeded
3384	Abs. Phase S Backup Trip coil time limit exceeded
3385	Abs. Phase T Backup Trip coil time limit exceeded
3386	Abs. Phase R Trip coil peak limit exceeded
3387	Abs. Phase S Trip coil peak limit exceeded
3388	Abs. Phase T Trip coil peak limit exceeded
3389	Abs. Phase R Close coil peak limit exceeded
3390	Abs. Phase S Close coil peak limit exceeded
3391	Abs. Phase T Close coil peak limit exceeded
3392	Abs. Phase R Backup Trip coil peak limit exceeded
3393	Abs. Phase S Backup Trip coil peak limit exceeded
3394	Abs. Phase T Backup Trip coil peak limit exceeded
3395	Abs. Phase R Op1 Stroke limit exceeded (1st op of multiple breaker operations - Trip or Close)

Table 5-3 (continued)
Alarms Listed in Log and Operate Breaker Condition Relay for the Qualitrol BCM-200E

Alarm	Description
3396	Abs. Phase R Op2 Stroke limit exceeded (2nd op of multiple breaker operations - Trip or Close)
3397	Abs. Phase R Op3 Stroke limit exceeded (3rd op of multiple breaker operations - Trip or Close)
3398	Abs. Phase S Op1 Stroke limit exceeded (1st op of multiple breaker operations - Trip or Close)
3399	Abs. Phase S Op2 Stroke limit exceeded (2nd op of multiple breaker operations - Trip or Close)
3400	Abs. Phase S Op3 Stroke limit exceeded (3rd op of multiple breaker operations - Trip or Close)
3401	Abs. Phase T Op1 Stroke limit exceeded (1st op of multiple breaker operations - Trip or Close)
3402	Abs. Phase T Op2 Stroke limit exceeded (2nd op of multiple breaker operations - Trip or Close)
3403	Abs. Phase T Op3 Stroke limit exceeded (3rd op of multiple breaker operations - Trip or Close)
3404	Abs. Phase R Op1 Velocity limit exceeded (1st op of multiple breaker operations - Trip or Close)
3405	Abs. Phase R Op2 Velocity limit exceeded (2nd op of multiple breaker operations - Trip or Close)
3406	Abs. Phase R Op3 Velocity limit exceeded (3rd op of multiple breaker operations - Trip or Close)
3407	Abs. Phase S Op1 Velocity limit exceeded (1st op of multiple breaker operations - Trip or Close)
3408	Abs. Phase S Op2 Velocity limit exceeded (2nd op of multiple breaker operations - Trip or Close)
3409	Abs. Phase S Op3 Velocity limit exceeded (3rd op of multiple breaker operations - Trip or Close)
3410	Abs. Phase T Op1 Velocity limit exceeded (1st op of multiple breaker operations - Trip or Close)
3411	Abs. Phase T Op2 Velocity limit exceeded (2nd op of multiple breaker operations - Trip or Close)
3412	Abs. Phase T Op3 Velocity limit exceeded (3rd op of multiple breaker operations - Trip or Close)
3413	Abs. Phase R Op1 OverTravel limit exceeded (1st op of multiple breaker operations - Trip or Close)
3414	Abs. Phase R Op2 OverTravel limit exceeded (2nd op of multiple breaker operations - Trip or Close)
3415	Abs. Phase R Op3 OverTravel limit exceeded (3rd op of multiple breaker operations - Trip or Close)
3416	Abs. Phase S Op1 OverTravel limit exceeded (1st op of multiple breaker operations - Trip or Close)
3417	Abs. Phase S Op2 OverTravel limit exceeded(2nd op of multiple breaker operations - Trip or Close)
3418	Abs. Phase S Op3 OverTravel limit exceeded (3rd op of multiple breaker operations - Trip or Close)
3419	Abs. Phase T Op1 OverTravel limit exceeded (1st op of multiple breaker operations - Trip or Close)
3420	Abs. Phase T Op2 OverTravel limit exceeded (2nd op of multiple breaker operations - Trip or Close)
3421	Abs. Phase T Op3 OverTravel limit exceeded (3rd op of multiple breaker operations - Trip or Close)
3422	Abs. Phase R Op1 Rebound travel limit exceeded
3423	Abs. Phase R Op2 Rebound travel limit exceeded
3424	Abs. Phase R Op3 Rebound travel limit exceeded
3425	Abs. Phase S Op1 Rebound travel limit exceeded
3426	Abs. Phase S Op2 Rebound travel limit exceeded
3427	Abs. Phase S Op3 Rebound travel limit exceeded
3428	Abs. Phase T Op1 Rebound travel limit exceeded

Table 5-3 (continued)
Alarms Listed in Log and Operate Breaker Condition Relay for the Qualitrol BCM-200E

Alarm	Description
3429	Abs. Phase T Op2 Rebound travel limit exceeded
3430	Abs. Phase T Op3 Rebound travel limit exceeded
3600	Op. Phase R Trip coil area limit exceeded
3601	Op. Phase S Trip coil area limit exceeded
3602	Op. Phase T Trip coil area limit exceeded
3603	Op. Phase R Close coil area limit exceeded
3604	Op. Phase S Close coil area limit exceeded
3605	Op. Phase T Close coil area limit exceeded
3606	Op. Phase R Backup Trip coil area limit exceeded
3607	Op. Phase S Backup Trip coil area limit exceeded
3608	Op. Phase T Backup Trip coil area limit exceeded
3609	Op. Phase R Trip coil time limit exceeded
3610	Op. Phase S Trip coil time limit exceeded
3611	Op. Phase T Trip coil time limit exceeded
3612	Op. Phase R Close coil time limit exceeded
3613	Op. Phase S Close coil time limit exceeded
3614	Op. Phase T Close coil time limit exceeded
3615	Op. Phase R Backup Trip coil time limit exceeded
3616	Op. Phase S Backup Trip coil time limit exceeded
3617	Op. Phase T Backup Trip coil time limit exceeded
3618	Op. Phase R Trip coil peak limit exceeded
3619	Op. Phase S Trip coil peak limit exceeded
3620	Op. Phase T Trip coil peak limit exceeded
3621	Op. Phase R Close coil peak limit exceeded
3622	Op. Phase S Close coil peak limit exceeded
3623	Op. Phase T Close coil peak limit exceeded
3624	Op. Phase R Backup Trip coil peak limit exceeded
3625	Op. Phase S Backup Trip coil peak limit exceeded
3626	Op. Phase T Backup Trip coil peak limit exceeded
3627	Op. Phase R Op1 response time limit exceeded (1st op multiple breaker operations - Trip or Close)
3628	Op. Phase R Op2 response time limit exceeded (2nd op multiple breaker operations - Trip or Close)
3629	Op. Phase R Op3 response time limit exceeded (3rd op multiple breaker operations - Trip or Close)
3630	Op. Phase S Op1 response time limit exceeded (1st op multiple breaker operations - Trip or Close)

Table 5-3 (continued)
Alarms Listed in Log and Operate Breaker Condition Relay for the Qualitrol BCM-200E

Alarm	Description
3631	Op. Phase S Op2 response time limit exceeded (2nd op multiple breaker operations - Trip or Close)
3632	Op. Phase S Op3 response time limit exceeded (3rd op multiple breaker operations - Trip or Close)
3633	Op. Phase T Op1 response time limit exceeded (1st op multiple breaker operations - Trip or Close)
3634	Op. Phase T Op2 response time limit exceeded (2nd op multiple breaker operations - Trip or Close)
3635	Op. Phase T Op3 response time limit exceeded (3rd op multiple breaker operations - Trip or Close)
3636	Op. Phase R Op1 operate time limit exceeded (1st op multiple breaker operations - Trip or Close)
3637	Op. Phase R Op2 operate time limit exceeded (2nd op multiple breaker operations - Trip or Close)
3638	Op. Phase R Op3 operate time limit exceeded (3rd op multiple breaker operations - Trip or Close)
3639	Op. Phase S Op1 operate time limit exceeded (1st op multiple breaker operations - Trip or Close)
3640	Op. Phase S Op2 operate time limit exceeded (2nd op multiple breaker operations - Trip or Close)
3641	Op. Phase S Op3 operate time limit exceeded (3rd op multiple breaker operations - Trip or Close)
3642	Op. Phase T Op1 operate time limit exceeded (1st op multiple breaker operations - Trip or Close)
3643	Op. Phase T Op2 operate time limit exceeded (2nd op multiple breaker operations - Trip or Close)
3644	Op. Phase T Op3 operate time limit exceeded (3rd op multiple breaker operations - Trip or Close)
3645	Op. Phase R Op1 stroke limit exceeded (1st op multiple breaker operations - Trip or Close)
3646	Op. Phase R Op2 stroke limit exceeded (2nd op multiple breaker operations - Trip or Close)
3647	Op. Phase R Op3 stroke limit exceeded (3rd op multiple breaker operations - Trip or Close)
3648	Op. Phase S Op1 stroke limit exceeded (1st op multiple breaker operations - Trip or Close)
3649	Op. Phase S Op2 stroke limit exceeded (2nd op multiple breaker operations - Trip or Close)
3650	Op. Phase S Op3 stroke limit exceeded (3rd op multiple breaker operations - Trip or Close)
3651	Op. Phase T Op1 stroke limit exceeded (1st op multiple breaker operations - Trip or Close)
3652	Op. Phase T Op2 stroke limit exceeded (2nd op multiple breaker operations - Trip or Close)
3653	Op. Phase T Op3 stroke limit exceeded (3rd op multiple breaker operations - Trip or Close)
3654	Op. Phase R Op1 over travel limit exceeded (1st op multiple breaker operations - Trip or Close)
3655	Op. Phase R Op2 over travel limit exceeded (2nd op multiple breaker operations - Trip or Close)
3656	Op. Phase R Op3 over travel limit exceeded (3rd op multiple breaker operations - Trip or Close)
3657	Op. Phase S Op1 over travel limit exceeded (1st op multiple breaker operations - Trip or Close)
3658	Op. Phase S Op2 over travel limit exceeded (2nd op multiple breaker operations - Trip or Close)
3659	Op. Phase S Op3 over travel limit exceeded (3rd op multiple breaker operations - Trip or Close)
3660	Op. Phase T Op1 over travel limit exceeded (1st op multiple breaker operations - Trip or Close)
3661	Op. Phase T Op2 over travel limit exceeded (2nd op multiple breaker operations - Trip or Close)
3662	Op. Phase T Op3 over travel limit exceeded (3rd op multiple breaker operations - Trip or Close)
3663	Op. Phase R Op1 rebound travel limit exceeded (1st op multiple breaker operations - Trip or Close)

Table 5-3 (continued)
Alarms Listed in Log and Operate Breaker Condition Relay for the Qualitrol BCM-200E

Alarm	Description
3664	Op. Phase R Op2 rebound travel limit exceeded(2nd op multiple breaker operations - Trip or Close)
3665	Op. Phase R Op3 rebound travel limit exceeded (3rd op multiple breaker operations - Trip or Close)
3666	Op. Phase S Op1 rebound travel limit exceeded (1st op multiple breaker operations - Trip or Close)
3667	Op. Phase S Op2 rebound travel limit exceeded (2nd op multiple breaker operations - Trip or Close)
3668	Op. Phase S Op3 rebound travel limit exceeded (3rd op multiple breaker operations - Trip or Close)
3669	Op. Phase T Op1 rebound travel limit exceeded (1st op multiple breaker operations - Trip or Close)
3670	Op. Phase T Op2 rebound travel limit exceeded (2nd op multiple breaker operations - Trip or Close)
3671	Op. Phase T Op3 rebound travel limit exceeded (3rd op multiple breaker operations - Trip or Close)
3672	Op. Phase R Op1 velocity limit exceeded (1st op multiple breaker operations - Trip or Close)
3673	Op. Phase R Op2 velocity limit exceeded (2nd op multiple breaker operations - Trip or Close)
3674	Op. Phase R Op3 velocity limit exceeded (3rd op multiple breaker operations - Trip or Close)
3675	Op. Phase S Op1 velocity limit exceeded (1st op multiple breaker operations - Trip or Close)
3676	Op. Phase S Op2 velocity limit exceeded (2nd op multiple breaker operations - Trip or Close)
3677	Op. Phase S Op3 velocity limit exceeded (3rd op multiple breaker operations - Trip or Close)
3678	Op. Phase T Op1 velocity limit exceeded (1st op multiple breaker operations - Trip or Close)
3679	Op. Phase T Op2 velocity limit exceeded (2nd op multiple breaker operations - Trip or Close)
3680	Op. Phase T Op3 velocity limit exceeded (3rd op multiple breaker operations - Trip or Close)

Section 6: Next Steps

Interoperability Tests

The documentation analyzed in this report represents the most up to date information available from the vendors. However, for many of the products, the IEC 61850-90-3 objects deployed in the devices, specifically those relating to Circuit Breaker monitoring, were implemented prior to the publication of the final version of IEC 61850-90-3 Technical Report. Consequently, some of objects have been renamed, or additional objects were added to early drafts of the standard. This creates a situation where custom extensions had to be created. By its very nature, custom extensions do not easily allow for vendor interoperability, rather, it continues towards the path of proprietary implementations.

To close the gaps created by this situation, EPRI intends the following research activities:

- Engage the vendors producing Circuit Breaker monitoring devices and encouraging them to modify their configurations to align with the final 61850-90-3 standard.
- Hold an interoperability test to verify and validate any changes in implementation. It is intended to reduce the overall number of "extension" objects and replace them with "optional" objects from the standard.
- If there is still a need for objects not included in the current version of the standard, then a request for the addition of objects could be made to the standards committee in charge of IEC 61850-90-3.
- Additional research could be performed to examine monitoring devices beyond Transformer Dissolved Gas Analysis (DGA) and Circuit Breaker monitors, and examine compliance of these devices with Logical Nodes in the Part 90-3 standard in addition to SIML and SCBR (respectively).
- Engage the vendors producing Asset Health analysis systems, identify which are utilizing IEC 61850, and develop an interoperability test for the both the "monitor" devices and the "head end" Asset Health systems.

Section 7: Conclusion

With the rise in the use of asset management programs, including transformer monitoring and circuit breaker monitoring, costs can be controlled by leveraging standards to retrieve data from monitors produced by a variety of vendors.

This project examined the requirements for asset condition monitoring from the perspective of standards and communications, guided by a specific use case. The use case considered through this project entailed replacing a single circuit breaker monitor providing asset health monitoring data and communicating through IEC 61850 with a circuit breaker monitor from a different manufacturer. The ideal outcome would have the data collection system function *exactly* the same before and after the device change with zero configuration changes required. While zero changes are the goal, it should be considered progress if only minor configuration changes are needed.

It is reasonable to expect that this level of "perfect interchangeability" is not to be assumed. Therefore, this use case should be able to identify specific differences in the implementations of IEC 61850 by each manufacturer and indicate any ambiguous sections within the standard.

A gap analysis was performed against the SCBR data objects described in the final version of the IEC 61850-90-3 standard using two dedicated circuit breaker monitoring devices and relays from three manufacturers. The analysis was specifically targeted towards monitors supporting the SCBR logical node.

Since the final version was only released on May 12, 2016, it was anticipated that there would be differences found during this analysis. A list of observations was made regarding compliance, and some gaps were identified. It was noted that there is a certain amount of consistency on the "core" objects. However, the observations also identified a group of objects that appear in the standard but were not implemented by any of the vendors. Lastly, it was noted that custom extensions were created by vendors for objects that do not currently exist in the standard.

It is the intention to continue this work by working closely with the vendors to address these gaps and conduct an interoperability test to demonstrate progress made towards interchangeability. Any remaining gaps after this work should be provided to Technical Committee 57 Working Group 10 for future consideration.

By leveraging the existing object models that are applicable to condition monitoring within the CIM and IEC 61850 standards, utility asset managers can build highly effective asset health programs that enable a utility to manage their financial risk and improve overall electric reliability for their customers.

Section 8: References

1. *High Voltage Circuit Breaker Guidebook Development: 2016 Update.* EPRI, Palo Alto, CA: 2016. 3002007763.
2. EPRI, *Circuit Breaker Condition Monitoring: Using Relays for Breaker Diagnostics.* EPRI, Palo Alto, 2015. 3002005915.
3. GE Multilin Inc., "UR Family Communications Guide, Product version: 7.6x (Part number 1601-0401-AF1, June 2017)," 2017.
4. ABB, "Relion 650 Series - Busbar protection REB650 Version 2.2; Product guide (Document ID: 1MRK505391-BEN), May 2017," 2017.
5. SEL Inc., "SEL-400 Series Relays Instruction Manual, 20170714," 2017.
6. GE Multilin Inc., "C60 Breaker Protection System Instruction Manual, Product version 7.6x, (Part number 1601-0100-AF1, June 2017)," 2017.
7. GE (Alstom), "CBWatch3 product brochure," 2014.
8. GE Solutions, "CB Watch3 User Manual; Circuit Breaker Monitoring System - v5 DRAFT," 2017.
9. ABB, "SwitchSync PWC600 User Manual (Document ID: 1MRK511346), Dec 9, 2016," 2016.
10. ABB, "Switchsync PWC600 IEC 61850 Communication Protocol Manual, (Document ID: 1MRK511269-UEN), Feb 3, 2015," 2015.
11. Qualitrol LLC, "BCM-200E (IPOB) Breaker Condition Monitor (Document ID: 40-8433-03)," 2008.
12. Electric Power Research Institute, *Common Information Model Primer: Second Edition.* EPRI, Palo Alto, 2011.
13. Electric Power Research Institute, *Electric Utility Guidebook on Using IEC Standards for Asset Health Data Management: Harmonizing Common Information Model (CIM) and IEC 61850 Asset Health Data Models.* Palo Alto, CA, 2015. 3002005119.
14. "IEC 61968-4 Ed 2 Annex D," 2014.
15. International Electrotechnical Commission, "IEC 61850-7-4 Communication networks and systems for power utility automation – Part 7-4: Basic communication structure – Compatible logical node classes and data object classes, Edition 2.0," International Electrotechnical Commission, 2010.

16. EPRI, *Standard Based Integration Specification: Common Informtion Model Framework for Asset Health Data Exchange*. EPRI, Palo Alto, 2014. 3002002586.

17. Electric Power Research Institute, *Development and Demonstration of Equipment Health Information for Control Room Operators – Transformers.* EPRI, Palo Alto, CA, 2013. TR-1024941.

18. L. Guise, "Auxiliary Power - Conditioned monitoring - Modeling proposal," IECTC57 > WG10 , Toronto, 2010.

19. International Electrotechnical Commission, "IEC 61850-90-3 DTR Ed. 1," 2014.

20. "IEC TR 61850-90-3:2016 Communication networks and systems for power utility automation - Part 90-3: Using IEC 61850 for condition monitoring diagnosis and analysis," International Electrotechnical Commission, 12 May 2016. [Online]. Available: https://webstore.iec.ch/publication/24777. [Accessed 9 June 2016].

21. UCAIug Testing Sub Committee, "Model Implementation Conformance Statement for the IEC 61850 interface in CBWatch3, Oct 12, 2016," 2016.

22. ABB, "ABB Switchsync PWC600 version 1.0 – IEC 61850 MICS (Model Implementation Conformance Statement), (Document ID: 1MRK511297-WEN) Aug 16, 2013," 2013.

23. ABB, "Communication protocol manual, IEC 61850 Edition 2, 650 series Version 2.2 (Document ID: 1MRK511415-UEN), May 2017," 2017.

24. ABB, "Model Implementation Conformance Statement (MICS) for the IEC 61850 Ed2 interface in ABB 670 and 650 series version 2.2. (Document ID: 1MRG025306)," 2016.

25. SEL Inc., "Model Implementation Conformance Statement for the IEC 61850 interface in SEL-351S, Feb 20, 2012," 2012.

26. SEL Inc., "Model Implementation Conformance Statement for the IEC 61850 interface in SEL-421, April 24, 2008," 2008.

27. SEL Inc, "Model Implementation Conformance Statement for the IEC 61850 interface in SEL-751, Dec 9, 2014," 2014.

28. SEL Inc, "SEL Application Guide 2011-15, Circuit Breaker Monitoring Using the SEL-421 Relay, May 28 2014," 2014.

Export Control Restrictions

Access to and use of EPRI Intellectual Property is granted with the specific understanding and requirement that responsibility for ensuring full compliance with all applicable U.S. and foreign export laws and regulations is being undertaken by you and your company. This includes an obligation to ensure that any individual receiving access hereunder who is not a U.S. citizen or permanent U.S. resident is permitted access under applicable U.S. and foreign export laws and regulations. In the event you are uncertain whether you or your company may lawfully obtain access to this EPRI Intellectual Property, you acknowledge that it is your obligation to consult with your company's legal counsel to determine whether this access is lawful. Although EPRI may make available on a case-by-case basis an informal assessment of the applicable U.S. export classification for specific EPRI Intellectual Property, you and your company acknowledge that this assessment is solely for informational purposes and not for reliance purposes. You and your company acknowledge that it is still the obligation of you and your company to make your own assessment of the applicable U.S. export classification and ensure compliance accordingly. You and your company understand and acknowledge your obligations to make a prompt report to EPRI and the appropriate authorities regarding any access to or use of EPRI Intellectual Property hereunder that may be in violation of applicable U.S. or foreign export laws or regulations.

The Electric Power Research Institute, Inc. (EPRI, www.epri.com) conducts research and development relating to the generation, delivery and use of electricity for the benefit of the public. An independent, nonprofit organization, EPRI brings together its scientists and engineers as well as experts from academia and industry to help address challenges in electricity, including reliability, efficiency, affordability, health, safety and the environment. EPRI members represent 90% of the electric utility revenue in the United States with international participation in 35 countries. EPRI's principal offices and laboratories are located in Palo Alto, Calif.; Charlotte, N.C.; Knoxville, Tenn.; and Lenox, Mass.

Together…Shaping the Future of Electricity

© 2017 Electric Power Research Institute (EPRI), Inc. All rights reserved. Electric Power Research Institute, EPRI, and TOGETHER…SHAPING THE FUTURE OF ELECTRICITY are registered service marks of the Electric Power Research Institute, Inc.

3002009872

Electric Power Research Institute
3420 Hillview Avenue, Palo Alto, California 94304-1338 • PO Box 10412, Palo Alto, California 94303-0813 • USA
800.313.3774 • 650.855.2121 • askepri@epri.com • www.epri.com