EPRI | ELECTRIC POWER RESEARCH INSTITUTE

Condenser In-Leakage Guideline



WARNING:
Please read the Export Control Agreement on the back cover.

Technical Report

Effective December 6, 2006, this report has been made publicly available in accordance with Section 734.3(b)(3) and published in accordance with Section 734.7 of the U.S. Export Administration Regulations. As a result of this publication, this report is subject to only copyright protection and does not require any license agreement from EPRI. This notice supersedes the export control restrictions and any proprietary licensed material notices embedded in the document prior to publication.

PSE
PLANT SUPPORT ENGINEERING

Condenser In-Leakage Guideline

TR-112819

Final Report, January 2000

EPRI Project Manager
T. Eckert

EPRI • 3412 Hillview Avenue, Palo Alto, California 94304 • PO Box 10412, Palo Alto, California 94303 • USA
800.313.3774 • 650.855.2121 • askepri@epri.com • www.epri.com

DISCLAIMER OF WARRANTIES AND LIMITATION OF LIABILITIES

THIS DOCUMENT WAS PREPARED BY THE ORGANIZATION(S) NAMED BELOW AS AN ACCOUNT OF WORK SPONSORED OR COSPONSORED BY THE ELECTRIC POWER RESEARCH INSTITUTE, INC. (EPRI). NEITHER EPRI, ANY MEMBER OF EPRI, ANY COSPONSOR, THE ORGANIZATION(S) BELOW, NOR ANY PERSON ACTING ON BEHALF OF ANY OF THEM:

(A) MAKES ANY WARRANTY OR REPRESENTATION WHATSOEVER, EXPRESS OR IMPLIED, (I) WITH RESPECT TO THE USE OF ANY INFORMATION, APPARATUS, METHOD, PROCESS, OR SIMILAR ITEM DISCLOSED IN THIS DOCUMENT, INCLUDING MERCHANTABILITY AND FITNESS FOR A PARTICULAR PURPOSE, OR (II) THAT SUCH USE DOES NOT INFRINGE ON OR INTERFERE WITH PRIVATELY OWNED RIGHTS, INCLUDING ANY PARTY'S INTELLECTUAL PROPERTY, OR (III) THAT THIS DOCUMENT IS SUITABLE TO ANY PARTICULAR USER'S CIRCUMSTANCE; OR

(B) ASSUMES RESPONSIBILITY FOR ANY DAMAGES OR OTHER LIABILITY WHATSOEVER (INCLUDING ANY CONSEQUENTIAL DAMAGES, EVEN IF EPRI OR ANY EPRI REPRESENTATIVE HAS BEEN ADVISED OF THE POSSIBILITY OF SUCH DAMAGES) RESULTING FROM YOUR SELECTION OR USE OF THIS DOCUMENT OR ANY INFORMATION, APPARATUS, METHOD, PROCESS, OR SIMILAR ITEM DISCLOSED IN THIS DOCUMENT.

ORGANIZATION(S) THAT PREPARED THIS DOCUMENT

Conco Consulting Corporation

ORDERING INFORMATION

Requests for copies of this report should be directed to the EPRI Distribution Center, 207 Coggins Drive, P.O. Box 23205, Pleasant Hill, CA 94523, (800) 313-3774.

Electric Power Research Institute and EPRI are registered service marks of the Electric Power Research Institute, Inc. EPRI. POWERING PROGRESS is a service mark of the Electric Power Research Institute, Inc.

Copyright © 2000 Electric Power Research Institute, Inc. All rights reserved.

CITATIONS

This report was prepared by

Conco Consulting Corporation
532 Jones Street
Verona, Pennsylvania 15147

Principal Author
R. E. Putman

Plant Support Engineering
1300 W.T. Harris Blvd.
Charlotte, NC 28262

This report describes research sponsored by EPRI.

The report is a corporate document that should be cited in the literature in the following manner:

Condenser In-Leakage Guideline, EPRI, Palo Alto, CA: 2000. TR-112819.

REPORT SUMMARY

The *Condenser In-Leakage Guideline* will assist engineers and chemists in identifying and locating air and water in-leakage leaks. It outlines the principles of operation of common condenser air-removal equipment. By keeping the air in-leakage within the capability of the air-removal equipment, condenser back pressure can be maintained. By keeping the water in-leakage as low as possible, condensate chemistry can be maintained.

Background

Air in-leakage into the main condenser is a common problem for both nuclear and fossil plants. Water in-leakage can also be a problem because the quality of the condensate recycled to the boiler or steam generator is affected by the contamination. Over the years, EPRI has sponsored the development of various techniques used to find the sources of air and water leaks. Unfortunately, much of the varied documentation that resulted from this development is now out of print. Thermal performance or condenser system engineers need a single document that brings together a complete set of current information regarding air and water in-leakage. Information regarding the design and operation of steam jet air ejectors and liquid ring vacuum pumps has also been scattered over the years. This report fills the requirement for this type of information.

Information on the design and performance of the systems that provide circulating water to condensers and the associated cooling towers is available elsewhere, so it has not been included here. However, water in-leakage has been included, along with a discussion of cooling water path configurations because they affect the procedures used for water in-leakage detection.

Objective

- To provide guidance that will assist utility engineers and chemists in identifying and locating the cause of air and water in-leakage in the condenser

Approach

The EPRI Plant Support Engineering Program established the Condenser In-Leakage Guideline Task Group, which met three times in 1999. The Task Group reviewed existing EPRI products and other industry documents on condensers and condenser in-leakage. This review, in conjunction with various utility leak-detection programs, was used to develop the guidance in this report.

Key Points

- A condenser primer provides a brief review of the thermodynamic principles involved in the condenser section of a steam power plant thermal cycle. The more common condenser configurations are reviewed, as well as the air removal equipment of steam jet air ejectors and liquid ring vacuum pumps.

- Diagnostics and troubleshooting of air-removal equipment are provided.
- The effects and indicators of water in-leakage are identified, as well as methods for locating and correcting the leaks.
- The effects and indicators of air in-leakage are identified, as well as methods for locating and correcting the leaks.
- Industry consensus was achieved.

TR-112819

Keywords
Steam condensers
Leak testing
Leak detectors
Tracer techniques

ACKNOWLEDGMENTS

The following individuals were ongoing members of Plant Support Engineering's Condenser In-Leakage Guideline Task Group. As such, they have made significant contributions to the development of this report by attending the majority of the task group meetings, reviewing/commenting on various drafts, and writing portions of the document.

Roger B. Gayley, Utility Chair	GPU Nuclear, Inc.
Anthony LaPorte	Conco Systems, Inc.
Richard Putman	Conco Consulting Corp.
Claude Hathcock	Duke Energy Corp.
Victor J. Linnenbom Jr.	Duquesne Light Co.
David J. Garretson	Entergy Operations, Inc.
Fritz Sutor	Expansion Seal Technologies
Phil Lashley	FirstEnergy Corp.
William Kubik	Graham Corp.
Robert J. Bell	Heat Exchanger Systems, Inc.
Joseph Harpster	INTEK, Inc.
Paul Feldmann	Nash International, Inc.
Mark F. Metzger	Nebraska Public Power District
Curt Noel	Ontario Power Generation, Inc.
David J. Piller	PECO Energy Co.
James Mitchell	Plastocor, Inc.
Mike Pintozzi	Schutte & Koerting Co./Ametek, Inc.
James Cuchens	Southern Company Services, Inc.
Chris Lazenby	Southern Company Services, Inc.
Randy R. Jones	Southern Nuclear Co.
William A. Eberly	Tennessee Valley Authority
Paul Bernard	The Nash Engineering Co.
Keith Pearson	TXU Electric
John R. Babinec	Wisconsin Electric Power Co.

CONTENTS

***1* INTRODUCTION 1-1**

1.1 Background 1-1

1.2 Purpose 1-2

1.3 Scope 1-2

1.4 Guideline Overview 1-2

***2* CONDENSER PRIMER 2-1**

2.1 Condenser Overview 2-1

2.1.1 The Rankine Cycle 2-2

2.1.2 Fundamentals of Condenser Heat Transfer Principles 2-5

2.1.2.1 HEI Method of Calculating Condenser Performance 2-6

2.1.2.2 ASME Method of Calculating Condenser Performance 2-7

2.1.2.3 Effect of Air Ingress on Heat Transfer 2-8

2.1.2.4 Effect of Cooling Water Ingress 2-10

2.1.3 Air and Noncondensable Removal 2-11

2.1.4 Hotwell 2-11

2.1.5 Subcooling 2-11

2.1.6 Condenser Configurations 2-13

2.1.6.1 Single Compartment Condensers 2-14

2.1.6.2 Two-Compartment Condensers 2-15

2.1.6.3 Three-Compartment Condensers 2-17

2.2 Shell Side Air-Removal Systems 2-19

2.2.1 Air-Removal Criteria 2-20

2.2.2 Steam Jet Air Ejector Systems 2-22

2.2.3 Liquid Ring Vacuum Pumps 2-28

2.3 Condenser In-Leak Measurement Instrumentation 2-32

2.3.1 Air In-Leakage Measurement 2-33

2.3.1.1 Indicators of Air In-Leakage 2-33

2.3.1.2 Rotameter Flow Rate Measurement 2-34
2.3.2 Vacuum Line Measurement 2-36
2.3.2.1 Features of Multisensor Probe 2-37
2.3.2.2 Benefits from the Use of the Multisensor Probe Monitor 2-39
2.3.3 Dissolved Oxygen 2-41
2.3.3.1 Galvanic Principle 2-41
2.3.3.2 Polarographic Principle 2-41
2.3.3.3 Equilibrium Principle 2-42
2.3.4 Conductivity 2-42
2.3.5 Salinity 2-42
2.3.6 pH 2-43
2.4 References 2-45
2.5 Nomenclature 2-47

***3* SHELL SIDE AIR-REMOVAL EQUIPMENT PERFORMANCE 3-1**
3.1 Steam Jet Air Ejector Performance and Diagnostics 3-1
3.1.1 Historical Background 3-1
3.1.2 Standard HEI Nomenclature for SJAEs and Associated Equipment 3-2
3.1.3 The Mollier Diagram and the Behavior of Steam Jet Air Ejectors 3-3
3.1.4 Steam Jet Air Ejector Performance 3-5
3.1.4.1 Flow of Steam Through Nozzle 3-5
3.1.4.2 Motive/Load Ratio 3-7
3.1.4.3 Compression Ratio 3-8
3.1.4.4 Ejector Efficiency 3-8
3.2 Troubleshooting 3-8
3.2.1 Poor Vacuum 3-9
3.2.1.1 Low Steam Pressure 3-9
3.2.1.2 Superheated Steam 3-9
3.2.1.3 Clogged Nozzle Orifices 3-10
3.2.1.4 Total Condenser Air In-Leakage 3-10
3.2.1.5 Loop Seal Drain Too Short 3-10
3.2.1.6 Excessive Discharge Pressure on Atmospheric Stage 3-10
3.2.1.7 Poor Main Condenser Operation 3-10
3.2.1.8 Leaking Air Inlet Isolation Valves 3-10
3.2.2 Gradual Loss of Vacuum 3-11

3.2.2.1 Nozzle or Diffuser Eroded or Corroded 3-11
3.2.2.2 Improper Operation of Condensate Trap 3-11
3.2.2.3 Clogged Loop Seal Drain Pipe Tube 3-11
3.2.2.4 Leaking SJAE System Condenser Tube 3-11
3.2.2.5 Wet Steam 3-11
3.2.3 Poor Vacuum and/or High Outlet Water Temperature 3-12
3.3 Field Testing 3-12
3.4 Checking the Operation of a Two-Stage Vacuum System 3-12
3.5 Liquid Ring Vacuum Pump System Performance and Diagnostics 3-13
3.5.1 Troubleshooting Flowchart 3-20
3.6 References 3-22

4 IMPACT ON PLANT FEEDWATER CHEMISTRY OF CONDENSER WATER AND AIR INGRESS 4-1
4.1 Air Ingress, Dissolved Oxygen, and Plant Operation 4-1
4.1.1 Feedwater Treatment and Dissolved Oxygen Control 4-2
4.1.2 Hydrazine-Reaction/Decomposition/pH 4-2
4.1.2.1 Oxygen Scavenging and Oxide Conversion 4-3
4.1.2.2 Hydrazine Decomposition 4-3
4.1.2.3 Hydrazine-pH 4-4
4.1.2.4 The Safe Use of Hydrazine 4-4
4.1.2.5 Condensate Polishers 4-4
4.1.2.6 pH Control 4-5
4.1.2.7 Other Chemicals Used for pH Control 4-5
4.1.2.8 Methoxypropylamine 4-5
4.1.2.9 Dimethylamine 4-6
4.1.2.10 Carbohydrazide 4-6
4.1.3 Materials of Construction 4-6
4.1.3.1 Copper Tubed Heat Exchange Equipment 4-7
4.1.3.2 Stainless Tube Heat Exchangers with Titanium Tubed Condensers 4-7
4.1.3.3 Mixed Material Plants 4-8
4.1.4 Drains: Recycled Chemistry 4-8
4.1.5 Blowdown 4-9
4.1.6 Startup Conditions 4-9

4.1.7 Significance of Hydrazine and Dissolved Oxygen Indications at Various Locations in the System 4-10
4.1.7.1 Condensers 4-11
4.1.7.2 Vapor Phase Reaction 4-11
4.2 Effects of Water Ingress in PWRs 4-12
4.2.1 Impurities of Special Concern 4-13
4.2.1.1 Silica 4-13
4.2.1.2 Sodium 4-14
4.2.1.3 Chlorides 4-14
4.2.1.4 Sulfates 4-14
4.2.2 Specific Problems Affecting PWRs Due to Ingress of Contaminants 4-15
4.2.2.1 Denting in Steam Generators 4-15
4.2.2.2 Intergranular Stress Corrosion Cracking 4-15
4.3 Effects of Water In-Leakage in BWRs 4-15
4.3.1 Silica In-Leakage 4-16
4.3.2 Sodium In-Leakage 4-16
4.3.3 Chloride In-Leakage 4-16
4.3.4 Sulfate In-Leakage 4-17
4.4 References 4-17

***5* INDICATORS OF WATER IN-LEAKAGE 5-1**
5.1 Condensate Chemistry Changes Caused by Condenser In-Leakage 5-1
5.1.1 Specific Conductivity 5-2
5.1.2 Cation Conductivity 5-2
5.1.3 Sodium 5-3
5.1.4 Chloride 5-4
5.1.5 Other Chemical Species 5-4
5.1.6 Allowable Limits 5-4
5.2 Typical Plant Response to Leakage 5-4
5.3 References 5-6

***6* METHODS FOR LOCATING WATER IN-LEAKAGE 6-1**
6.1 Introduction and Historical Background 6-1
6.2 Conventional Water In-Leakage Detection Methods 6-2
6.2.1 Smoke 6-2

6.2.2 Thermography 6-2
6.2.3 Ultrasonics 6-3
6.2.4 Plastic Wrap 6-3
6.2.5 Foam 6-4
6.2.6 Water Fill Leak Test 6-4
6.2.7 Rubber Stoppers 6-4
6.2.8 Individual Tube Pressure/Vacuum Testing 6-4
6.3 Eddy Current Testing 6-5
6.3.1 Eddy Current Data Acquisition and Processing Practices 6-6
6.3.1.1 The Planning of Eddy Current Testing 6-6
6.3.1.2 Tube Map 6-7
6.3.1.3 Benchmark Data Set 6-7
6.3.1.4 Data Comparisons and Trending 6-7
6.3.1.5 Maintenance Practices 6-7
6.3.1.6 Figures of Merit 6-8
6.3.1.7 Management Report 6-8
6.4 Tracer Gas Methods 6-8
6.4.1 Historical Background 6-8
6.4.1.1 Successful Application of Helium Technology 6-9
6.4.1.2 Introduction of Sulfur Hexafluoride (SF_6) as a Tracer Gas 6-9
6.4.2 The Implementation of Tracer Gas Leak Detection 6-10
6.4.3 Leak Detection Equipment 6-11
6.4.3.1 Sulfur Hexafluoride (SF_6) Analyzer 6-11
6.4.3.2 Tracer Gas Release Package 6-13
6.4.3.3 Sampling Equipment 6-14
6.4.3.4 Portable System 6-15
6.4.3.5 Permanent Cabinet-Mounted System 6-16
6.4.3.6 Test Shot Equipment 6-16
6.4.3.7 Injection Equipment for Water In-Leakage Detection 6-17
6.4.3.8 Portable or Temporary System 6-17
6.4.3.9 Permanently Installed Injection System 6-18
6.4.3.10 Communication 6-19
6.4.3.11 Strip Chart Recorder 6-20
6.4.3.12 Systems Integration 6-21

6.5 Overview of On-Line Condenser Tube Leak Testing 6-25
6.5.1 Station Leak Rate Detectability 6-30
6.5.2 Derivation of Tracer Gas Injection Rate 6-31
6.6 General Considerations 6-32
6.6.1 Selection of Tracer Gas 6-32
6.6.1.1 Size of Leak 6-32
6.6.1.2 Unit Turbine Power 6-32
6.6.2 Good Practice for Condenser Leak Detection Procedures 6-32
6.7 References 6-35

***7* METHODS FOR CORRECTING WATER IN-LEAKAGE 7-1**
7.1 Tube Plugging 7-2
7.2 Tube Inserts 7-2
7.3 Tube-End Coatings 7-3
7.4 Full-Length Tube Liners 7-3
7.5 Full-Length Tube Coatings 7-4
7.6 Rerolling the Tube-to-Tubesheet Joint 7-5
7.7 Coating of Tubesheets 7-5
7.8 Condenser Retubing 7-6
7.9 Miscellaneous Problems 7-8
7.10 Tubesheet-to-Waterbox Flange Seams 7-8
7.11 References 7-8

***8* EFFECTS OF AIR IN-LEAKAGE 8-1**
8.1 Effects of Air In-Leakage on Thermal Performance 8-1
8.2 Effects of Air In-Leakage on Dissolved Oxygen 8-2
8.2.1 Pressurized Water Reactors 8-5
8.2.2 Boiling Water Reactors 8-6
8.2.3 Fossil-Fired Boilers 8-6
8.2.4 Dissolved Oxygen in Condensate Storage Water 8-7
8.2.5 Other Sources of Dissolved Oxygen 8-8
8.3 Deaeration of Condensate and Makeup Water 8-9
8.3.1 Condensate Reheating 8-10
8.3.2 Condensate Returns 8-10
8.3.3 Condenser Deaeration 8-11

8.3.4 Condensate Steam Sparging 8-13
8.3.5 Hotwell Deaeration 8-13
8.3.6 Drain Return to Condenser 8-14
8.3.7 Makeup Water 8-14
8.3.8 Air-Removal Capability 8-15
8.3.9 Air-Removal Capability and DO 8-16
8.4 Deaeration Outside the Condenser 8-17
8.5 Experience with Deaerating Heaters 8-21
8.6 Control of Oxygen with Hydrazine 8-23
8.7 References 8-24

***9* INDICATORS OF DEGRADED SHELL SIDE PERFORMANCE 9-1**
9.1 Increased Back Pressure 9-1
9.1.1 Limits on Back Pressure Deviation 9-3
9.2 Condensate Subcooling 9-3
9.2.1 Limits on Subcooling 9-5
9.3 Increased Noncondensable or Off-Gas Flow 9-5
9.3.1 Limits on Noncondensable or Off-Gas Flow 9-6
9.4 Dissolved Oxygen 9-6
9.4.1 Limits on Dissolved Oxygen Concentration 9-6
9.5 References 9-6

***10* CAUSES OF DEGRADED SHELL SIDE PERFORMANCE 10-1**
10.1 Excessive Air In-Leakage 10-1
10.1.1 Air Entering Above the Hotwell Level 10-2
10.1.2 Air Entering Below the Hotwell Level 10-3
10.2 Condenser Operating at Off-Design Conditions 10-3
10.3 Inadequate Air-Removal System Performance 10-4
10.3.1 Steam Jet Air Ejection Air-Removal Systems 10-4
10.3.2 Liquid Ring Vacuum Pump Air-Removal Systems 10-5
10.4 Inadequate Air-Removal System Design 10-6
10.5 Inadequate Tube Bundle Design 10-7
10.6 References 10-8

***11* METHODS FOR LOCATING AIR IN-LEAKAGE 11-1**

11.1 Introduction 11-1
11.2 In-Leakage Detection Methods 11-1
11.3 Air In-Leakage Testing 11-2
11.3.1 Application 11-3
11.3.2 Selecting the Tracer Gas To Be Used To Locate Air In-Leakage 11-5
11.3.3 Installation of Test Equipment 11-5
11.3.4 Determination of Test Shot Injection Point 11-5
11.3.5 Test Shot Injection Point Installation 11-6
11.4 Order of Search 11-6
11.4.1 Quantifying Air In-Leakage 11-7
11.4.2 Performing Tube Leakage or Air In-Leakage Inspections When Turbine Is Not Under Power 11-7
11.5 Air In-Leakage Checklist 11-8
11.5.1 Typical Air In-Leakage Items 11-9
11.6 Off-Line Air In-Leakage Testing 11-14
11.6.1 Steam Flow 11-14
11.6.2 Off-Line Testing for Air In-Leakage 11-14
11.7 References 11-15

***12* METHODS OF CORRECTING AIR IN-LEAKAGE 12-1**
12.1 Piping Repair or Replacement 12-1
12.2 Sealants 12-1
12.3 Component Repair and/or Replacement 12-2
12.4 Packing Adjustment 12-2
12.5 References 12-3

A GLOSSARY A-1

B APPENDIX B-1

C ON-LINE WATERBOX TEST PROCEDURE C-1

D AIR IN-LEAKAGE TEST PROCEDURES D-1

E CONDENSER CONFIGURATIONS AND AIR-REMOVAL EQUIPMENT E-1

LIST OF FIGURES

Figure 2-1 Typical Steam Surface Condenser 2-2
Figure 2-2 Rankine Cycle Diagram (Typical Fossil Plant) 2-4
Figure 2-3 Effect of Noncondensables on Nusselt Value 2-10
Figure 2-4 Waterbox Configurations – Single-Pass Condenser 2-14
Figure 2-5 Single Compartment Condenser - Two Pass 2-15
Figure 2-6 Two-Compartment Condensers 2-16
Figure 2-7 Two-Compartment Condensers, Different Back Pressures 2-16
Figure 2-8 Three-Compartment Condenser, Different Back Pressures, External Connections Between Compartments 2-17
Figure 2-9 Three-Compartment Condenser, Different Back Pressures, Continuous Tubes 2-18
Figure 2-10 Three-Compartment Condenser, Different Back Pressures, Waterbox in Center Compartment 2-18
Figure 2-11 Three-Compartment Condenser, Continuous Tubes 2-19
Figure 2-12 Typical Steam Jet Ejector Stage Assembly 2-23
Figure 2-13 Typical Steam Jet Ejector System 2-24
Figure 2-14 Single-Element Steam Jet Air Ejector Configurations 2-25
Figure 2-15 Typical Multi-Element SJAE Configurations 2-26
Figure 2-16 Parallel Trains of Equipment 2-27
Figure 2-17 Operating Principle of Flat Port Type Liquid Ring Vacuum Pump 2-28
Figure 2-18 Conical Port Liquid Ring Vacuum Pump 2-29
Figure 2-19 Operating Principle of a Conical Port Liquid Ring Vacuum Pump 2-30
Figure 2-20 Liquid Ring Vacuum Pump System 2-31
Figure 2-21 Rotameter Type Flow Meter 2-35
Figure 2-22 Multisensor Probe 2-38
Figure 2-23 Multisensor Probe Instrument Schematic 2-41
Figure 3-1 Two-Stage and Six-Stage Ejector Systems 3-2
Figure 3-2 (a) Typical Steam Jet Ejector Stage Assembly, (b) Mollier Diagram for SJAE 3-4
Figure 3-3 Typical Steam Jet Air Ejector Performance Curve 3-7
Figure 3-4 Typical Liquid Ring Vacuum Pump Performance Curve 3-14
Figure 3-5 Plot of Suction Pressure vs. Water Temperature for Various Air Flows 3-15
Figure 3-6 ITD-Based Plots 3-16

Figure 3-7 Suction Pressure-Based Plots 3-17
Figure 3-8 Test Schematic 3-18
Figure 3-9 Principal Elements for Troubleshooting Potential Problems with LRVPs 3-21
Figure 6-1 Gas Analyzer 6-11
Figure 6-2 Schematic Flow Diagram of the Off-Gas Sample Through The Analyzer 6-12
Figure 6-3 Electron Capture Detector 6-13
Figure 6-4 Tracer Gas Release Device 6-14
Figure 6-5 Schematic Diagram of SF_6 Sampling System 6-15
Figure 6-6 Schematic Diagram of Cabinet-Mounted Sample Treatment System 6-16
Figure 6-7 Portable SF_6 Injection System for On-Line Waterbox Testing 6-18
Figure 6-8 Component Configuration of Permanently Installed On-Line Leak Detection System 6-19
Figure 6-9 Permanently Installed Injection Panel 6-20
Figure 6-10 Chart Recording of a Typical Leak Response 6-21
Figure 6-11 Multiple Pumps Arranged Sequentially on a Common Inlet Header 6-22
Figure 6-12 Multiple Pumps Each Connected to Its Own Condenser Air-Removal Area 6-23
Figure 6-13 Multiple Pumps Symmetrically Connected to a Common Inlet Header 6-24
Figure 6-14 Multiple Pumps with Common Inlet and Discharge Headers 6-25
Figure 6-15 Cooling Water System for a Condenser Having a Separate Inlet Feeder for Each Section 6-27
Figure 6-16 Condenser Cooling Water System with Series Configuration and Discrete Condenser Shell Air-Removal 6-28
Figure 6-17 Condenser Cooling Water System with Series Configuration and Nondiscrete Condenser Shell Air-Removal 6-29
Figure 6-18 General Setup for Tube Water Leak Test 6-33
Figure 8-1 Solubility of Oxygen in Water 8-3
Figure 8-2 Combination Unit Deaeration Heater 8-20
Figure 9-1 Condenser Diagnostics Flowchart 9-2
Figure 9-2 Temperature Profiles at Full Load Conditions 9-4
Figure 11-1 Turbine Shaft Gland Seal Housing 11-3
Figure 11-2 Map of LP Turbine #1 11-11
Figure 11-3 Map of LP Turbine #2 11-12
Figure 11-4 Condenser Penetration Map 11-13

LIST OF TABLES

Table 2-1 Examples of a Five-Probe Air In-Leak Measurement System 2-40
Table 2-2 MSP Probe Indications for Various Probe Positions 2-40
Table 3-1 Expected Correlation Between First- and Second-Stage Inlet Pressures 3-13
Table 8-1 Deaerator Selection Criteria 8-18
Table 10-1 Noncondensable Gas Load (Air In-Leakage) Limits..... 10-2
Table E-1 Nuclear Plants with SJAEs E-5
Table E-2 Nuclear Plants with LRVPs E-6
Table E-3 Fossil Plants with SJAEsTable..... E-6
Table E-4 Fossil Plants with LRVPs E-7

1
INTRODUCTION

In response to a number of requests received from performance and maintenance engineers within the nuclear power plant industry, 15 engineers were invited by the Plant Support Engineering Group of EPRI to a meeting in Boston on April 21, 1999, to discuss the need for a new condenser in-leakage guideline manual for the utility industry as a whole.

Existing information was difficult to access and seemed to be scattered throughout the literature. In any case, much of it had become outdated by recent developments in technology, and a real need existed for the available information to be analyzed and assembled into a current document. The meeting stressed that this new document should be useful to engineers presently engaged in maintaining or improving the performance of condensers and their auxiliary systems. In addition, the document should restate the theory of air-removal systems together with their recommended operating and maintenance procedures.

1.1 Background

Air in-leakage into the main condenser is a common problem with both nuclear and fossil plants. The development of various techniques for finding the sources of air leaks has been sponsored by EPRI over the years, most having been developed under the auspices of the Generation and Storage (G&S) Division of EPRI. Unfortunately, many of these documents are now out of print, and there is no single document that places the appropriate set of information in the hands of the thermal performance or condenser system engineer.

Water in-leakage can also be a problem because the quality of the condensate recycled to the steam generator is affected by the contamination. Knowledge concerning the design and operation of steam jet air ejectors and liquid ring vacuum pumps seems to have become dissipated over the years, and there is a need to formally reclaim this information so that it can be accessed and used by this generation of power plant engineers.

Because much current information is available elsewhere on the design and performance of the systems providing circulating water to condensers and the associated cooling towers, the decision was made to exclude these topics from the new guideline. However, water in-leakage has been included, together with a discussion of cooling water path configurations as they affect the procedures used for water in-leakage detection.

1.2 Purpose

The purpose of the *Condenser In-Leakage Guideline* is to provide thermal performance engineers (TPEs), power plant engineers, and plant chemists with guidance for maintaining optimum condenser system integrity and equipment performance. These guidelines do the following:

- Offer a primer on condenser basics and condenser performance diagnostics.
- Assemble the technical guidance contained in existing EPRI reports and other documents into a usable form. Not only are many of these documents out of print, but also they were focused too narrowly on one particular subtopic.
- Capture the "art" of leak detection and reduce it to a set of practical rules.
- Cover the first principles of design, as well as diagnostic and troubleshooting procedures, associated with steam jet air ejectors (SJAEs) and liquid ring type vacuum pumps (LRVPs) used for removing noncondensables from the shell side of condensers.

1.3 Scope

The scope of the *Condenser In-Leakage Guideline* includes the following topics:

- Outline of condenser design principles, deaeration of condensate, and the design of the air-removal systems and other auxiliary equipment
- Description of the problems associated with both air and water ingress into the shell side of a condenser
- Commentary on the various indicators of degraded shell side performance, including a troubleshooting flowchart for off-design condenser performance, as an aid to identifying the potential causes
- Outline of the various methods of locating and correcting air in-leakage
- Summary of the various indicators of water in-leakage and their potential causes
- Description of the various methods of locating and correcting water in-leakage
- Glossary and definitions of the applicable technical terms
- Inclusion of a bibliography
- Outline of water chemistry consequences of water and air in-leakage

1.4 Guideline Overview

Section 2 of this guideline document reviews the basic thermodynamic and heat transfer principles involved in the design of a condenser, the various configurations encountered in practice, the types of equipment to be found in air-removal systems and their configuration, together with some of the instrumentation commonly used to detect the presence of both water and air in-leakage.

Section 3 examines the criteria that affect the performance of the air-removal equipment, consisting of steam jet air ejectors and/or liquid ring vacuum pumps.

Section 4 reviews some of the major consequences resulting from changes in water chemistry and the concerns that originally prompted the assembly of this new guideline.

Sections 5, 6, and 7 are focused on water in-leakage and are concerned, respectively, with the indications of water in-leakage, the location of the sources of water in-leakage, and, once found, various techniques available to correct the problems.

Sections 8 through 12 are focused on air in-leakage. Section 8 briefly discusses the effect of air in-leakage on thermal performance, but the major part of this section explores its effect on the dissolved oxygen (DO) concentration in the condensate; the sources of this oxygen; and the DO limits allowed for PWRs, BWRs, and fossil plants. Section 9 examines the indicators, while Section 10 examines the causes of degraded performance of the shell side of the condenser. Section 11 discusses methods for locating the sources of air in-leakage, and Section 12 introduces some of the methods available to correct these problems.

Five appendices have been included. Appendix A is a glossary of the terms used in the guideline; whereas Appendix B is a list of related EPRI documents.

Appendix C outlines a procedure for testing the waterboxes on-line so that the waterbox or tube bundle associated with a leak can be identified with some certainty prior to shutting the unit down. The source of the leak can then be located rapidly and corrected, using the techniques discussed in Section 6.

Appendix D is a test procedure for air in-leakage and includes the structure of a checklist for a particular unit.

Appendix E contains a tabulation of, and commentary on, the data contained in the responses received to the EPRI questionnaire prepared for this guideline.

It is hoped that this guideline will be a useful source book for understanding the scope of the problems associated with both air and water in-leakage, the indications that a problem has occurred, the major current methods available for locating the sources of such problems, and some of the techniques for correcting them in order to bring the unit back on-line as soon as possible.

2
CONDENSER PRIMER

Steam surface condensers have a major impact on plant efficiency and availability. Over the years, EPRI has conducted an extensive amount of research into all phases of condenser technology, most of this work was sponsored by the EPRI Generation and Storage Group. The results and findings of this research are applicable to both fossil and nuclear plants, and this document attempts to selectively summarize the information on condenser design, application, and maintenance that is contained in the vast amount of data gathered by EPRI. For instance, much of the information in the following section was based on *ABCs of Condenser Technology*, prepared for the EPRI Nuclear Maintenance Application Center [1]. A detailed reference list of all relevant EPRI publications is included in Appendix B.

2.1 Condenser Overview

A steam surface condenser is a specially designed heat exchanger of the shell and tube type; a configuration showing components common to all designs is shown in Figure 2-1. A condenser receives steam from the exhaust of a low-pressure turbine; this steam is condensed to a liquid by removing the predominately latent heat of vaporization through condenser tubes in which cooling water is circulating. Although the primary function of the condenser is to create a vacuum by condensing steam, the secondary functions include:

- Removing dissolved noncondensable gases from the condensate
- Conserving the condensate for re-use as the feedwater supply to the steam generator
- Providing a leak-tight barrier between the high grade condensate contained within the shell and the untreated cooling water
- Providing a leak-tight barrier against air ingress, preventing excess back pressure on the turbine
- Serving as a drain receptacle, receiving vapor and condensate from various other plant heat exchangers, steam dumps, and turbine bleed-offs
- Providing a convenient receptacle for adding feedwater makeup

A number of conditions external to the condenser can affect its thermodynamic performance. One of these is the ingress of air and other noncondensables, the routine removal of which is accomplished by the provision of air-removal systems and their auxiliary equipment. In addition to degrading thermal performance, excessive amounts of air in the shell side of the condenser can also cause high dissolved oxygen concentrations in the condensate and so increase the rate of corrosion in the steam generator. Similarly, the leakage of cooling water into the condensate can

detrimentally affect condensate chemistry, which can result in a negative impact on steam generator fouling and corrosion.

A variety of condenser configurations have to be taken into account when diagnosing problems and inspecting for both water and air in-leakage. The function of the condenser cannot be fully understood without considering its place within the Rankine Cycle, as well as the set of heat transfer principles that are involved.

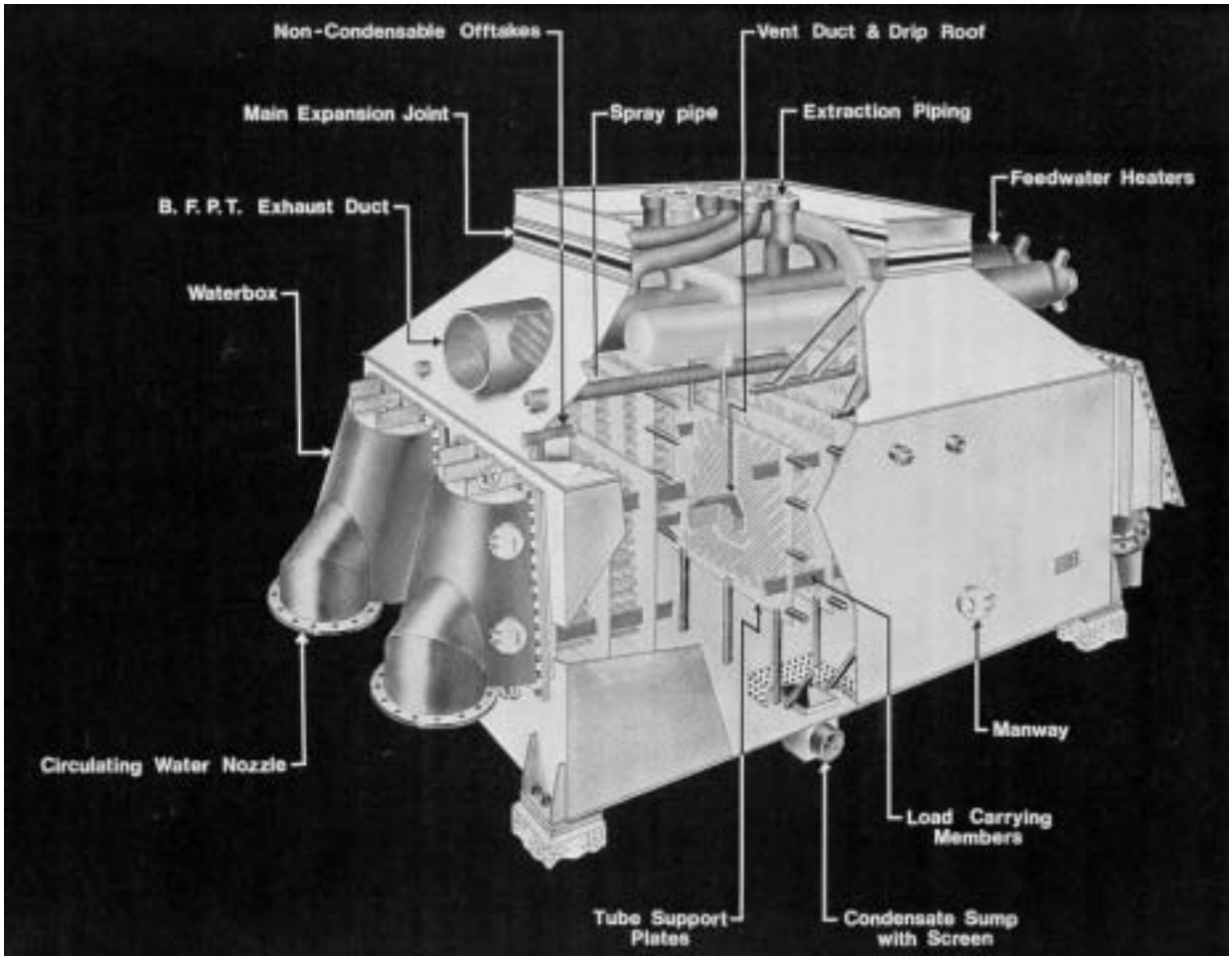

Figure 2-1
Typical Steam Surface Condenser
(Courtesy of Senior Engineering Co.)

2.1.1 The Rankine Cycle

The Rankine Cycle consists of a means of generating steam at desired conditions of pressure and temperature and then expanding it through a steam engine or steam turbo-generator in order to generate power. The vapor in the exhaust from the last stage of the expansion is then passed to a condenser, where the residual latent heat is removed by a source of circulating cooling water, and the condensate is recovered and passed back into the steam generator.

For a typical power plant unit designed in accordance with the Rankine Cycle, Figure 2-2 shows a Mollier diagram plot of the steam conditions at various points in a reheat cycle in terms of the enthalpy/entropy coordinates. The condensate (at point D) is drawn from the hotwell, located at the bottom of the condenser shell, by means of pumps. It is passed through the low-pressure feedwater heaters (E) and deaerator (F), and is then pumped at high pressure (G) through the high-pressure feedwater heaters and into the steam generator or boiler. Here, heat is imparted into the water to produce steam and superheat it to the conditions at point (H). After the steam is expanded through the high-pressure turbine (I), it is then reheated (J) and returned for expansion through the intermediate and low-pressure turbine stages, finally exiting the latter and entering the condenser in the form of a large volume of wet vapor (L). By continuously passing a source of circulating cooling water through the tubes located in the condenser, the latent heat is removed from the vapor which, as condensate, drains into the hotwell from which it can be recovered and recycled (line L-D).

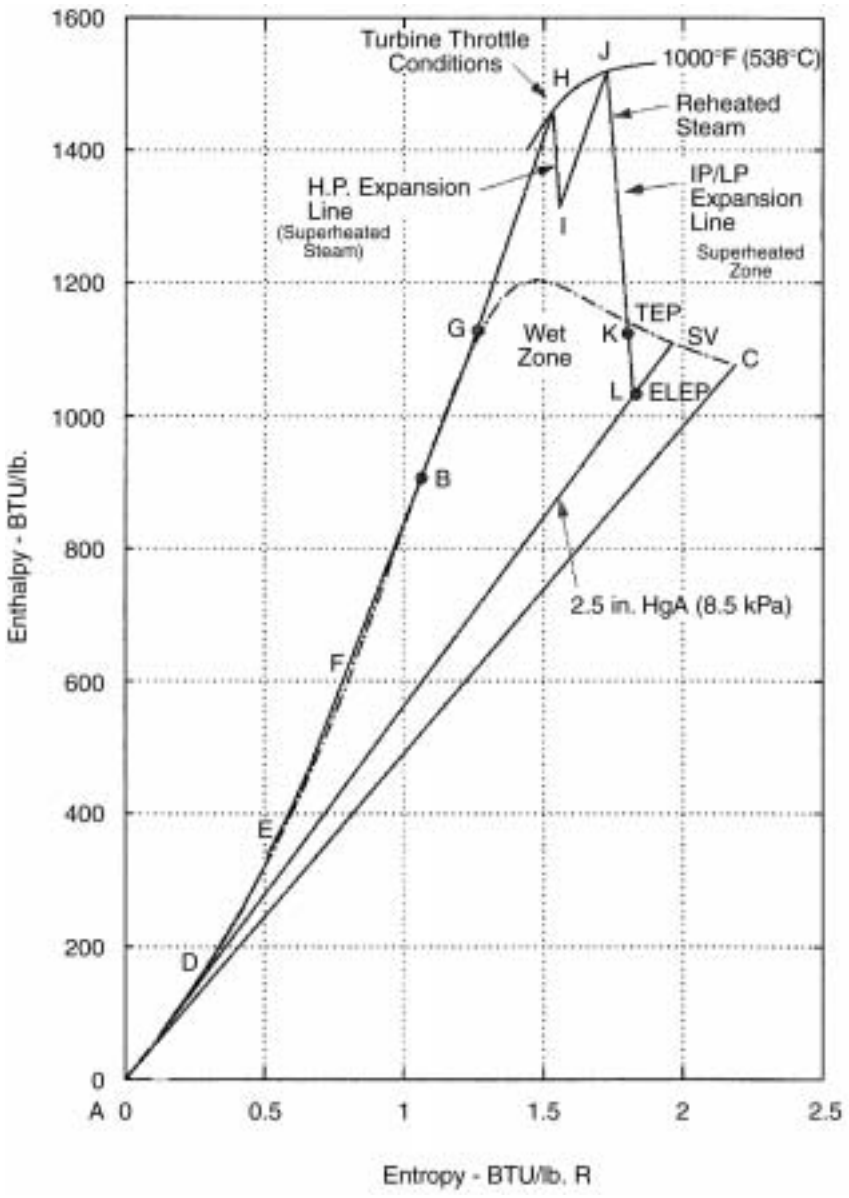

Figure 2-2
Rankine Cycle Diagram (Typical Fossil Plant)
Note: 1 BTU/lb = 2326 J/kg
1 BTU/lb R = 4186.8 J/kg K

Point L in Figure 2-2 is the intersection of the LP expansion line and the line joining the enthalpy/entropy coordinates of saturated vapor (point SV) and liquid (point D) corresponding to the condenser back pressure labeled here as 2.5 in. hgA (8.5 kPa). From the Mollier diagram, it will be clear that a rise in back pressure from 2.5 to 4.8 in. HgA (8.5 to 16.3 kPa) will cause a rise in the enthalpy of the exhaust above that of point L, thus reducing the amount of heat which can be converted to power. For a given MW load, there can be several possible causes for the condenser back pressure to rise, among them:

- An increase in circulating water inlet temperature
- A reduction in circulating water flow
- Fouling of the inside or outside surfaces of the condenser tubes
- An increase in concentration of noncondensables including air in-leakage in the shell side of the condenser
- A degradation of the air-removal exhauster

Referring again to the Mollier diagram in Figure 2-2, the total heat input into the cycle per lb. of steam is represented by the enthalpy difference between points H and D, plus the enthalpy difference between points J and I. The heat rejected from the cycle is that due to condensing the exhaust vapor and is a function of the enthalpy difference between points L and D. Meanwhile, the amount of energy converted to the generation of power is represented by the enthalpy difference between points H and I; plus the enthalpy difference between points J and L, where the backpressure is 2.5 in. HgA (8.5 kPa). It should be clear that, to maximize the amount of energy converted to power, the enthalpy at point L (corresponding to the back pressure) should be as low as possible, that is, a point below L, would be a power improvement.

2.1.2 Fundamentals of Condenser Heat Transfer Principles

A steam surface condenser used in the Rankine Cycle is essentially a cross-flow heat exchanger. There are two principal ways of estimating a condenser's current performance, the Heat Exchange Institute (HEI) method [2] and the ASME method [3]. Both compare the current value of the effective heat transfer coefficient (U_{eff}), computed from present steam and water temperatures and cooling water flow rate, with a reference value calculated according to one of these two procedures.

By rearranging the well-known Fourier equation for heat transfer, the effective heat transfer coefficient of the condenser can be calculated from:

$$U_{eff} = \frac{Q}{A*LMTD} \qquad \textbf{Eq. 2-1}$$

where:

$$LMTD = \frac{T_{out} - T_{in}}{\ln \frac{T_v - T_{out}}{T_v - T_{in}}}$$

To calculate an accurate value of U_{eff} requires knowledge of the cooling water flow rate, representative values of the inlet and outlet water temperatures, together with the compartmental back pressure. For multicompartment condensers, this set of information is required for each compartment.

Clearly, deviations in the condition of the condenser from design due to, for example, fouling or air ingress, will cause the value of U_{eff} to differ from its design value at the same load.

Note that, given the mechanical design details of a condenser, there is an equilibrium back pressure that corresponds to the set of operating conditions consisting of condenser duty, cooling water flow rate, and inlet water temperature. For a given duty, if the cooling water flow rate falls or the water inlet temperature rises, the back pressure will also rise. A similar increase in back pressure will occur if the tubes become fouled or the concentration of noncondensables in the shell space should increase [4] since both conditions tend to decrease the effective tube heat transfer coefficient. The concentration of noncondensables can rise if the exhauster pumping capacity becomes degraded or if air in-leakage increases to values above the exhauster capacity.

2.1.2.1 HEI Method of Calculating Condenser Performance

The reference value calculated using the HEI method is the *overall tube bundle* heat transfer coefficient and is a function of tube water velocity, inlet water temperature, tube material, tube gauge, and cleanliness factor. Tables and curves in the HEI *Standards for Steam Surface Condensers* [2] allow the appropriate values to be selected, either according to the design data set or the operating data set. Let:

U_{HEI}	=	HEI corrected heat transfer coefficient
U_1	=	HEI uncorrected heat transfer coefficient
U_{ref}	=	HEI reference heat transfer coefficient
F_W	=	Correction factor for water inlet temperature
F_M	=	Correction factor for tube material and gauge
F_C	=	Correction factor for cleanliness

Then

$$U_{HEI} = U_1 \times F_W \times F_M \times F_C$$

and

$$U_{ref} = U_1 \times F_W \times F_M$$

Design values of cleanliness factor F_C are usually around 85%, but values as high as 95% have sometimes been used. For condensers installed in geothermal plants, the design cleanliness factor

can be as low as 65% to allow for the increased concentration of noncondensables contained in geothermal steam.

When using the HEI performance criterion, the effective cleanliness factor F_{Ceff} can be defined as:

$$F_{Ceff} = \frac{U_{eff}}{U_{ref}} \qquad \textbf{Eq. 2-2}$$

To evaluate the current state of the condenser, the value of F_{Ceff} calculated from Equation 2-2 has to be compared with the design cleanliness factor (F_C) stated in the original condenser design data sheet provided by the manufacturer. However, experience has shown that the data contained in these design data sheets are not necessarily consistent, so that the stated value of the design cleanliness factor should be verified from the complete set of design data.

These cleanliness factor calculations are most reliable when the condenser is operating close to its design, or full load, conditions. However, there is much evidence that the design cleanliness factor varies with load (Putman and Hornick [5]. To evaluate performance under partial load conditions, the relationship between design cleanliness factor and load should be established. A method for doing this is contained in Putman and Karg [6].

With multi-compartment condensers, each compartment may be assigned a different design cleanliness factor; this should be taken into consideration when evaluating the performance of each compartment.

2.1.2.2 ASME Method of Calculating Condenser Performance

The ASME method [3,7] of calculating condenser performance uses an estimate of the *single-tube* heat transfer coefficient as the reference value. The value for a clean condenser is calculated from:

$$U_{ASME} = \frac{1}{R_w + R_t + h_f^{-1}} \qquad \textbf{Eq. 2-3}$$

The thermal resistance of the tube wall (R_w) is calculated using the Kern [8] relationship:

$$R_w = \frac{d_o}{24 k_m} \ln\left[\frac{d_o}{d_i}\right] \qquad \textbf{Eq. 2-4}$$

The value of the water side film thermal resistance (R_t) is calculated using the Rabas-Cane correlation:

$$R_t = 0.0450357\left[\frac{\mu^{0.373}}{\rho^{0.835} k^{0.538} C_p^{0.462}}\right]\left[\frac{d_i^{0.165}}{V^{0.835}}\right]\left[\frac{d_o}{d_i}\right] \qquad \textbf{Eq. 2-5}$$

The Nusselt factor (h_f) is calculated from the properties of water at the saturation temperature that corresponds to the compartmental back pressure and is calculated from:

$$h_f = 0.725 \left(\frac{k_f^3 \rho^2 g \lambda}{\mu_f D_o (\Delta T)} \right)^{0.25} \quad \textbf{Eq. 2-6}$$

With the ASME method, the term *performance factor* has been used instead of cleanliness factor and is calculated from:

$$PF_{eff} = 100 \frac{U_{eff}}{U_{ASME}} \quad \textbf{Eq. 2-7}$$

Because the ASME reference value of the heat transfer coefficient is a *single-tube* value while the HEI reference value is an *overall tube bundle* heat transfer coefficient, the value of F_C is greater than the corresponding value of PF on the same condenser. It has also been observed that, just as in the case of the HEI cleanliness factor, the design value of PF also varies with load.

2.1.2.3 Effect of Air Ingress on Heat Transfer

For maximum thermal efficiency, corresponding to a minimum back pressure, a vacuum is maintained in the condenser. However, this vacuum encourages air in-leakage. Thus, to keep the concentration of noncondensable gases as low as possible, the condenser system must be leak tight, together with any part of the condensate system that is under vacuum. Failure to prevent or remove the noncondensable gases may cause serious corrosion in the system, lower heat transfer properties, and/or increase plant heat rate due to the back pressure rise associated with a high in-leakage. The cost of excess back pressure in terms of additional fuel or increased heat rate is discussed by Harpster et al. [9].

An adequate air-removal and monitoring system is essential. The HEI standards [2] provide reasonable guidance on the permissible ratios of air in-leakage to the air-removal capacity. Most new condensers are now guaranteed to reduce oxygen levels to below 7.0 ppb at full load. However, air in-leakage can occur in any part of a condenser/turbine system that is operating at subatmospheric pressures so achieving and maintaining these guaranteed figures largely depends on proper equipment maintenance.

The primary sources of air in-leakage in a condenser are as follows:

- Atmospheric relief valves or vacuum breakers
- Rupture disks
- Drains that pass through the condenser
- Turbine seals
- Turbine instrumentation lines
- Turbine/condenser expansion joint

- Tubesheet to shell joints
- Air-removal suction components
- Penetrations
- Condenser instrumentation, sight glasses, etc.
- Low-pressure feedwater heaters, associated piping, valves and instruments
- Valve stems, piping flanges, orifice flanges
- Manways
- Shell welds
- Condensate pump seals

Condensers are provided with air-removal equipment to evacuate the vapor/air mixture that accumulates in the area of those tube bundles termed the *air-removal section*. Details of air-removal systems will be discussed later, but the presence of even small amounts of air or other noncondensables in the shell space can cause a significant reduction in the effective heat transfer coefficient. Figure 2-3 plots the effect as determined by Henderson and Marchello [10]. The vertical scale is in terms of the ratio of the shell side film heat transfer coefficient in the presence of air to the corresponding Nusselt value, while the horizontal scale is the mole percent of air in the vapor. The importance of avoiding excessive concentrations of air in the shell side of the condenser is shown in the sharp falling off in the ratio when only small quantities of air are present; the curve tends to become asymptotic with increased air concentrations.

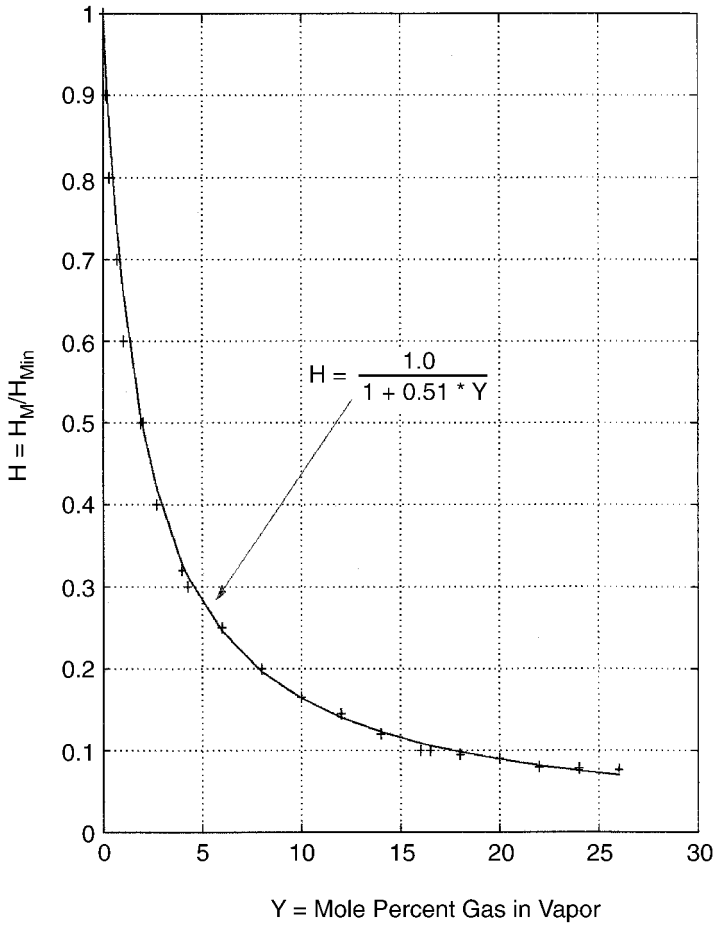

Figure 2-3
Effect of Noncondensables on Nusselt Value

Similar effects are produced by the presence of other common noncondensables, such as ammonia (for example, from hydrazine treatment of boiler feedwater), carbon dioxide, and, in the case of geothermal plants, hydrogen sulfide.

It should also be noted that a reduction in the cleanliness (or performance) factor can be due to either fouling or air ingress, but it is difficult to quantify how much each of these two effects is contributing individually to an observed change in heat transfer without examining other operating factors.

2.1.2.4 Effect of Cooling Water Ingress

The condenser tubes and tubesheets act as barriers between the relatively impure cooling water and the high grade condensate. Due to the vacuum inside the condenser, any tube leakage will cause contamination of the condensate by the cooling water. This can lead to increased corrosion of the secondary system. Although prevention of cooling water in-leakage is imperative in all cooling water systems, it becomes critical when brackish water or seawater is used for cooling. Even a leakage on the order of 0.1 gpm (0.4 liters per minute) may be unacceptable and can

cause significant corrosion [1]. Details of this important condenser problem will be discussed in Sections 4.4 and others.

2.1.3 Air and Noncondensable Removal

The concentration of a dissolved gas in a solution is directly proportional to the partial pressure of that gas in the free space above the liquid and inversely related to temperature. Deaeration or removal of the dissolved oxygen from the water takes place by the reduction of partial pressure of air in the surrounding atmosphere, regardless of the total pressure. Thus, condensate should be reheated to a temperature above which oxygen entrainment is minimized. This can be done by using steam spargers, bubbling steam through the hotwell, or passing condensate through a deaerator. Chemical compounds are sometimes added to the water to remove the last traces of oxygen. Oxygen and other noncondensable gases released in the condenser are then removed through vacuum pumps and/or air ejectors.

2.1.4 Hotwell

The base of a condenser serves as a holding tank for the condensate and is know as the *hotwell*. Condensate is drawn from the hotwell by the condensate pumps, which pass it to the feedwater system. Because the hotwell is the lowest pressure point in the steam cycle, it is also the most logical point for the collection of various condensate vents and drains. The cold makeup water line and the incoming vents and drains are usually connected to the condenser at an elevation above the tube bundles. By the time the fluid reaches the hotwell, it should have been heated sufficiently to become deaerated.

2.1.5 Subcooling

In a discussion on subcooling, it is important to distinguish between the effects of condensate subcooling and hotwell subcooling within a condenser. In the case of condensate subcooling, heat transfer theory indicates that the mean temperature of the condensate at the tube surface and subsequently the temperature of the cooling water must be less than the temperature of the condensing water vapor in order for heat to flow from the condensing vapor, through the tube walls, and into the cooling water flowing through the tubes. Further, as the vapor progresses through the bundle, the heat transfer coefficient of the rows in the tube bundle tends to fall from row to row [6], tending to further reduce the mean temperature of the condensate on each tube. There is thus an inherent tendency for the temperature of the condensate, and in particular on the tube ends nearest the inlet water box, to be below that of the exhaust vapor equilibrium temperature based on turbine back pressure.

Since this back pressure is dictated by the hotwell temperature, which is a result of the “average” temperature of the condensate falling into the hotwell, the cooler condensate regions on tubes are considered subcooled. In these regions, there is a marked increase in oxygen solubility. To minimize the effects of condensate subcooling on certain sections of tubes, condenser designers introduce lanes into the tubesheet layout so that some of the incoming vapor can enter the tube bundles at lower rows and so regenerate the temperature of the condensate rain as it cascades down the tube bundles.

To understand hotwell subcooling, consideration should be given to performance of the turbine and plant design. It is a design objective that the condenser should remove the latent heat of condensation from the steam, but no more. Further, at full load, it is desirable that the steam leaving the final stages of the LP turbine has a small amount of condensed water in the form of a mist. To establish these two states, the nominal operating conditions of condenser circulating (cooling) water flow rate and temperature are considered.

Variations in the nominal range of circulating water temperature or flow rates will cause the turbine blade water concentration to change. As an example, if only the circulating water temperature decreases, the average hotwell temperature will decrease, causing a reduction in turbine back pressure, which, in turn, decreases the moisture concentration at the final stage LP turbine blades. When there is no longer any water in these final stage turbine blades, the steam exiting the turbine blades experiences choked flow, limiting the flow of steam. Further thermal energy removal from the condenser either by lower temperature or higher flow rate of the circulating water results only in subcooling of hotwell condensate, allowing the hotwell temperature to fall below the temperature of the turbine exhaust steam. Because of its dry state, the exhaust steam can be considered superheated. This hotwell subcooling is uneconomical because the excessive amount of heat removed by the subcooling needs to be restored in the steam generator or by adding more fuel to the boiler. Moreover, subcooling markedly increases oxygen solubility.

The ultimate degree of condensate subcooling that is experienced varies with load and cooling water inlet temperature; but at full load, the condensate temperature is normally slightly less than, but approaches that, of the incoming exhaust vapor. Thus, if there is little or no suction head pressure at the suction of condensate pumps (for example, due to a shallow hotwell depth), the slightly lower temperature also helps to reduce pump cavitation because condensate at saturation temperature is more likely to flash off into steam.

The air-removal section is normally located toward the bottom of, or deep within, the tube bundles where the condensate and water vapor temperature tends to be lower, and the vapor becomes subcooled with respect to the saturation temperature corresponding to the pressure of the vapor. It is a region of tubes surrounded by a shroud (roof and side panels) to protect the tubes from being heated by falling condensate and steam. This shrouded region is connected to an external exhauster by means of an air-removal line. The lower tube temperature and associated vapor subcooling tends to cool any air or other noncondensables present, thus reducing their specific volume, condensing the extracted water vapor, and so concentrating these gases within this protected area. These actions create a scavenging process to remove noncondensables from the region under the shroud from which the exhauster located at the other end of the air-removal conduit can subsequently remove them. It is quite common for the tubes in the air-removal section to be made from a more noble metal than the main tube bundles, often from stainless steel if a copper alloy was used for the main tubes.

In order for the flow of vapor into this air-removal section to scavenge out the noncondensables, it is important for this zone, up to and including the air-removal section, to have the lowest temperature and water vapor pressure in the vapor flow path. If the air/water vapor mixture entering the air-removal line connected to the air-removal section is at 100°F (38°C) and the hotwell temperature is 106°F (41°C), this 6°F (3.3°C) temperature differential will cause a 0.38 in. HgA (1.28 kPa) water partial pressure difference across the air-removal section. The

convergence of air in this region progressively increases the partial pressure of air, minimizing the overall effect on total pressure. The performance of the air-removal section is the subject of a publication by Harpster [11].

If the level of the condensate in the bottom of the condenser rises above the lower tube rows, it affects the flow of vapor into the lower sections of the condenser, including the air-removal section. The efficiency of air removal can also be affected, causing the concentration of noncondensables to rise and negatively affecting the heat transfer and even the dissolved oxygen concentration in the condensate.

2.1.6 Condenser Configurations

The configuration of the condenser and its auxiliary systems has an important influence not only on how performance should be computed but also on how tests for in-leakage have to be conducted and the leaks isolated. The condenser on any given steam turbo-generator may be designed with one, two, or three compartments. The water flow path both within a compartment and between compartments is also site specific.

Even the configuration of the air-removal system itself can take many forms. Not only can the vacuum pumps consist either of sets of steam jet air ejectors (SJAEs) or of one or more liquid ring vacuum pumps (LRVPs), but sometimes both types of pump are employed. The configuration of the conduit and connections between the vacuum pumps and the condenser compartments can also vary. Sometimes, there is a direct connection between a compartment and its air-removal system, but often several vacuum pumps are provided with common headers that can introduce their own complications to the task of leak detection.

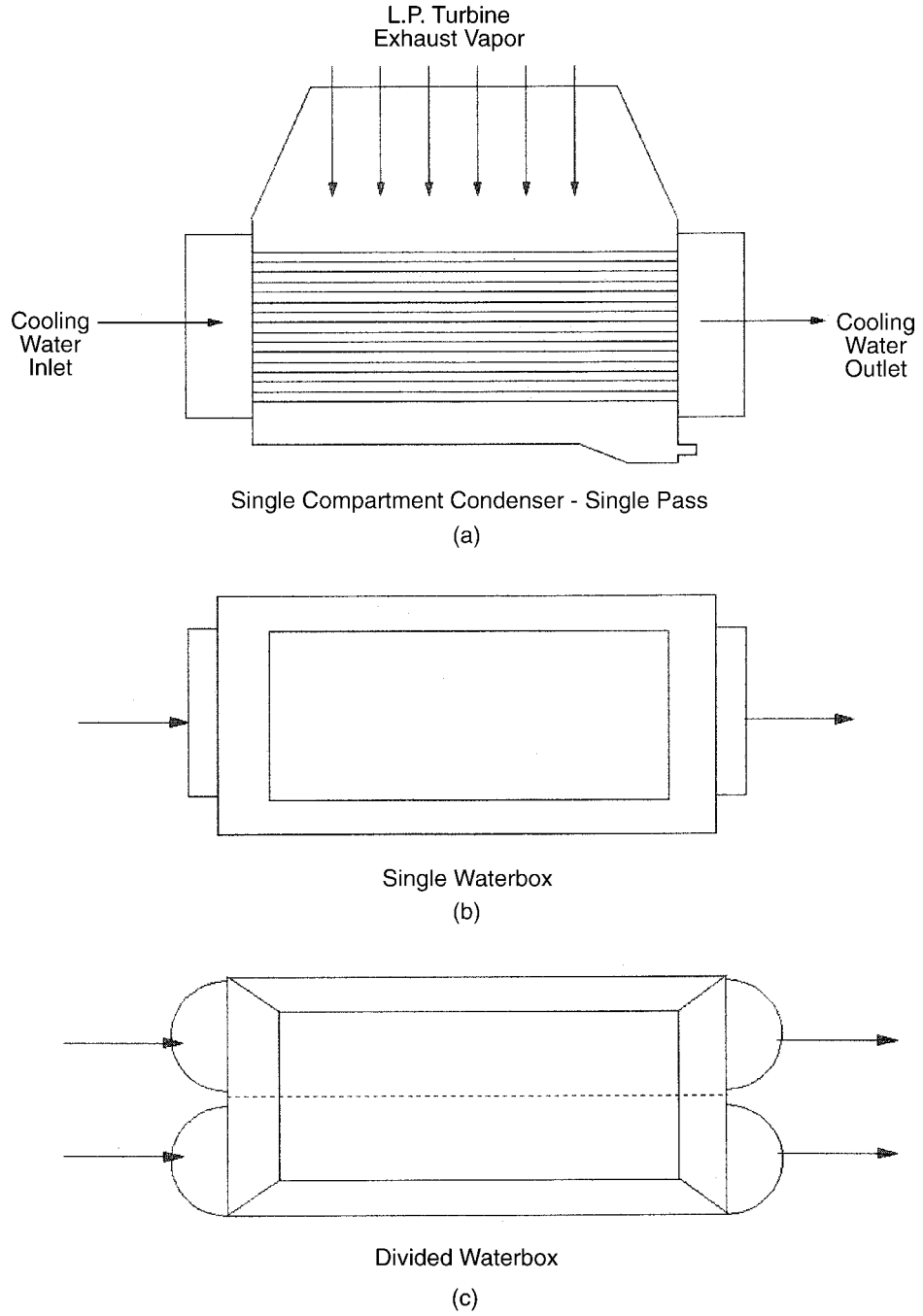

Figure 2-4
Waterbox Configurations – Single-Pass Condenser

2.1.6.1 Single Compartment Condensers

Figure 2-4A shows some possible water path configurations for a condenser with a single compartment. In many cases, the water path is once-through, a configuration that is very common even for condensers that have more than one compartment. Many of the smaller

condensers of this configuration have only one inlet and one outlet waterbox (Figure 2-4B), and the unit must be taken out of service before access to the tubes can be made possible. On larger units, a divided water box is provided (Figure 2-4C), where access to one box at a time now is possible with the unit still on-line, but running at a reduced load.

Figure 2-5 shows a condenser with a single compartment but two passes. The circulating cooling water enters through the upper waterbox, the flow then turns through 180 degrees and passes through the lower tube bundles before leaving the condenser through the lower water box. With such two-pass condensers, only half of the total number of tubes is available for each water flow path and the calculated water velocity must take this into account.

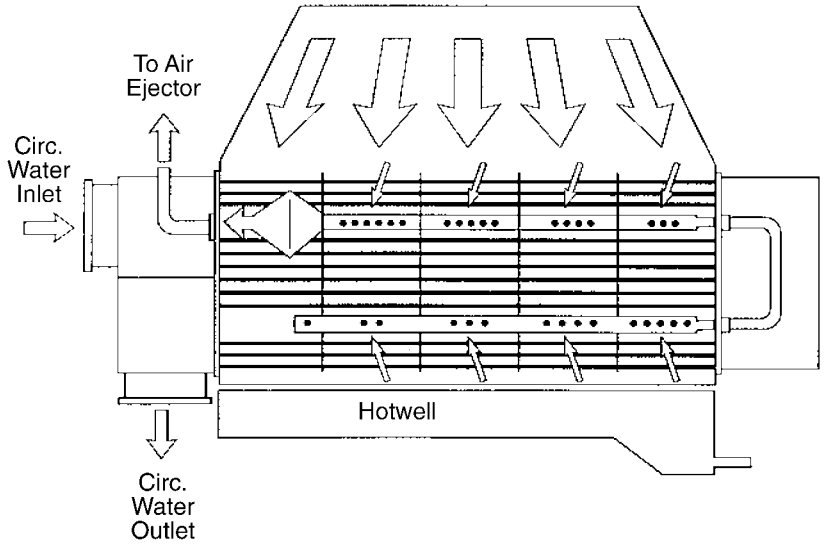

Figure 2-5
Single Compartment Condenser - Two Pass

2.1.6.2 Two-Compartment Condensers

Two compartment condensers can take any one of several forms. Each compartment may be of the once-through type arranged in parallel as shown in Figure 2-4. Given a common water inlet temperature and assuming the exhaust flow is equally divided between the two compartments (an accepted and justifiable industry assumption), then the back pressure in both compartments will be approximately the same.

Alternatively, the two compartments may be in series, as shown in Figure 2-6, where the water leaving the first condenser compartment is connected to the inlet of the second compartment. In this case, even assuming an equally divided exhaust flow, the two compartments will operate at different back pressures, and their inlet and outlet water temperatures will also be different. To calculate the performance of such configurations, it is important for the water temperature in the connector between the two compartments to be measured.

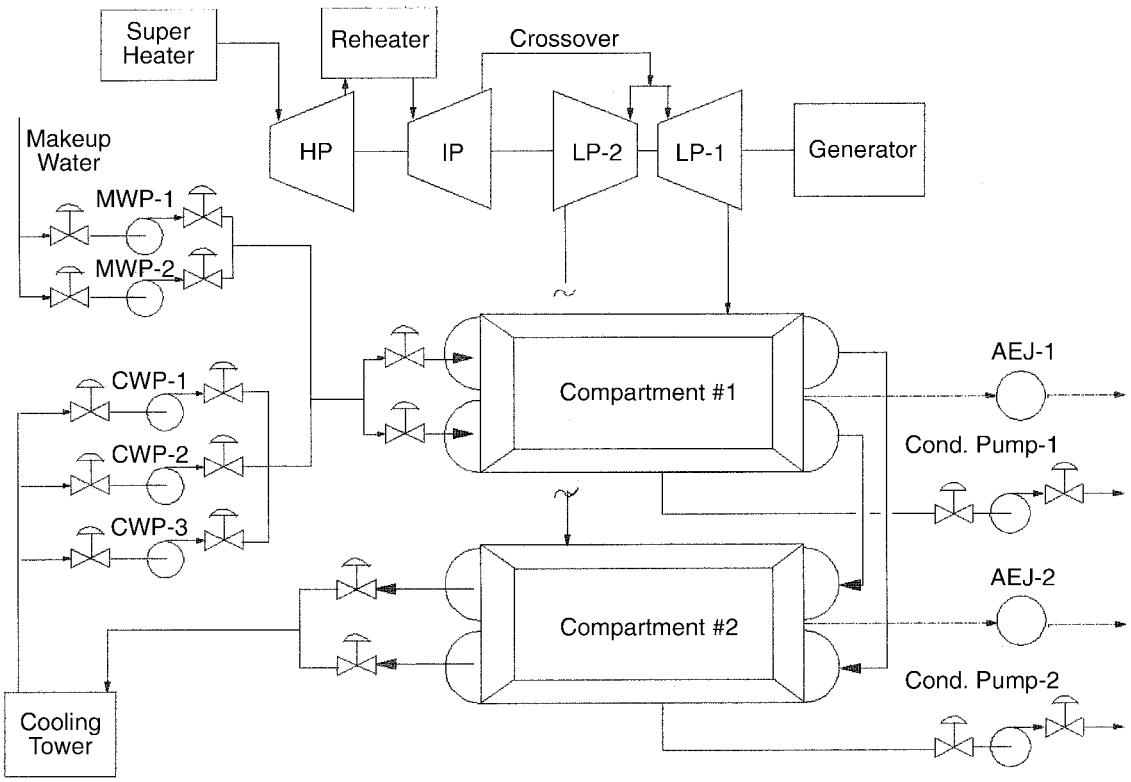

Figure 2-6
Two-Compartment Condensers

Figure 2-7 shows a two-compartment condenser in which the tube bundles run continuously through both compartments. The inability to measure the intercompartmental water temperature introduces serious difficulties to the proper estimation of performance, although this can be improved with the aid of mathematical models that have been constructed to reflect this configuration.

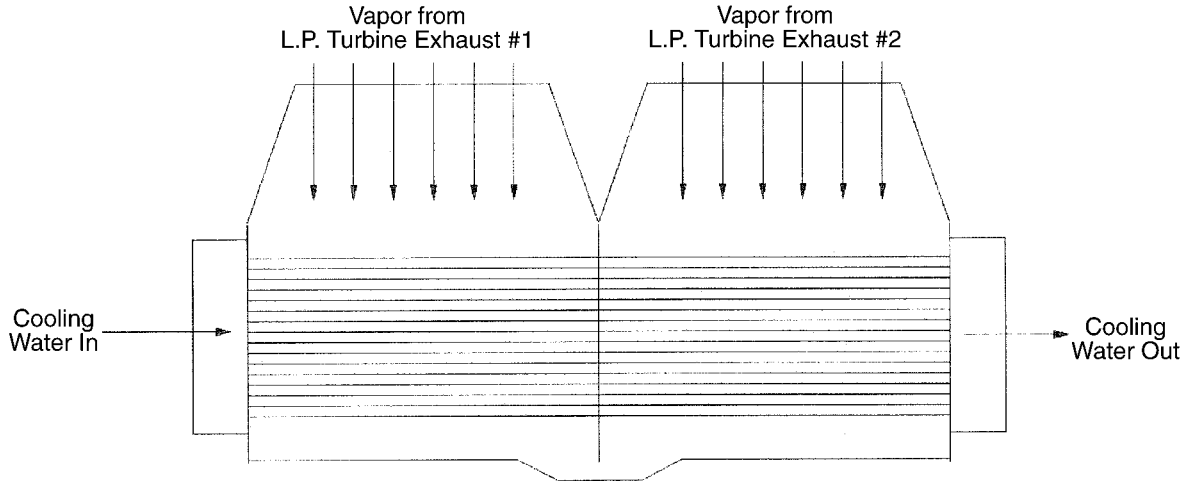

Figure 2-7
Two-Compartment Condensers, Different Back Pressures

2.1.6.3 Three-Compartment Condensers

Three-compartment condensers can also consist of several single-compartment condensers of the once-through type arranged in parallel, often with divided water boxes. However, another configuration is shown in Figure 2-8, in which the water path runs through each compartment in series, in which case, their back pressures as well as inlet and outlet water temperatures differ from one another. Again, in order to properly estimate the performance of each compartment, the temperature of the water in the connections between the compartments must be measured.

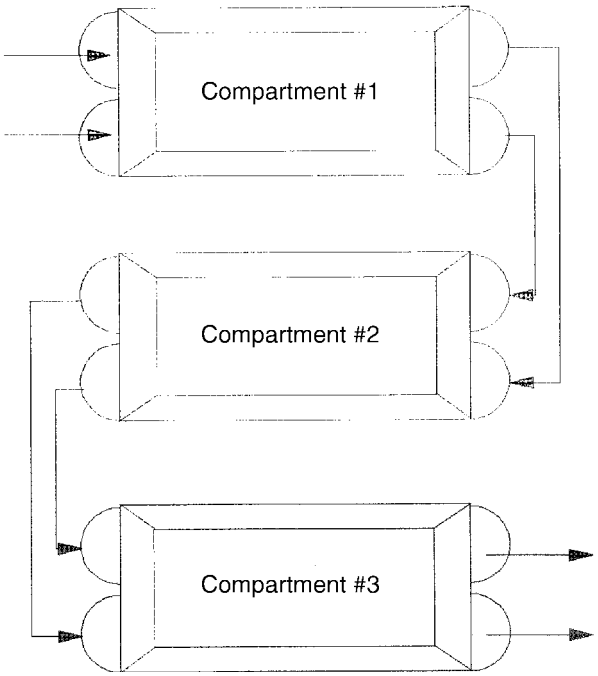

Figure 2-8
Three-Compartment Condenser, Different Back Pressures, External Connections Between Compartments

Another not uncommon configuration is to arrange for the tube bundles to run continuously through all three compartments, as shown in Figure 2-9. Again, the inability to measure the inter-compartmental water temperature introduces serious difficulties to the proper estimation of performance, although this can be improved with the aid of mathematical models which reflect this configuration, as shown by Putman [12].

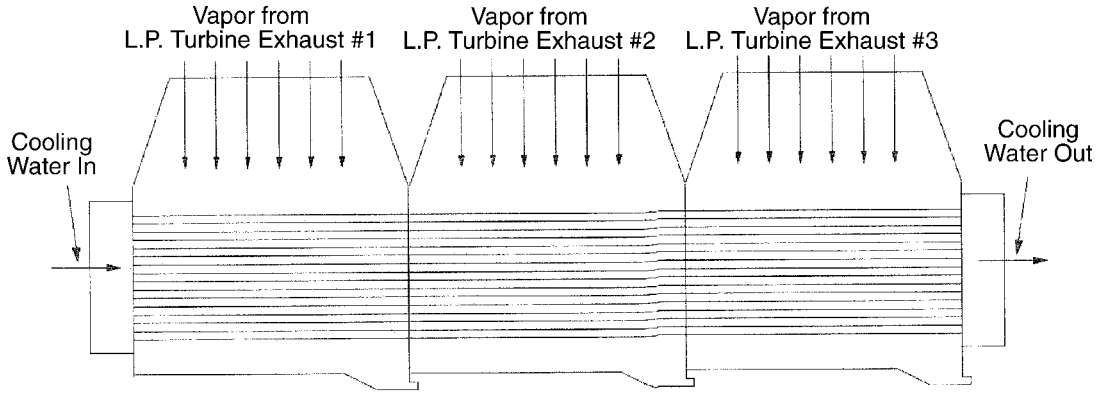

Figure 2-9
Three-Compartment Condenser, Different Back Pressures, Continuous Tubes

An alternative three-compartment configuration is shown in Figure 2-10, in which a water box is located in the center of the middle compartment. In this configuration, the tube bundles run from the inlet water box in compartment A to the water box in the center of compartment B; a separate set of tube bundles runs from this center water box to the outlet water box of compartment C. The ability to measure the temperature in this center water box, when used with a mathematical model, allows the intercompartmental water temperatures to be estimated and more accurate individual compartmental cleanliness factors to be calculated.

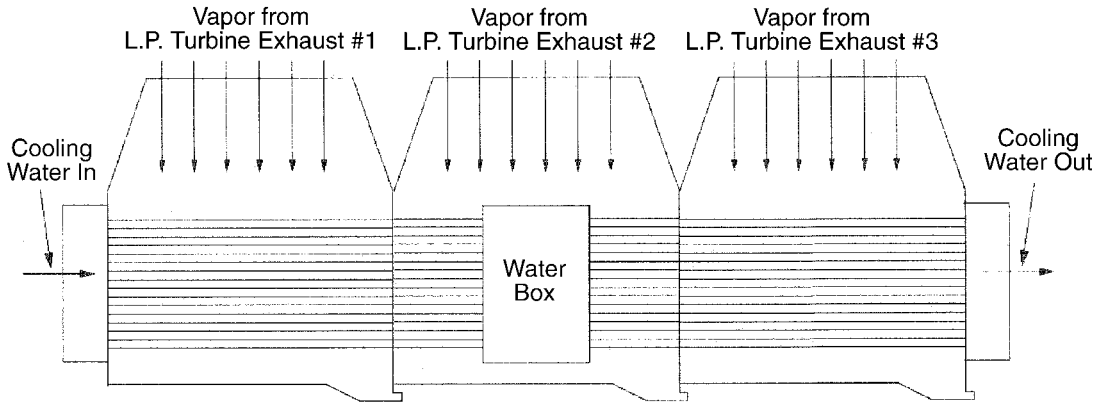

Figure 2-10
Three-Compartment Condenser, Different Back Pressures, Waterbox in Center Compartment

Figure 2-11 shows the layout of the condenser for a large turbo-generator, with the tube bundles running continuously through all compartments. Note the reduction in the area of the crossover connection as the steam flow is reduced by being drawn off through earlier low-pressure stages. Note also the exhaust from steam-driven boiler feedwater pumps being received only in some compartments. This affects the amount of latent heat that has to be removed by each compartment and must be allowed for in the mathematical model constructed for the condenser configuration.

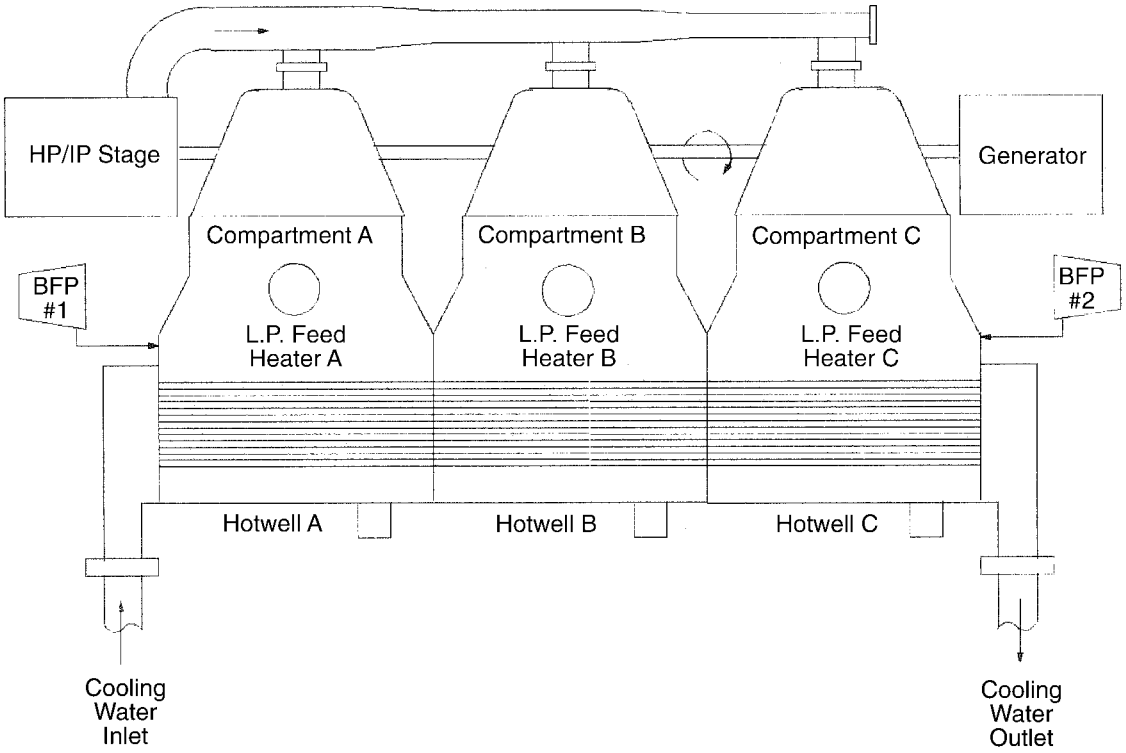

Figure 2-11
Three-Compartment Condenser, Continuous Tubes

2.2 Shell Side Air-Removal Systems

Shell side air-removal systems consist of:

- Air-removal tube bundles
- Steam penetration laning within the tube bundles
- Ducting connecting the air-removal area in the condenser to the vacuum pumps
- Vacuum pumps

Section 2.1.5 included a discussion of vapor subcooling and how advantage is taken of this effect when locating the tube bundles that constitute the air-removal section, as well as how laning not only affects the degree of subcooling but also ensures the thorough scavenging of noncondensables when the lanes are properly designed. It was also mentioned that the pressure around the air-removal section should be the lowest pressure point in the vapor flow path to that area, thus ensuring that the flow of the vapor extracted by the vacuum pumps as they remove the noncondensables from the condenser shell is not impeded.

The configuration of the ducting connecting the air-removal sections in each compartment to the associated vacuum pumps is quite site specific. The provision of any common headers and the uniqueness of the association between compartments and individual vacuum pumps all affect the effectiveness with which the equipment removes the noncondensables. They can also affect the

difficulties that will be encountered when endeavoring to locate both air and water in-leakage into the shell side of the condenser. Designers of condenser air-removal systems have to take care that the detection of leaks is not made unnecessarily difficult through an improper modularity in the equipment layout.

These matters will be examined further in the course of the discussion on in-leakage detection in Sections 6.0 and 11.0.

2.2.1 Air-Removal Criteria

The HEI *Standards for Steam Surface Condensers* [2] include guidelines for minimum recommended capacities of venting equipment. Air leakage values are tabulated based on lb/hr (kg/hr) steam flow, number of condenser shells, and number of exhaust openings in the condenser shells.

The design suction pressure for the venting equipment is specified for electric generating service as "1.0 inch HgA or the condenser design pressure, whichever is lower."

Take for example, a 500 MW turbo-generator with a two-shell condenser, each shell having one exhaust opening. Steam flow is 2,300,000 lb/h (1,043,260 kg/h), at a condenser design pressure of 2.5 in. HgA (8.5 kPa) with 90°F (32°C) cooling water. Venting equipment would be sized as follows:

2,300,000 lb/h / 2 exhaust openings	=	1,150,000 lb/h steam flow per opening
1,043,260 kg/h / 2 exhaust openings	=	521,630 kg/h steam flow per opening

From HEI Table 9 B [2], for two condenser shells, at 1,150,000 lb/h steam flow per opening, with a total of two exhaust openings, the design air leakage rate is 30 SCFM*.

HEI Table 9 also indicates the corresponding amount of water vapor carried over with this air flow at 1.0 in. HgA (3.4 kPa) and 71.5°F (21.9°C), based on vapor subcooling of 7.5°F (4.2°C) in the condenser. For this example, the venting equipment would, therefore, have to handle 297 lb/h (135 kg/h) of water vapor in addition to the 135 lb/h (61 kg/h) of dry air.

The above information is sufficient for selecting and sizing a steam jet air ejector system. When sizing an LRVP, an additional calculation is needed to determine the design cooling water temperature for the LRVP.

The performance of an LRVP is greatly affected by the temperature of the liquid ring within the pump. For the above example, at 90°F (32°C) the vapor pressure of water is 1.42 in. HgA (4.8 kPa). If an LRVP were to attempt to operate at 1.0 in. HgA (3.4 kPa), all the seal liquid would flash immediately into vapor.

* SCFM is standard cubic feet per minute at 60°F and 14.7 psia. Because not all countries convert SCFM to SI units in the same way, these measurements were intentionally not converted to SI units in order to avoid confusion.

To overcome this discrepancy, it must be remembered that the design pressure of the condenser (2.5 in. HgA or 8.5 kPa) and the LRVP (1.0 in. HgA or 3.4 kPa) do not match. For the design basis, it is necessary to calculate the water temperature that is required for the condenser to operate with the LRVP at its design pressure of 1.0 in. HgA (3.4 kPa).

Fortunately, this calculation is easy, based on the initial temperature difference (ITD) principle. The ITD of a condenser remains constant for a given condenser. There is a slight correction due to water temperature effects, but this can be ignored by including a small safety factor in the calculation. Using the principle of a constant ITD, condenser performance at off-design conditions can easily be predicted, as follows.

Let

ITD = Initial temperature difference
$T_{saturation}$ = Saturation temperature at the condenser design pressure
T_{water} = Design cooling water temperature

then

$$ITD = T_{saturation} - T_{water}$$

Using our example, at 2.5 in. HgA (8.5 kPa), the corresponding saturation temperature is 108.7°F (42.6°C), or

$$ITD = 108.7 - 90 = 18.7°F$$

Keeping the ITD constant, it follows that at 1.0 in. HgA (3.4 kPa) (79°F [26°C] or saturation pressure), the condenser will require a cooling water temperature as follows:

$$ITD = T_{saturation} - T_{water}$$

Therefore,

$$T_{water} = T_{saturation} – ITD$$

$$= 60.3°F (15.7°C) \text{ cooling water temperature required}$$

The LRVP design basis will thus be 30 SCFM air plus the associated water vapor at 1.0 in. HgA (3.4 kPa), or 71.5°F (21.9°C) suction temperature with 60.3°F (15.7°C) cooling water temperature. See Figure 3-6 for a typical LRVP performance curve. Normal practice is to provide 2 x 100% or 3 x 50% capacity LRVP packages. Steam ejector packages are usually provided with 2 x 100% ejectors with common intercondensers.

Hogging

The HEI Standard [2] also provides guidelines for rapid evacuation at startup. Initially, with the plant at atmospheric pressure, large quantities of air must be evacuated before the turbine can be started. This evacuation is referred to as *hogging*.

HEI Table 8 provides recommended hogging capacities that will result in evacuation from atmospheric pressure down to 10 in. HgA (33.9 kPa) in about 30 minutes.

For steam jet air ejector systems, a separate hogging ejector is provided. This hogging ejector is operated only during the evacuation and is turned off during normal operation of the plant.

LRVP systems should be selected based on the holding performance required. For hogging, both 100% (or all three 50%) LRVPs are operated in parallel.

2.2.2 Steam Jet Air Ejector Systems

The operation of a steam-driven air ejector uses the viscous drag of a high-velocity steam jet for the ejection of air and other noncondensables from a condenser compartment. The steam jet flows through a chamber where it entrains the air and any other gases adjacent to the surface of the jet. The kinetic energy of the resulting mixture is then converted to pressure energy by being passed through a diverging cone or diffuser. The resulting increase in pressure enables the mixture to be discharged against a pressure that is higher than that of the entraining chamber.

In the case of power plants where high condenser vacuums are common, it is necessary to use two or three ejectors in series to obtain a sufficient increase in mixture pressure for its discharge into the atmosphere. Interstage coolers are also frequently used to condense the steam leaving the preceding stage; the latent heat absorbed is reclaimed in the condensate used as the cooling medium. These coolers also lower the temperature of the steam leaving the ejector stage and reduce its volume before it enters the next stage.

The basic construction of a steam jet ejector is shown in Figure 2-12. Live steam is connected to the nozzle that is on the same axis as the mixing section and diffuser. The nozzle is mounted in the entraining chamber, a port on which is connected to the vacuum space in the condenser. The shapes of the internal surfaces of the nozzle, mixing section, and diffuser all contribute toward determining the effectiveness of entrainment of the air/vapor mixture drawn from the condenser compartment, while the physical position of the nozzle relative to the surfaces of the mixing section also plays an important role.

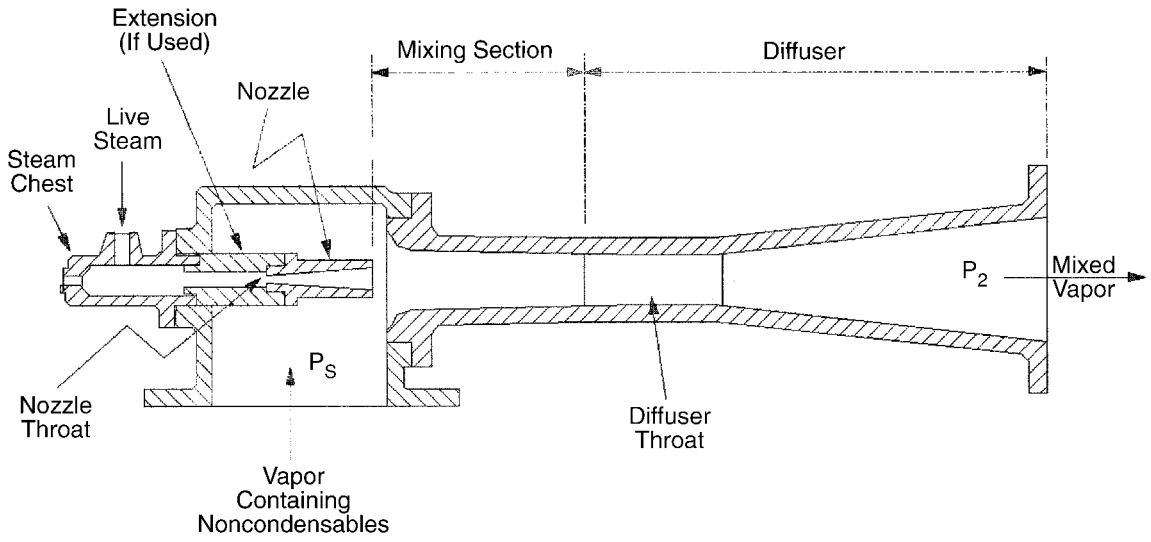

Figure 2-12
Typical Steam Jet Ejector Stage Assembly

An ejector stage is inherently a constant capacity device; the capacity is a function of the physical proportions of the diffuser. A stage also has operating limitations on the compression attainable and operates efficiently only up to a limited compression ratio (CR), defined as the ratio of the absolute discharge pressure (P_2) divided by the absolute pressure at the suction port (P_s) or:

$$CR = \frac{P_2}{P_s} \qquad \textbf{Eq. 2-8}$$

It is for this reason that multiple stages arranged in series often have to be used.

A wide variety of steam jet ejector system configurations exists; some are provided with interstage condensers that condense the vapor discharged by the preceding stage. A typical configuration is shown in Figure 2-13. Other systems are designed without condensers and have some associated performance limitations.

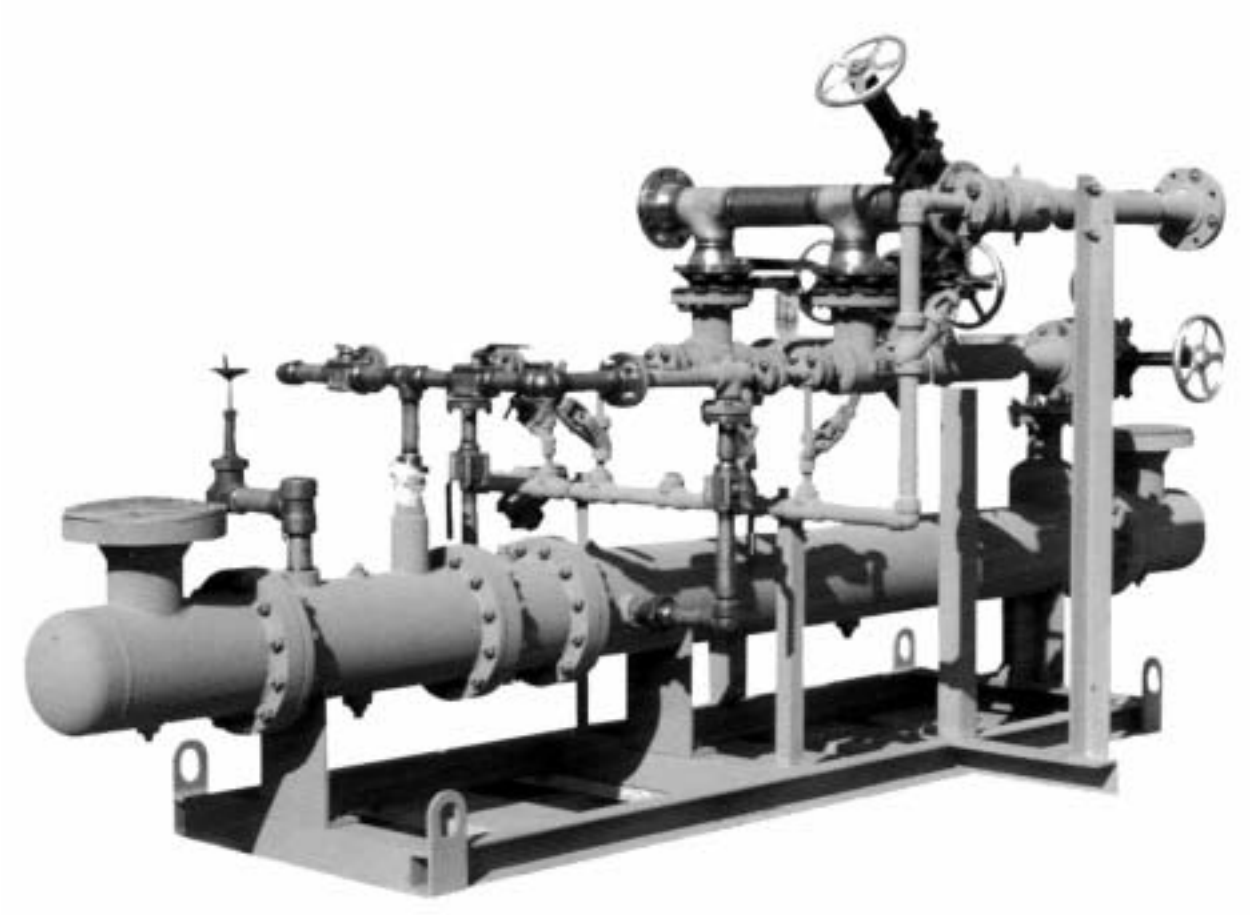

Figure 2-13
Typical Steam Jet Ejector System

Figure 2-14 shows both single- and two-stage configurations. Those on the left side are without condensers, while those on the right side show condensers located at the outlet of each ejector stage. Note that the condensers associated with steam jet air ejectors are often located in the discharge from the condensate pumps and so draw warm water directly from the condenser itself. In the case of two-stage ejectors, they are connected in parallel to the source of live steam.

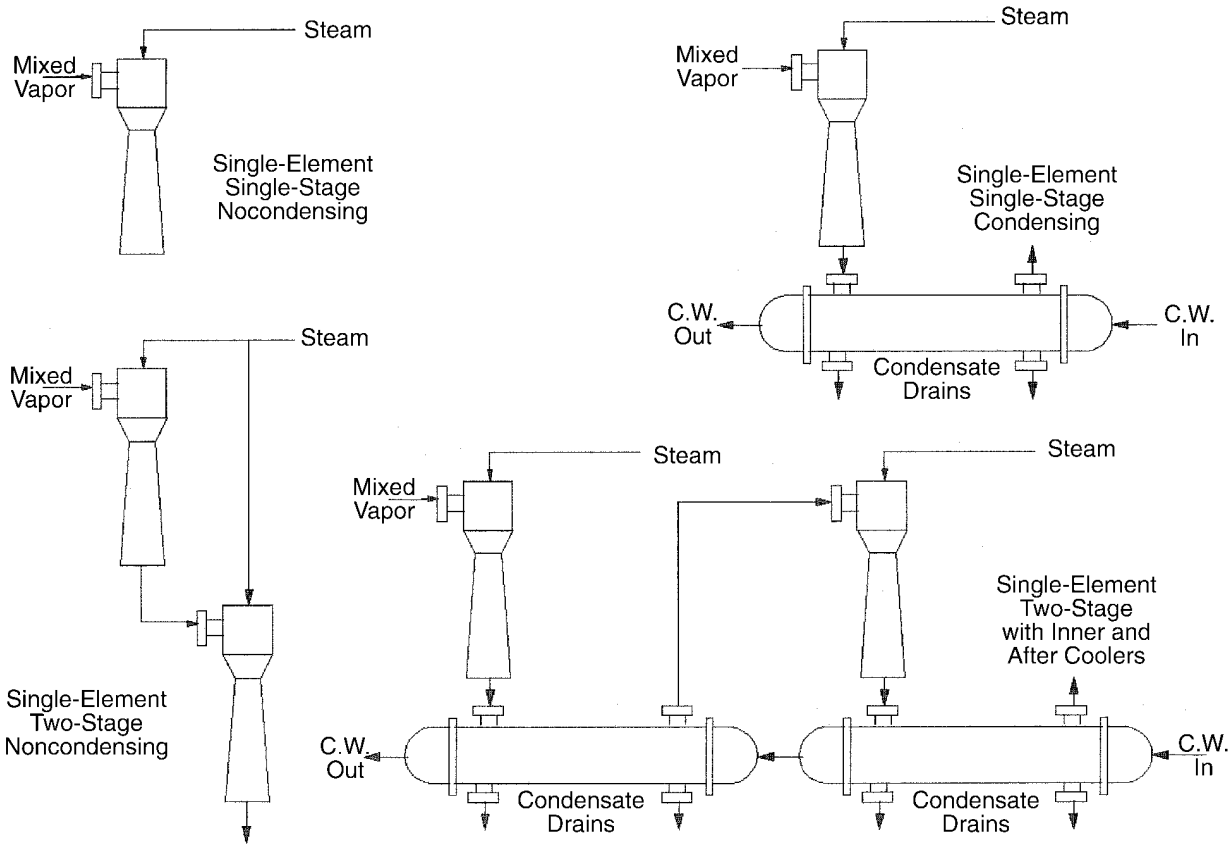

Figure 2-14
Single-Element Steam Jet Air Ejector Configurations

Figure 2-15 shows some parallel ejector configurations with interstage condensers absent. In this way, the capacity of an ejector with a given performance can be doubled. The discharges from the stage pairs can be connected together and passed to a common vent for discharge of the noncondensables to the atmosphere.

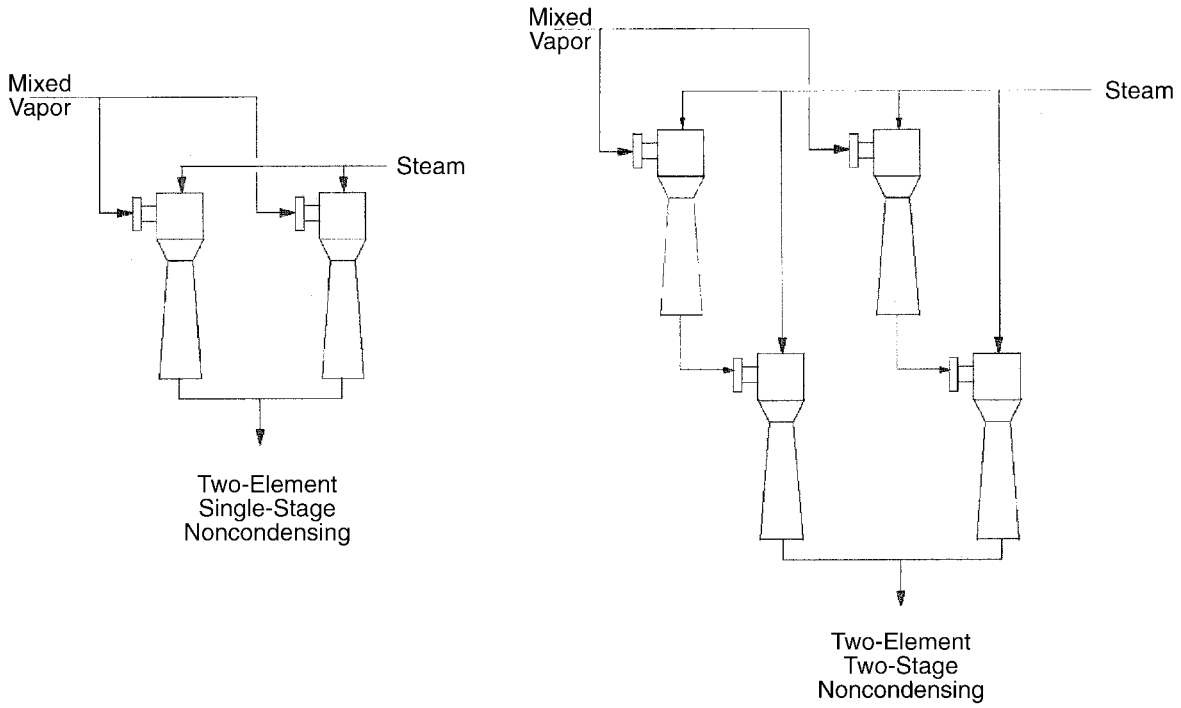

Figure 2-15
Typical Multi-Element SJAE Configurations

Figure 2-16 shows three sets of two-stage ejectors, complete with interstage condensers. This is a common configuration for the three-compartment condensers often found in nuclear plants; each set is connected to only one of three condenser compartments.

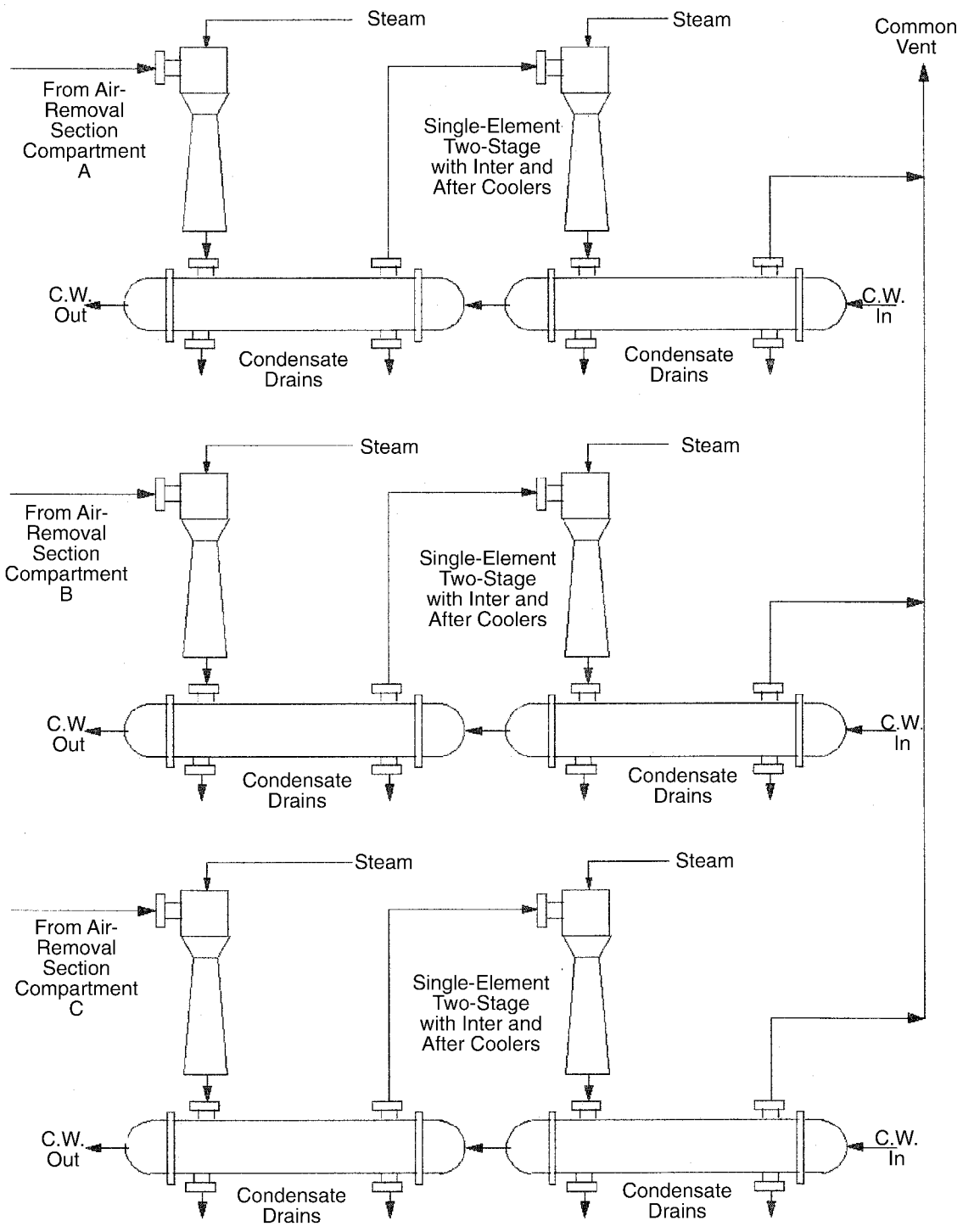

Figure 2-16
Parallel Trains of Equipment

2.2.3 Liquid Ring Vacuum Pumps

Liquid ring vacuum pumps (LRVPs) are the most common form of mechanical pump used in air-removal systems for steam surface condensers.

The liquid ring vacuum pump is a rotary positive displacement pump using a liquid as the principal element in gas compression. Centrifugal force causes the liquid injected into the inlet port to form a liquid ring rotating within the casing; the thickness is determined by the radial position of the discharge port. There is a relative eccentricity between the casing and the rotating multibladed impeller, so that the space within each impeller chamber that is not occupied by the liquid ring varies during each revolution. As each rotor chamber passes through the arc subtended by the inlet port, its volume increases, which tends to create a vacuum slightly below that in the condenser and draws a volume of the vapor/air mixture into the chamber. After the rotor chamber moves beyond the inlet port arc, the volume tends to decrease, thus compressing the vapor/air mixture to above atmospheric pressure and forcing it out through the discharge port. This variation of the rotor chamber space that has not been occupied by the liquid causes each chamber to behave like a piston. Sealing areas between the inlet and discharge ports are provided to create a barrier between them.

For the flat port plate type of pump, the salient design features are shown in Figure 2-17. The inlet and discharge ports are tapered radial arcs of varying width, milled into the surface of an inlet/outlet pump end casting. The inlet port forms an arc extending from zero to about 130 degrees (arc section 1 of Figure 2-17), and the discharge port is an arc extending between 260 and 340 degrees of angle (arc Section 3). Assuming the rotor to be rotating clockwise, within the arc of the inlet port the liquid moves outward relative to the center of the eccentrically placed shaft, increasing the volume of the chamber and drawing gas from the inlet port into the rotor chambers. Between the angles of 130 and 260 degrees (arc Section 2), the liquid moves relatively inward, again due to shaft eccentricity, compressing the gas in the rotor chambers. While from 260 to 340 degrees, the compressed gas escapes through the discharge ports.

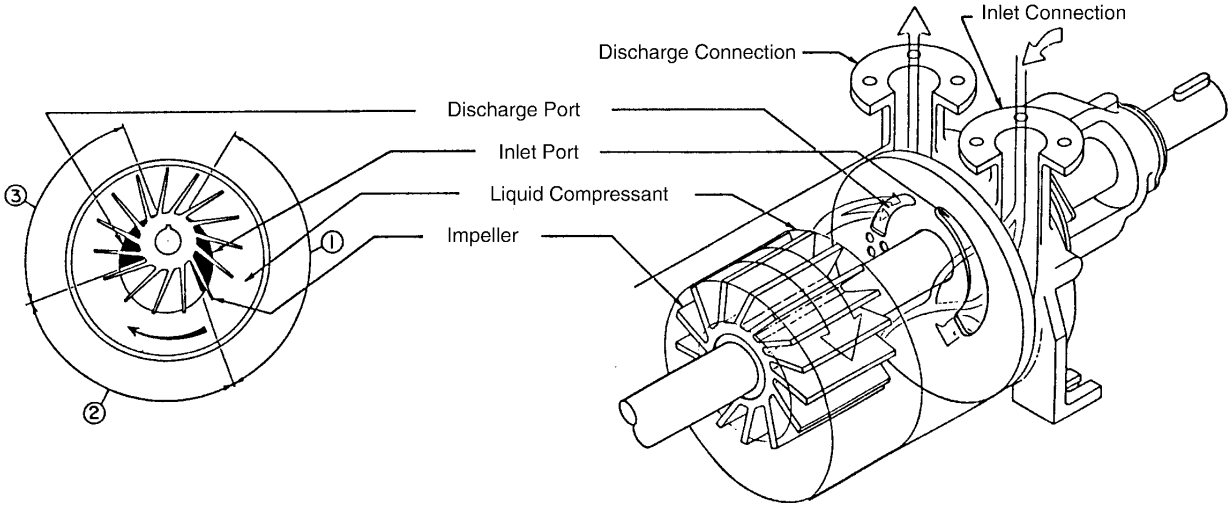

Figure 2-17
Operating Principle of Flat Port Type Liquid Ring Vacuum Pump

Another design of liquid ring pump shown in Figure 2-18 has conical ports, which are also arranged to occupy varying degrees of arc. In all other respects, the operation is similar to that for pumps with flat plate ports.

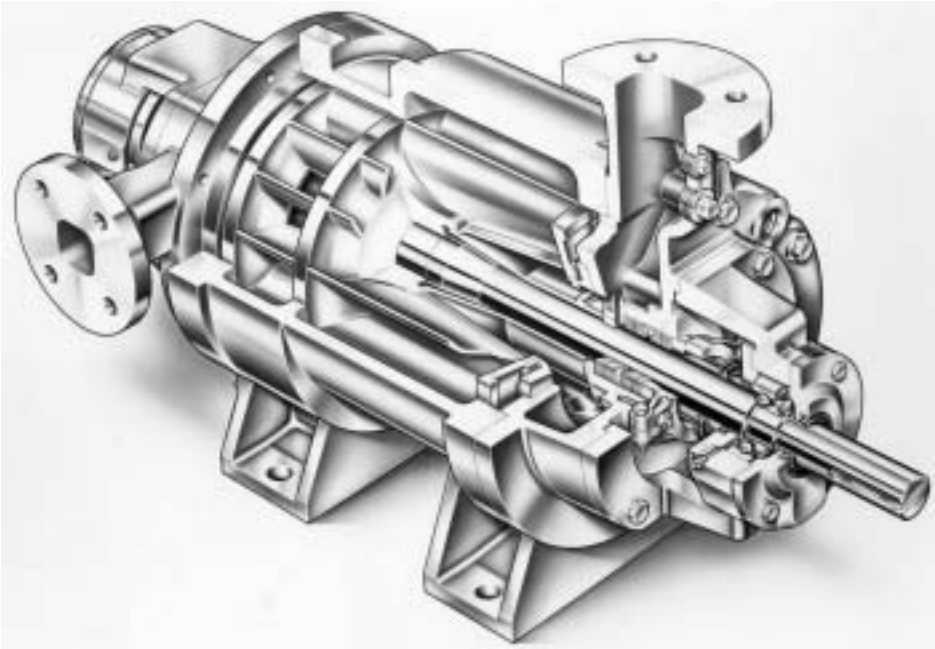

Figure 2-18
Conical Port Liquid Ring Vacuum Pump

Figure 2-19 shows the operating principle of an LRVP with conical ports. The major difference is in the location of the ports which, in this case, surround the shaft rather than being machined from the inner surfaces of the pump casing.

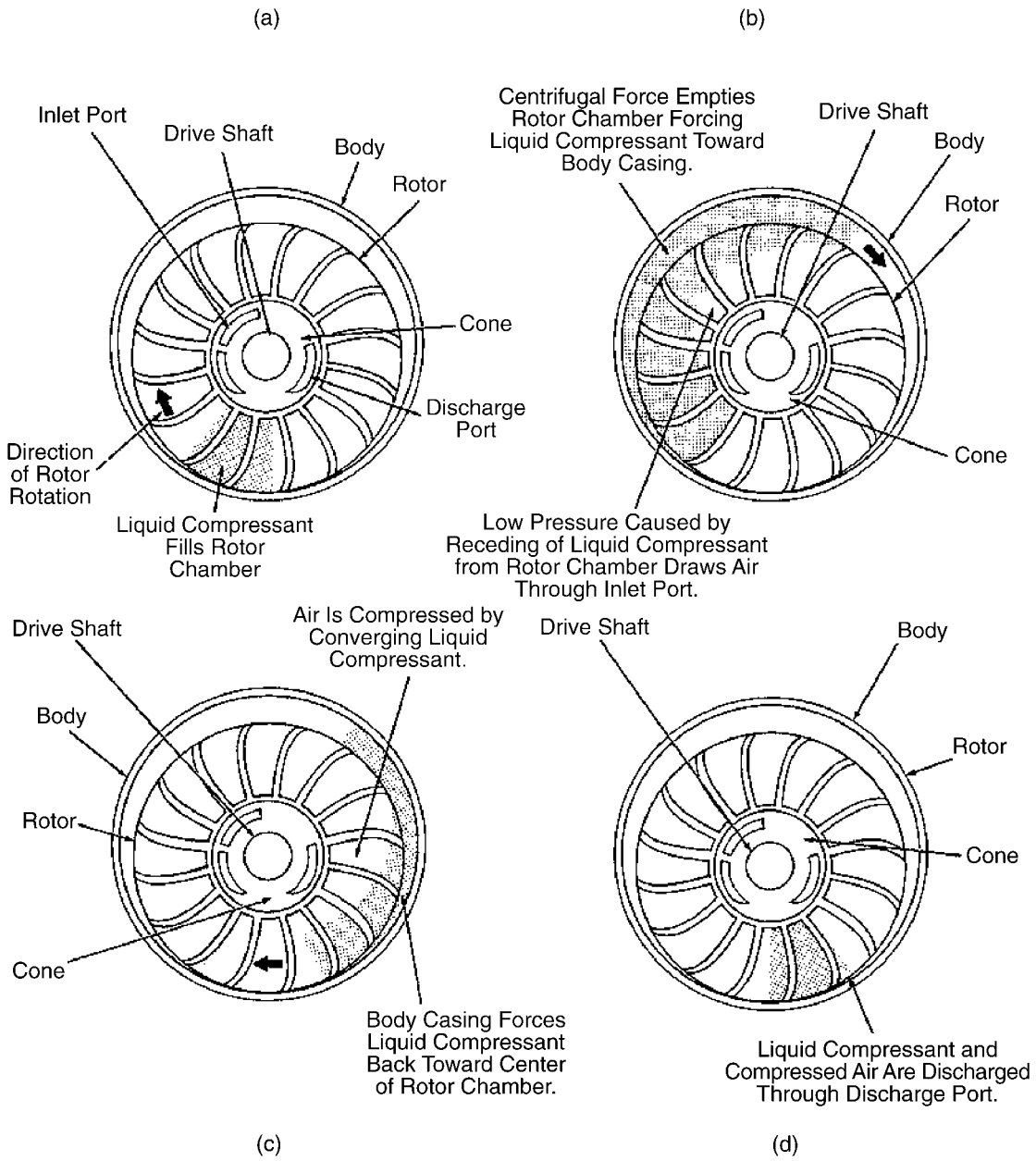

Figure 2-19
Operating Principle of a Conical Port Liquid Ring Vacuum Pump

In both types of LRVP, a portion of the liquid in the casing is continuously discharged with the gas, thus removing from the pump the heat generated during operation, while cooler service liquid is introduced at the inlet port to replenish the liquid seal.

A typical configuration of a complete air-removal system associated with a two-stage vacuum pump, including its auxiliary equipment, is shown in Figure 2-20. Among its salient features is a pneumatically operated system valve that opens only if the pump is already in operation and the differential pressure across the valve is less than a predetermined value. Another feature is the separator tank that receives the discharge from the second stage of the pump; the discharge

containing both air and water. A float valve controls the flow of make-up water into this tank, while a separate centrifugal pump extracts water from the separator tank and pumps it to the inlet of the first stage of the vacuum pump, to replenish the water forming the liquid ring.

Figure 2-20 also shows the seal water from the centrifugal pump passing through the seal cooler as it circulates back to the first stage of the pump. An external source of cooler service water is connected to this heat exchanger, which should be equipped with sufficient instrumentation so that its performance can be monitored.

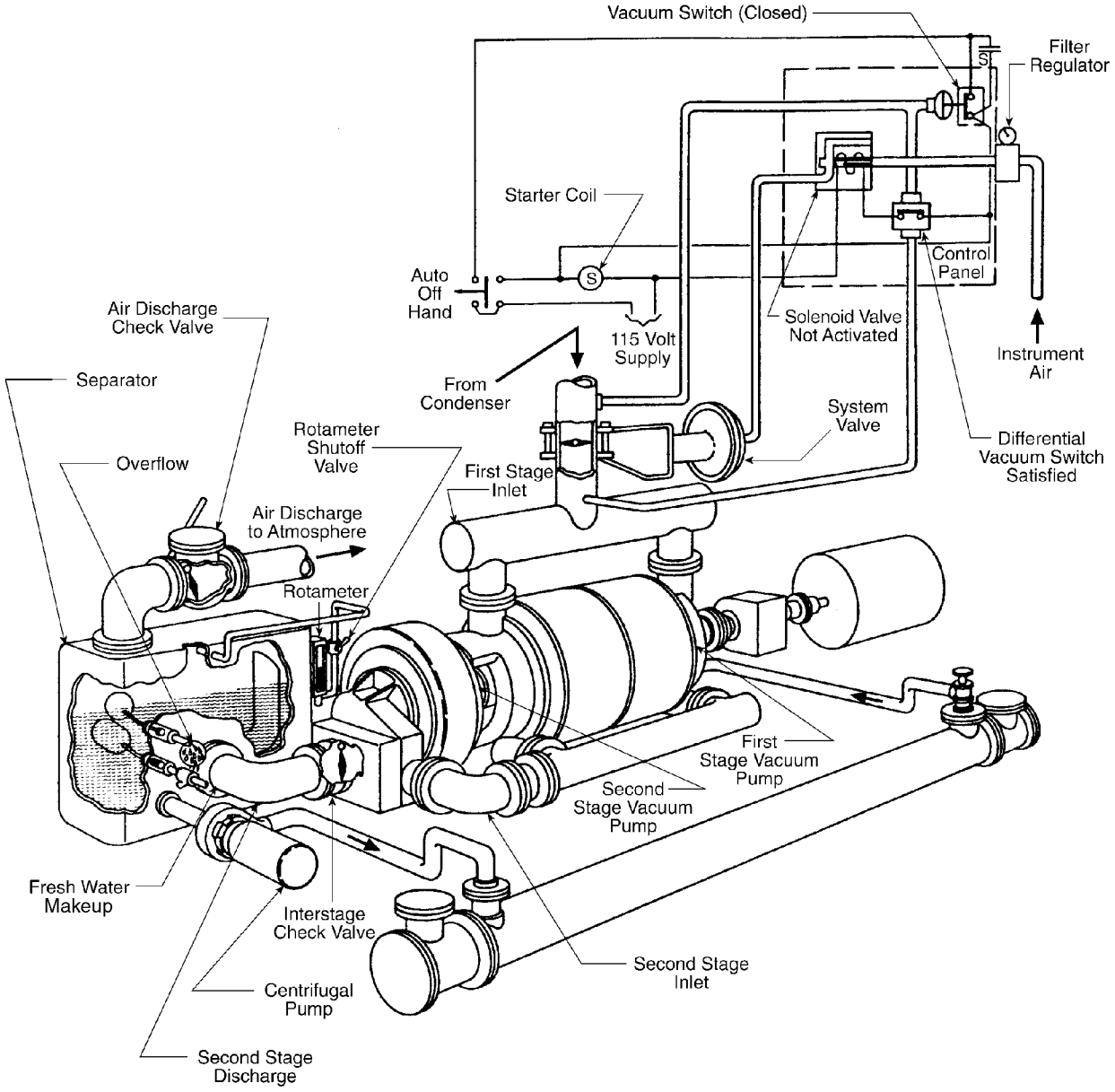

Figure 2-20
Liquid Ring Vacuum Pump System

Many LRVP systems are also equipped with a vacuum relief valve (not shown) that allows the quantity of air passing to the LRVP to be increased if the vacuum in the condenser falls below a predetermined threshold.

Finally, it is not unusual for more than one LRVP system to be provided and connected in parallel. This allows the air-removal capacity to be adjusted, especially during low load operation or low condenser circulating water inlet temperatures, but it also permits maintenance to be conducted without taking the unit out of service.

2.3 Condenser In-Leak Measurement Instrumentation

The problems of air in-leakage into the vacuum side of steam engines was first noted by James Watt in 1765 when he invented and developed the first commercially successful steam-powered engine. The steam engine, in its simplest form, consisted of a double-ended piston within a two-headed cylinder, a steam source, and a condenser. The piston was attached by linkage to a rotating shaft and a flywheel. At the end of a stroke, valves would open or close at both ends of the cylinder, allowing low-pressure steam to enter or escape the cylinder. At the low volume end of the cylinder, the exhaust valve closed and steam inlet valve opened, allowing low pressure steam from the steam source, which was not much more than a boiling pot, to flow into the cylinder as the piston traveled to the opposite end of the cylinder. At this same time, the steam inlet valve at the opposite end of the cylinder would close and the exhaust valve open, allowing steam on that side of the piston, from the previous stroke, to escape to the condenser. As steam condensed in the condenser, a vacuum was produced. With little more than atmospheric pressure steam on the other side of the piston, the resulting differential pressure provided the motive force to produce a power stroke. At the end of the stroke, the operation reversed, with vacuum on the other end of the piston.

If air leaked into the low-pressure side of the piston along the piston rod seal, the resulting power was severely reduced. A pressure gauge, in the form of a pressure relief valve, may have been used to indicate that there was an air in-leakage problem in the vacuum system and that the source of the leak needed to be tracked down and repairs made. The amount of air in-leakage could be determined by noting the position of the piston travel at the time the pressure relief valve opened.

This two-centuries-old need to measure the existence of air in-leakage causing excess engine back pressure (even in an overall 2% thermal energy conversion engine)—with the resulting reduction in the efficiency and effectiveness in steam energy conversion—has not changed. What has changed over the decades, however, is the overwhelming need to reduce plant operating costs by eliminating correctable causes of wasted energy and minimizing lost revenue due to forced outages.

A major cause of these two problems is excessive air in-leakage. High air in-leakage causes turbine back pressure to rise, dissolved oxygen (DO) concentrations to increase, and plant heat rate to deteriorate to higher values. Improving the precision and reliability of instrumentation for monitoring parameters associated with air in-leakage is critical to cost-effective operations.

Condensate contamination due to excessive circulating water in-leakage is another significant cost and a cause of forced outages. Contaminants such as carbonates, metal oxides, and salts contained in the cooling water will deposit and accumulate on boiler tubes as well as cause equipment corrosion. Boiler tube rupture caused by corrosion can lead to forced outages. Instruments such as conductivity, pH, and salinity meters help to identify when these leaks are excessive.

This section describes the importance of these instruments and how they can be used to improve plant operations.

2.3.1 Air In-Leakage Measurement

The consequences of air in-leakage on plant operation and condenser performance are discussed in Sections 2, 3, 4, 5, 6, 10, and 11. Ways to locate leaks using portable detection instruments not included within the normal station operating instrumentation are presented in Section 11, together with a detailed procedure for assessing and locating leaks.

This section deals with plant-installed instruments that are used on-line to indicate the existence of air in-leakage or measure its actual flow rate. The latter is a measurement of air being removed from the subatmospheric pressure environment within or connected to the condenser. This low-pressure environment includes the last stages and shaft seal of the LP turbine, the expansion joint between the turbine exhaust and the condenser, all lines and drains entering the condenser, the condenser shell and suction lines, inlet joints and seals of the condensate pump, and the air-removal exhausters.

2.3.1.1 Indicators of Air In-Leakage

The measurement of condenser pressure (or turbine back pressure), along with hotwell temperature, under certain constant conditions, provides an indication of excessive air in-leakage. A definable step-increase in turbine back pressure is a good indicator that an air in-leak exists, especially if it is observed when the plant load, inlet circulating water temperature, inlet circulating water flow rate, and hotwell temperature all remain constant and the exhauster capacity is also typical. Under these conditions, the measured increase in back pressure can only be caused by an increase in the partial pressure of air. This can occur only if there has been an increase in the air in-leakage to the point where the total level of in-leakage is above the pumping capacity of the exhauster at the equilibrium suction pressure corresponding to the current hotwell temperature.

There are serious limitations to relying on this method for an indication of excessive air in-leakage. It requires many dynamic systems to remain constant and repeatable, both before and after the leak occurred, in order to establish that there has been a quantifiable change in the back pressure. It may take days or weeks to define the value of an excess back pressure. Maner et al. [13] have estimated that, when using this method, a back pressure change has to be at least 0.3 in. HgA (1.02 kPa) before it can be confirmed. Such a step change in back pressure can result in a heat rate increase amounting to 48 BTU/kw-h (50,600 J/kw-h), a large efficiency and cost penalty resulting from this inability to observe an excess in back pressure.

Another deficiency in the use of this method for air in-leakage indication is that there is an inherent delay between observing an identifiable back pressure rise and its earlier occurrence. By the time the in-leakage is recognized, large cost and performance penalties have already been incurred. To prevent the waste associated with increased heat rate, the in-leakage flow rate must be recognized at levels below the condenser threshold pressure at which the air in-leakage begins to contribute to the excess back pressure.

2.3.1.2 Rotameter Flow Rate Measurement

The rotameter, shown in Figure 2-21, has been used extensively as an inexpensive tool to measure the noncondensables being removed from the condenser vacuum space by attaching them to the vent or outlet side of exhausters. The rotameter can be used with all types of exhausters, including steam jet air ejectors, piston pumps, and LRVPs.

The operation of a rotameter is very simple. It consists essentially of a float that rises with increasing flow rate within a tapered tube that is oriented in a vertical position. As flow increases, the space between the float and tube wall increases, allowing more flow rate to pass, yet providing the same buoyancy. Because of this increasing gap between the float and tapered tube, the rotameter belongs to a class of instruments known as variable area (VA) meters. Markings on the tube at different positions give a measure of the flow rate, in units of SCFM, and are placed there from original direct calibrations. Design copies do not need individual calibration.

For power plant use, since vapor leaving exhausters is nearly always saturated, the instruments are calibrated using water-saturated air that is not condensing. An exception is the boiling water reactor (BWR) exhausters that require chilling of the exhauster vent gases to a 40°F (4.4°C) dew point. In the case of BWRs, a standard Rheotherm [14, 18] thermal type instrument has been used to measure air in-leakage at the exhauster vent since 1984. The rotameter is not generally used for BWR measurements because of the back pressure placed on the system during measurements (see below) and because it has no remote monitoring output capability.

The flow tube of the rotameter is approximately 1 inch (2.54 cm) internal diameter whereas the exhauster line is 6–8 inches (15.2–20.3 cm). The rotameter, therefore, is placed in a bypass configuration around a hand-operated flapper valve. A drain cock is provided in the lowest part of the rotameter inlet leg to drain the line of condensate prior to closing the main line valve when making flow measurements.



Figure 2-21
Rotameter Type Flow Meter

Under certain conditions, the rotameter provides an adequate flow rate measurement of the air and noncondensables leaving the exhauster. It is a requirement that the flow tube interior walls be clean. Debris, including dirt and rust particles, not only change the flow pattern but also restrict the flow, causing the float to generally read high. Also, contamination on the float can interfere with the float lift. Pulsations from the exhauster can cause the float to move from its equilibrium point and change slightly the imposed back pressure on the gas mixture. This, in turn, changes the mixture density that, for a mixture that is saturated, can cause precipitation of the water vapor, leading to a further decrease in density of the gas. These pulsations result in wild excursions of the float. The excursions can generally be eliminated by placing a hand over the exit from the rotameter and then slowly moving the hand away. It is generally believed that closing the flapper valve and directing the flow through the rotameter provides a back pressure

on the exhauster, decreasing its capacity. For this reason, there would be a decrease in the measured exhaust gases while taking a measurement.

The above are annoyances that some plant personnel have learned to overcome. There are, however, serious limitations that diminish the usefulness of rotameters in measuring air in-leakage, causing many to rely heavily on the previously discussed indicators of air in-leakage (see Section 2.3.1.1). Because of their limited range, generally not greater than 10:1, most problematic air in-leakages cause the rotameter to be pegged against the high level stop. If the upper limit of the instrument is below the exhauster capacity at the condenser hotwell vapor pressure and because of the uncertainty in recognizing a small excess back pressure rise (mentioned earlier), the operator can be blind regarding the level of air in-leakage and whether the heat rate is affected.

Another limitation is that most exhauster outlets are not only saturated but the mixture entrains a varying amount of water mist. The result is that there is a flow of water that coats the walls of the flow tube and float, interfering with instrument accuracy. Further, the instrument output will fluctuate over a period of one hour by a factor of two or more. The observed variations generally have not been tied to other known variations within the condenser system, making measurement interpretation more difficult.

It is generally understood that a rotameter is a good indicator of a high or low amount of air removal. The determined value of the measurement can be improved if approximately 10 readings are taken over a one-hour period and the measurements averaged while other operating conditions remain relatively constant.

2.3.2 Vacuum Line Measurement

The measurement of air in-leakage into the vacuum line between the condenser and the exhauster was attempted using different methods in 1990 [16] and in 1992 [17]. The earlier work used a Rheotherm thermal type instrument responsive to the total mass of gas mixture flowing in the line. As mentioned in the introduction, this measurement was responsive to the flowing gases, but it was unable to distinguish between water vapor and air, therefore requiring the user to interpret the data. It did, however, serve the purpose of identifying and helping to find leaks. The results initiated a project using multiple measurements to solve the problem of differentiating the two gases and separating them for appropriate quantification.

In the second method [17], the developers incorporated a flow meter, a pressure sensor and a temperature sensor on the tip of an insertable probe. The electronics processor made use of these three measurements and steam table data [21] under the assumption that the gas mixture was always saturated. Under conditions when the mixture was not saturated, the assumption of saturation could cause computational error and loss of output signal.

2.3.2.1 Features of Multisensor Probe

The multisensor probe (MSP) is installed in the vacuum line. This instrument has features uncharacteristic of any other flow meter, such as its ability to directly measure the mass properties of gas in the vacuum line, as well as computed parameters based on thermodynamics. It is a gas analyzer and total mass flow meter having the components shown in Figure 2-22, although its microprocessor-based signal processing unit is not shown. It uses a local standard velocity-measuring device, the measurement of temperature, pressure, and relative saturation, together with the pipe diameter, from which it is able to separate noncondensable gas from water vapor and compute individual and combined properties of the gas mixture. As a result, the following parameters of the gas flowing in the exhauster suction line are either directly measured or determinable:

- Air in-leakage, SCFM
- Volumetric flow, ACFM[**]
- Total mass flow, lb/h (kg/h)
- Water vapor mass flow, lb/h (kg/h)
- Water vapor/air mass ratio (relative saturation, %)
- Water vapor density, lb/ft^3 (kg/m^3)
- Air density, lb/ft^3 (kg/m^3)
- Partial pressure of water, in. HgA (kPa)
- Partial pressure of air, in. HgA (kPa)
- Total pressure, in. HgA (kPa)
- Temperature, F (C)

[**] ACFM is actual cubic feet per minute at operating conditions. Because not all countries convert ACFM to SI units in the same way, these measurements were intentionally not converted to SI units to avoid confusion.

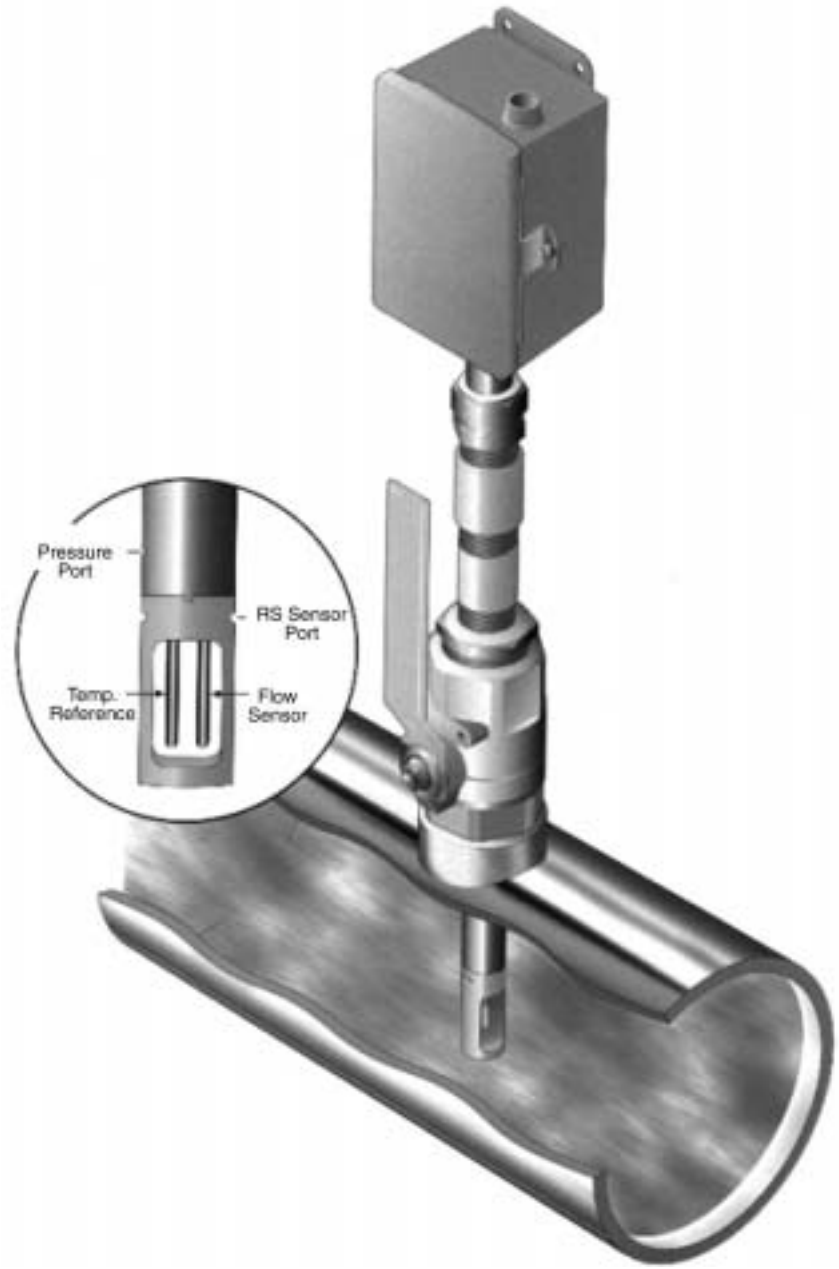

Figure 2-22
Multisensor Probe

The use of most of these parameters is discussed in the instrument manual. MSPs are calibrated in a dynamic environment nearly identical to that found in an operating station. There is no need to perform field adjustments on the instrument after its installation. One instrument model is equipped with the feature of being able to transmit data to the manufacturer's troubleshooting and service organization, either by phone-modem or the Internet. This minimizes equipment downtime as well as the time of response. The design allows for fast replacement or repair service.

Finally, the power of the MSP instrument and its service infrastructure appears to match the needs of modern plant control and information management systems, consistent with their demand for still more reliable and sensitive sensors for the monitoring and measurement of energy-related conversion processes.

2.3.2.2 Benefits from the Use of the Multisensor Probe Monitor

Air in-leakage in SCFM units measured by the MSP monitor is the sum of all leak sources entering the subatmospheric pressure system and subsequently flowing through the exhauster line upstream of the sensor location. It does not measure air entering the low-pressure system beyond (that is, downstream of) the sensor location, such as at valves, input connections, and even shaft seals in the case of LRVP exhausters. It does, however, measure the exhauster capacity both in volumetric units (ACFMs) or mass units (lb/h or kg/h). The advantage here is that it becomes a measurement of exhauster capacity, that is, the ability of the exhausters to remove the gas mixture from the condenser. This capacity is reduced under these conditions:

- If the suction side coupling or seals of the exhauster have leaks
- If there is a degradation of the steam flow nozzle (in the case of a steam jet air ejector)
- If there is a damaged rotor (in the case of an LRVP)

The two MSP measurements (SCFMs of air and ACFMs of mixture) are independent of each other. The SCFM measurement can be high or low without grossly affecting ACFM and vice versa. Should an event occur under otherwise nominal operating conditions, causing excess turbine back pressure to be experienced, the attention of operations and maintenance personnel is promptly directed toward the condenser or the exhauster because a high SCFM measurement means excessive air in-leakage, while a low ACFM means exhauster degradation. On observing a rise in back pressure, if the air SCFM and mixture ACFM are normal then the implication is that condenser tube fouling is responsible and that the terminal temperature difference (TTD) should be examined for the anticipated increase. The parameters used in the above evaluation and comparison are more appropriate to a piston pump or LRVP exhauster. For steam jet air ejectors, the total mass flow and air SCFM data are more appropriate.

Examination of the measured air in-leak data from the installed probes will provide information on the likely locations of the leaks. Table 2-1 shows the combinations of indications that can be expected for the locations of different leaks, while Table 2-2 shows some examples of observed MSP monitor air in-leak data and identification of leak presence and leak location determinations.

Table 2-1
Examples of a Five-Probe Air In-Leak Measurement System

Leak Location	Probe Indications of Air In-Leak (SCFM) and Plant Dissolved Oxygen (DO)
Below water line, left side of condenser	Much higher than normal DO, 1 > 2, 1 + 2 = 3 = 4 + 5, 4 = 5
Above water line, right side of condenser	Slightly higher or normal DO, 2 > 1, 1 + 2 = 3 = 4 + 5, 4 = 5
Small leak or faulty exhauster down stream of probe 4	Slightly higher or normal DO, 1 = 2, 1 + 2 = 3 = 4 + 5, 4 < 5
Large leak or failed exhauster down stream of probe 4	Slightly higher or normal DO, 1 = 2, 1 + 2 = 3 < (4 + 5), 5 > 4 (back flow at 4)
Center joint seal, LP bearing seal, or other central location	Slightly higher or normal DO, 1 = 2, 1 + 2 = 3 = 4 + 5

Table 2-2
MSP Probe Indications for Various Probe Positions

Leak Location	Probe Indications of Air In-Leak (SCFM)
Normal tight system	1 = 2.5 SCFM 2 = 2.5 SCFM 3 = 5 SCFM 4 = 0 SCFM (exhauster 2 not in service) 5 = 5 SCFM
Abnormal, need to locate and fix leaks (central joint seal)	1 = 15 SCFM 2 = 18 SCFM 3 = 33 SCFM 4 = 16.5 SCFM 5 = 16.5 SCFM
Abnormal, need to locate leaks and fix Nash pump shaft seal in exhauster 2	1 = 20 SCFM 2 = 20 SCFM 3 = 40 SCFM 4 = 20 SCFM (Differences due to reversed flow 5 = 60 SCFM through shaft seal being sensed)

Evaluation and analysis of condenser system performance and measurement of in-leakage is best accomplished with the use of an instrument installation consisting of five MSP probes. Figure 2-23 shows the recommended probe locations for a typical small condenser system. Each probe is identified by a number that is used in identifying performance information, as shown in Table 2-1. The advantages of using the five-probe set-up are the ease in collecting data and the relatively small amount of time required to identify the search area when a leak occurs.

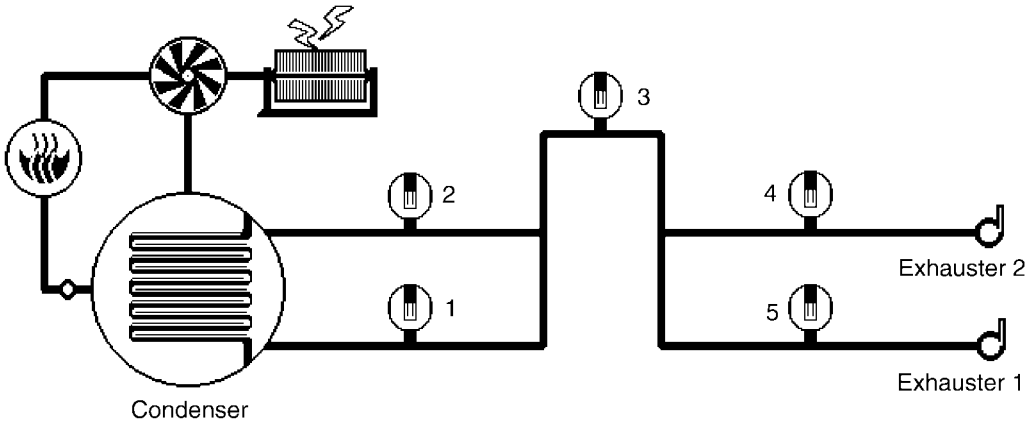

Figure 2-23
Multisensor Probe Instrument Schematic

2.3.3 Dissolved Oxygen

There are three major types of dissolved oxygen sensors, based respectively on the galvanic, polarographic, and equilibrium principles.

2.3.3.1 Galvanic Principle

The earlier instruments for the on-line measurement of dissolved oxygen were based on this principle. One form of the instrument took a sample of the feedwater and removed a portion of the dissolved oxygen from the sample by scrubbing it with hydrogen. The proportion of air in the hydrogen/air mixture was determined by measuring the thermal conductivity of the mixture and comparing it with a reference sample of pure hydrogen.

2.3.3.2 Polarographic Principle

The sensors for the dissolved oxygen monitors based on the polarographic principle can be mounted either in-line or in a flow chamber. The sensor is constructed of two noble metal electrodes immersed in an electrolytic solution; the electrodes are separated from the sample of interest by a gas-permeable membrane. An electrical potential is applied between the electrodes to reduce any oxygen that is driven through the membrane by a partial pressure gradient. This results in the creation of a proportional current that can be scaled, displayed on an instrument, and/or converted into analog and digital outputs.

Instruments of this type depend on a constant and continuous transfer across the membrane and in only one direction. Further, the corrosive byproducts of the electrochemical reaction require that the electrode be serviced periodically to ensure a reliable measurement.

2.3.3.3 Equilibrium Principle

Dissolved oxygen sensors designed on the equilibrium principle maintain an equal partial pressure of oxygen both inside and outside the probe. When the probe is immersed in a sample, oxygen penetrates the membrane and is reduced at the cathode. The current necessary to reduce this oxygen is converted by the analyzer to the concentration of dissolved oxygen in the solution. Simultaneously, the anode generates an equal amount of oxygen, and this reaction continues until the partial pressures of oxygen on both sides of the membrane are reestablished, or come into equilibrium. The electrochemical reactions are as follows:

At the cathode: $O_2 + 4H^+ + 4e^- = 2H_2O$

At the anode: $2H_2O = O_2 + 4H^+ + 4e^-$

With this zero net reaction, nothing is consumed and nothing needs to be replaced. The design thus results in a reliable measurement that is completely independent of process flow and, according to the manufacturers, requires no internal probe maintenance.

2.3.4 Conductivity

The quantity and nature of the dissolved solids present in boiler feedwater will affect its conductivity, expressed in microsiemens/cm (µS/cm). The probe is normally immersed in the stream whose conductivity is to be measured and consists of a body made either from a loaded epoxy resin or from type 316 stainless steel. Carbon electrodes are usually associated with the resin bodies, while stainless steel or naval brass electrodes are associated with the stainless steel bodies. Electrodes made from titanium or monel have also been used. Cells are designed with calibration constants of 0.05, 0.1, or 1.0, depending on the range of conductivity to be measured as well as the sensitivity of the sample to measurement (for example, ultra-pure water requires a cell constant of 0.05).

Note that conductivity varies with the temperature of the sample. Thus, to be able to compare readings, the conductivity as measured must be corrected for the sample temperature. For this reason, a temperature probe is invariably included in the conductivity measurement system.

To measure conductivity, an electrical potential is applied to the probe. Originally, the conductivity or resistivity of the sample was measured using a Wheatstone Bridge. Today, the conductivity or resistivity is measured and displayed electronically.

2.3.5 Salinity

Salinity is the total amount of dissolved salts in water, expressed as grams of salts per kilogram of water or as parts per thousand. Meanwhile, conductivity is usually stated in the units of

microsiemens or micro-mhos and is used to approximate the total dissolved solids content of water. In fact, instruments used for measuring salinity are usually conductivity meters that have been specially calibrated. For instance, water with 100 mg/l of NaCl has a conductance of 212 (µS/cm). Salinity cells are rugged, reliable, and comparatively inexpensive, but have two major drawbacks. First, they are accurate only for plants experiencing brackish water in-leakage. Second, metal salts other than NaCl can affect conductivity together with the associated calibrated value of salinity. Thus, while a change in salinity (or conductivity) will indicate condensate contamination, the actual species will have to be determined from wet chemistry analysis.

2.3.6 pH

The measurement of sample conductivity alone is nonspecific and cannot distinguish among acids, bases, and salts. In cycle chemistry, an additional measurement is required to help in identifying the source of any water contamination and to control the levels of ammonia or amine used for water treatment This additional measurement is the pH of the solution and the pH vs. conductivity relationship has been documented in graphic form for a number of strongly ionized acids and bases and for weakly ionized carbon dioxide and ammonia, which are typically found in boiler feedwater.

However, the measurement of pH is a very specialized topic, and this section merely outlines the measurement principles involved. It is recommended that manufacturers be approached for more detailed information

The measurement of the pH of a sample is a measure of its acidity but, more specifically, of the concentration of the hydrogen ions present in the sample. All but a small fraction of water exists in a molecular state, but a little ionizes in the following way:

$$H_2O \leftrightarrow H^+ + OH^-$$

If concentrations are expressed as gram ions per liter, the product of the hydrogen ion and hydroxyl ion concentrations is constant for any particular temperature. For example, at 25°C:

$$[_2H^+] * [OH^-] = 10^{-14} \text{ (approximately)}$$

If $[H^+]$ denotes the concentration of hydrogen ions, then the corresponding pH value may be determined from:

$$pH = - \log_{10}[H^+]$$

On this basis, a 5% sulfuric acid solution will contain 1 gram ion per liter (pH = 0), while a 4% caustic soda solution will contain 10^{-14} gram ions per liter (pH = 14). With pure water, there is an equal concentration of both hydrogen and hydroxyl ions so that the pH of pure water is 7.

The pH of a solution can be estimated colorimetrically by adding a small quantity of a specific dyestuff, called an indicator. A reaction occurs between the indicator and the hydrogen ions in the sample, resulting in a color change. A comparison of the color with a permanent color

standard is used to estimate the pH value of the sample. This, of course, is the method commonly used to test the water in swimming pools.

The instruments used for industrial purposes are based on a potentiometric principle; pH is measured as a millivolt signal developed at the surface of a glass electrode membrane. The signal depends on the glass/solution ionic equilibrium. The system consists of both a measurement and a reference electrode, while a temperature compensator is also needed. In some systems, the measurement and reference electrodes are combined into a single combination probe.

The inside of the glass measurement electrode is filled with a stable pH solution, containing potassium chloride that maintains a constant potential in contact with the inner element.

Sealed reference electrodes, which require no refilling with electrolyte, are usually satisfactory for cooling, service, waste, or other waters of relatively high conductivity. Other designs include a flowing junction electrode in which the electrolyte solution is continuously being replenished from a reservoir. The most critical part of the electrode circuit is the reference junction where the potassium chloride electrolyte inside the electrode has contact with the process sample. This junction is a narrow passage usually made of porous ceramic or plastic. The purpose is to provide electrical continuity without introducing a voltage contribution of its own.

The electrodes are usually mounted in a conductive (for example, stainless steel) flow chamber that has been grounded to earth. This not only protects the signal from external electrical noise but also from internally generated streaming potentials. The pH signal is the potential generated across the high impedance measurement and reference electrodes, and since the signal is a very low voltage, it requires the use of coaxial cables and, preferably, preamplifiers located near the electrodes to minimize the length of high impedance lead wire.

The voltage produced at the pH membrane surface is proportional to absolute temperature as well as pH. Thus, all pH measurements require electrode temperature compensation to offset the Nernst effect. This compensation translates the millivolt electrode signal into pH at the process temperature. Meanwhile, cycle chemistry guidelines for pH are referenced to 25°C and requires the additional step of solution temperature compensation.

The ultimate pH standards are the Standard Reference Materials from NIST [18]. Any commercial buffer solution should be traceable to these, with a known tolerance and table of pH values versus temperature.

2.4 References

1. *ABCs of Condenser Technology*. EPRI, Palo Alto, CA: August 1994. Report TR-104512.

2. *Standards for Steam Surface Condensers, Ninth Edition*. Heat Exchange Institute, Cleveland, OH: 1995.

3. *ANSI/ASME Performance Test Code for Steam Condensers*. ASME, New York. ANSI/ASME PTC.12.2-1983.

4. J. Harpster, D. Molner, and D. Thompson, "Advances in Air Inleak Measurement," presented at Power-Gen Americas Conference, Orlando, FL (December 7–9, 1994).

5. Richard E. Putman and Mark J. Hornick, "Using Turbine Thermal Kit Data to Benchmark Condenser Performance Calculations," *Proceedings of the International Joint ASME/EPRI Power Generation Conference (IJPGC)*, Baltimore, MD (August 1998). ASME, New York.

6. Richard E. Putman and Dale C. Karg, "Monitoring Condenser Cleanliness Factor in Cycling Plants," *Proceedings of the International Joint ASME/EPRI Power Generation Conference (IJPGC)*, San Francisco, CA (July 26–29, 1999). ASME, New York.

7. *Performance Test Code on Steam Surface Condensers*. ASME, New York. ASME PTC.12.2-1998, 1998.

8. Donald Q. Kern, *Process Heat Transfer*. McGraw Hill, New York 1990.

9. F. Maner and J. Harpster, "Performance Improvement Based on Measurement and Management of Air Inleak," presented at the EPRI Condenser Technology Conference, Charleston, SC (September 1–3, 1999).

10. C. L. Henderson and J. M. Marchello, "Film Condensation in the Presence of a Non-Condensable Gas," *Journal of Heat Transfer*. Vol.91, pp. 447–450 (August 1969).

11. J. Harpster, to be published.

12. Richard E. Putman, "Performance Monitoring of Three-Compartment Condensers in Nuclear Plants," presented at the EPRI Nuclear Plant Performance Improvement Seminar, San Antonio, TX (August 23–24, 1997).

13. F. Maner and J. Harpster, "Performance Enhancement with Remote Monitoring of Condenser Air In-leakage," presented at the Power-Gen International Conference, New Orleans, LA (November 30–December 2, 1999).

14. J. Harpster, R. Maston, and J. Stump, "Advancements in Air In-leak Measurement," presented at the EPRI Nuclear Plant Performance Improvement Seminar, Charleston, SC (August 2, 1994).

15. R. Swanekamp "United It Stands, Divided It Falls," *Power*, March/April, 1999.

16. “Rheotherm Instruments at Dayton Power and Light,” Intek, Inc. Test Report, 1991.

17. J. Ferrison, P. Baller, and W. Ray, “An Air Ingress Monitor for Turbine Condensers – Its Development and Validation,” presented at the EPRI/ASME Heat Rate Improvement Conference, Birmingham, AL (November 1992).

18. Certificates for Standard Reference Materials 185-192, National Institute of Standards and Technology, Gaithersburg, MD.

19. *Standards for Steam Jet Vacuum Systems, Fourth Edition*. Heat Exchange Institute, Cleveland, OH 1995.

20. J. Harpster, B. Harpster, and F. Maner, “Optimizing Station Performance,” Clearwater Beach, FL, (June 7–10, 1999).

21. *Standards for Steam Surface Condensers, Eighth Edition*. Heat Exchange Institute, Inc., Cleveland, OH 1989.

2.5 Nomenclature

The equations found in Section 2 use the following nomenclature. The constants within these equations are correct when these units are used. Therefore, conversion to SI units is not appropriate here.

A	=	Tube surface area	sq. ft
C_p	=	Specific heat of water at bulk temp.	BTU/lb.F.
d_i	=	Inside diameter of tube	inches
d_o	=	Outside diameter of tube	inches
D_o	=	Outside diameter of tube	feet
g	=	Acceleration due to gravity .	= 417E+06 (ftlb. mass)/(hr^2.lb force)
G	=	Cooling water flow	GPM
h	=	Heat transfer coefficient	BTU/(sq.ft.h.Deg.F)
h_f	=	Steam side heat transfer coefficient	BTU/(sq.ft.h.Deg.F)
k	=	Thermal conductivity of water film	BTU/(h.ft.Deg.F)
k_m	=	Thermal conductivity of metal	BTU/(h.ft.Deg.F)
k_f	=	Thermal conductivity of cond. film	BTU/(h.ft.Deg.F)
L	=	Tube length	feet
LMTD	=	Log mean temperature difference	Deg. F
m	=	Rate of condensation per unit area	lb/(h.sq.ft)
M	=	Mass flow	lb/h
N	=	Number of tubes	
N_{pass}	=	Number of passes	
q	=	Heat flux	BTU/h
Nu	=	Nusselt Number	(dimensionless)

Pr	=	Prandtl Number	(dimensionless)
Re	=	Reynolds Number	(dimensionless)
R_f	=	Steam side film resistance	Deg.F/(BTU/h.sq.ft)
R_{foul}	=	Fouling resistance	Deg.F/(BTU/h.sq.ft)
R_t	=	Tube side film resistance	Deg.F/(BTU/h.sq.ft)
R_w	=	Wall resistance	Deg.F/(BTU/h.sq.ft)
T_b	=	Bulk water temperature	Deg. F
T_c	=	Condensate film temperature	Deg. F
T_v	=	Vapor temperature in shell	Deg. F
T_{in}	=	Cooling water inlet temperature	Deg. F
T_{out}	=	Cooling water outlet temperature	Deg. F
T_{wo}	=	Temperature of tube outer surface	Deg. F
U	=	Overall heat transfer coefficient	BTU/(sq.ft.h.Deg. F)
V	=	Water velocity	fps
W	=	Exhaust flow per tube foot	lb/(h.ft)
λ	=	Latent heat of condensation	BTU/lb
μ	=	Viscosity of water at bulk temp.	lb/(h.ft)
μ_f	=	Viscosity of condensate film	Deg. F
ρ	=	Liquid density	lb/cu.ft

3
SHELL SIDE AIR-REMOVAL EQUIPMENT PERFORMANCE

The first part of this section examines the performance criteria and related diagnostics for steam jet air ejector (SJAE) systems for removing air and other noncondensables from the shell side of a condenser. Section 3.5 is concerned with the performance of liquid ring vacuum pumps (LRVPs), the other major type of prime mover for steam surface condenser air-removal systems.

3.1 Steam Jet Air Ejector Performance and Diagnostics

3.1.1 Historical Background

Steam jet air ejectors have been used since at least the turn of the century to maintain high vacuum in steam condensers (Parsons). Although Royds and Johnson [1] refer to earlier work in the U.K. presented in papers by Third (1927) and Watson (1933), their own paper seems to be the first significant contribution to the development of a theory of operation for steam jet ejectors. They explored the effect on performance of different combinations of nozzle and diffuser shapes, the effect of the distance between the nozzle and the surface of the inlet cone, the pressure profile along the diffuser, ejector efficiency, and other related topics.

In 1941, Flugel [2,3] outlined a theory of jet pumps that seems to have been the basis for the work of several other investigators. In the U.S., Keenan and Neumann [4] presented their own theory of ejectors in a 1942 paper, which they developed further in 1950 [5]. They identified the pressure shock waves that occur as the velocity of the steam transfers from supersonic to subsonic and also showed how the maximum steam/air flow ratio changes with the position of the nozzle.

Elrod [6] built on Flugel's work as well as on Keenan's earlier paper and examined the contribution of pressure shock to ejector instability. He compared the results from his theory of steam jet ejectors with the experimental work of others and stated: “qualitative agreement was always excellent; and quantitative agreement has usually been satisfactory.”

In 1956, ASME published the first version of their *Code on Ejectors* [7], and it was not until 1988 that the Heat Exchange Institute (HEI) published their own first edition of *Standards for Steam Jet Vacuum Systems* [8]. Both standards apply to steam jet ejectors for the process as well as power industries and were designed to provide standard methods for specifying and testing steam jet ejector systems. The information in these two documents overlaps, but the HEI Standard also contains information concerning the construction of the SJAEs and associated pressure vessels.

Finally, recognizing that both the temperature and the molecular weight of the entrained fluid have a significant effect on steam jet ejector performance, the HEI sponsored a program of research into these areas, the results from which were presented in 1951 in papers by Holton and Schulz [9,10]

3.1.2 Standard HEI Nomenclature for SJAEs and Associated Equipment

Section 2 introduced the fundamental construction of a steam jet air ejector and some of the basic configurations in which ejectors and their auxiliary equipment can be arranged. Figure 3-1 shows typical nomenclature for assigning symbolic names to trains of ejectors and condensers, taken from the HEI Standards on SJAEs [8]. First, each steam jet air ejector is assigned a letter symbol, in this case one of the letters U through Z. For a precondenser located ahead of, say, ejector Y (Figure 3-1A), the precondenser is assigned the name PY. For an aftercondenser following ejector Z, the aftercondenser is assigned the name ZA. For a condenser located between two ejectors, say, X and Y (Figure 3-1B), the intercondenser is assigned the name XY.

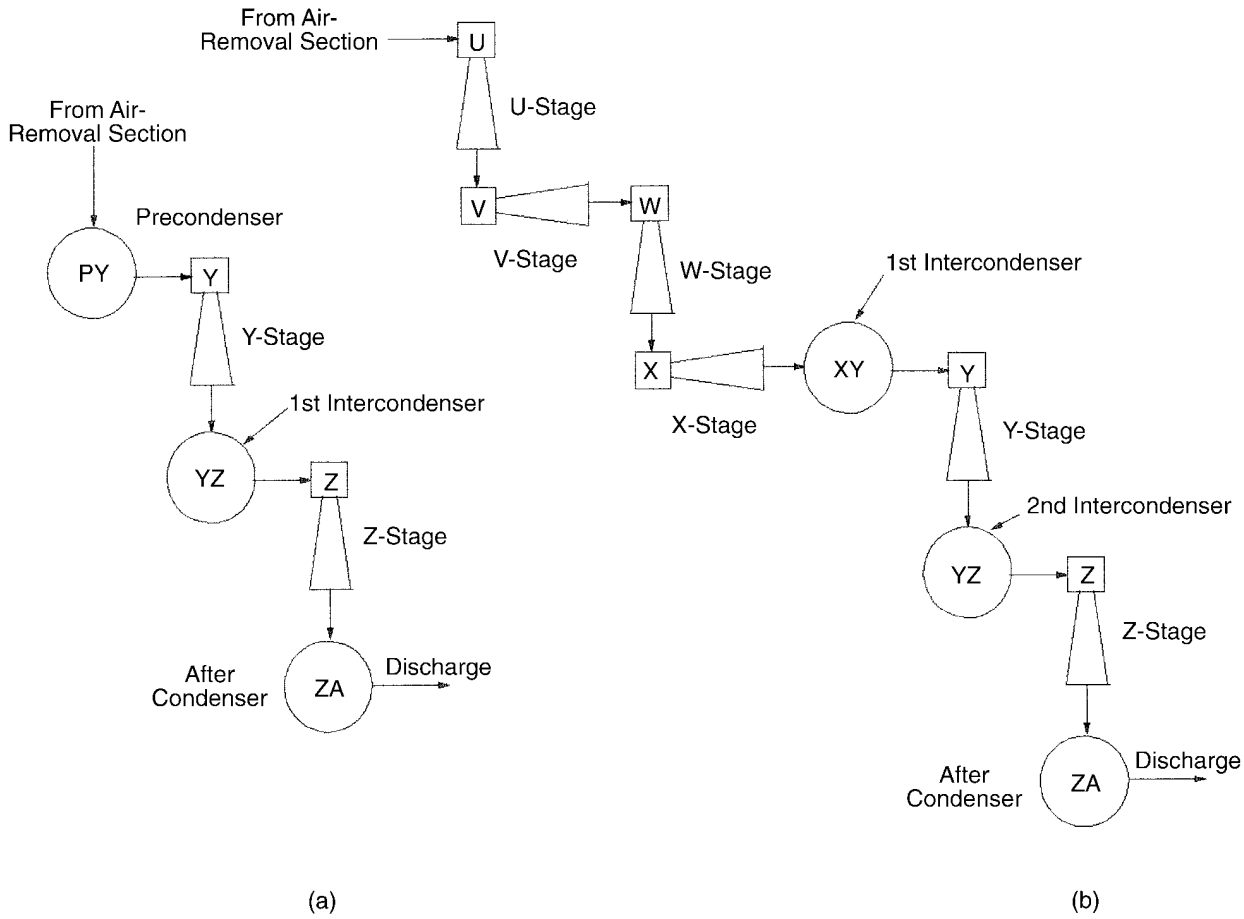

Figure 3-1
Two-Stage and Six-Stage Ejector Systems

3.1.3 The Mollier Diagram and the Behavior of Steam Jet Air Ejectors

Royds and Johnson [1] described the operation of steam jet air ejectors (SJAE) with reference to the Mollier diagram [11], as shown in Figure 3-2. As will be seen from the construction of a steam jet ejector shown in Figure 2-12, the motive steam expands through a nozzle and entrains the air/vapor mixture containing the noncondensables. In steam ejectors used in the power industry, the pressure of the air/vapor mixture drawn from the condenser is almost always less than 0.55 times the motive steam pressure so that the flow through the nozzle is always critical (See Section 3.1.4.1 below). As the expanded motive steam and the entrained air/vapor mixture enter the diffuser, the velocity falls and a recovery of pressure occurs.

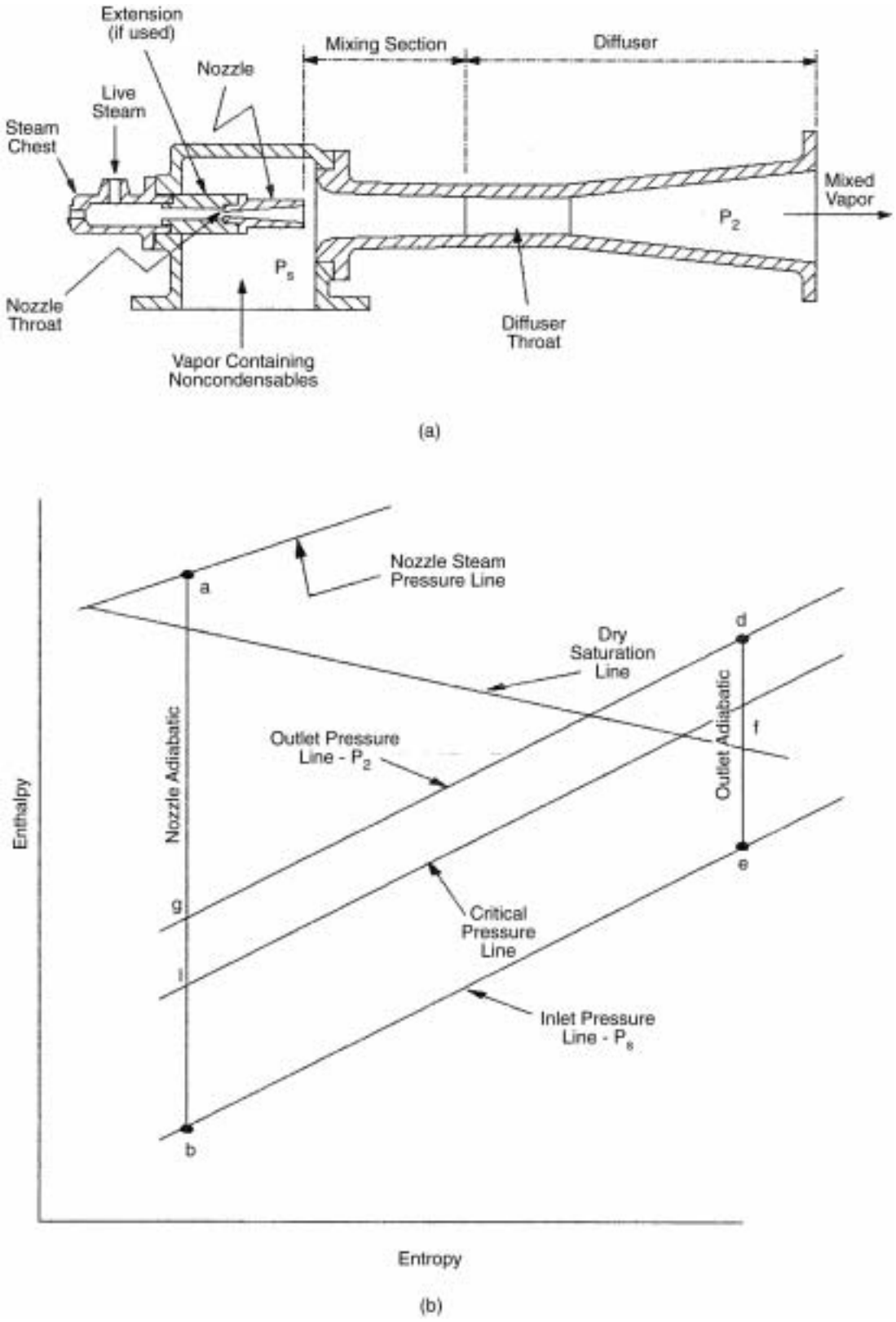

Figure 3-2
(a) Typical Steam Jet Ejector Stage Assembly, (b) Mollier Diagram for SJAE

The properties of the motive steam are those at point *a*. The steam expands adiabatically through the nozzle along line ab, passing through the critical pressure at point l (and expands further, down to the pressure at the air/vapor mixture inlet, point b. As the velocity falls in the diffuser, pressure is recovered and the properties of the air/steam mixture leaving the ejector are denoted by point d.

This diagram is of interest in providing an understanding of the concept of ejector efficiency. Let:

m_s = motive steam flow rate through nozzle
m_a = mass flow rate of air and vapor mixture entrained in the motive steam
H_a = enthalpy of motive steam at ejector inlet
H_b = enthalpy of motive steam at air/vapor inlet
H_d = enthalpy of steam/air mixture at ejector outlet
H_e = adiabatic enthalpy of steam/air mixture leaving ejector corresponding to entropy at ejector outlet
η = ejector efficiency

The enthalpy difference ($H_a - H_b$) represents the adiabatic heat drop due to the expansion of the motive steam down to the pressure at the air/vapor inlet: while the enthalpy difference ($H_d - H_e$) represents the heat recovered as the velocity falls and the pressure rises to the outlet conditions. The ejector efficiency can be calculated from:

$$\eta = \frac{H_d - H_e}{H_a - H_b} \quad \frac{m_s + m_a}{m_s} \qquad \textbf{Eq. 3-1}$$

3.1.4 Steam Jet Air Ejector Performance

The performance of a steam jet air ejector can be evaluated with respect to at least four criteria:

- The flow of steam through the nozzle
- The motive/load ratio
- The ratio of the pressure of the entrained fluid and the pressure at the discharge from the ejector (that is, the compression ratio, see Section 2.2.2)
- The efficiency of the ejector

3.1.4.1 Flow of Steam Through Nozzle

Assuming that the flow, pressure, and temperature of the steam supplied to the nozzle is being measured and that the source of steam is superheated, the following flow calculations apply. There are two cases: 1) subcritical flow and 2) critical flow.

The flow is critical flow if:

$$P_2 \leq P_1 \left(\frac{2}{\gamma+1}\right)^{\frac{\gamma}{\gamma-1}} \qquad \textbf{Eq. 3-2}$$

A close approximation is that the flow is critical if P_2 is less than 55% of P_1.

Subcritical Flow – ($P_2 > 0.55 * P_1$)

$$m = \frac{kF_a C_d^{\,2} Y_a}{(1-\beta^4)^{0.5}} [\rho(P_1 - P_2]^{0.5} \qquad \textbf{Eq. 3-3}$$

Table 3.0 in the ASME Standard [7] gives the value of Y_a for various combinations of β and r.

Critical Flow – ($P_2 \leq 0.55 * P_1$)

In this case,

$$m = kF_a C_d^{\,2} Z(\rho_1 P_1)^{0.5} \qquad \textbf{Eq. 3-4}$$

where:

Symbol	Description	English Units	SI Units
C	Discharge coefficient		
C_p	Specific heat at constant pressure		
C_v	Specific heat at constant volume		
D	Diameter of pipe at upstream section	in.	cm
d	Diameter of orifice in nozzle	in.	cm
k	Constant – value according to unit system	1890	3960
m	Flow rate	lb/h	kg/h
P_1	Nozzle upstream static pressure	psia	kg/cm^2
P_2	Nozzle downstream static pressure	psia	kg/cm^2
r	P_2/P_1		
γ	Ratio of specific heats = Cp/Cv		
ρ	Density	lb/cu.ft	gm/cc
β	Ratio of nozzle orifice diameter to pipe inside diameter, or β = d/D		
Y_a	Expansion factor at subcritical conditions		
Z	Expansion factor at critical flow conditions		
F_a	Area multiplier for thermal expansion of nozzle		

The value of Z for various values of γ and β can be obtained from Figure 10 of the HEI Standard [8].

3.1.4.2 Motive/Load Ratio

The required motive steam flow for a given air load (as specified in the HEI *Standard on Steam Surface Condensers*) dictates the nozzle and diffuser dimensions. The design details are determined according to the experience and research of the manufacturer and are difficult to determine from theoretical considerations only.

A typical performance curve for a two-stage SJAE is shown in Figure 3-3. This shows the dry air equivalent (DAE) flow rate (lb/h or kg/h) versus suction pressure for an SJAE with a nominal capacity of 30 SCFM (135 lb/h [61 kg/h] of air and 297 lb/h [135 kg/h] of water vapor). In fact, at the design conditions and with a motive steam pressure of 300 psig (21 kg/cm^2), the nozzle steam flow required is 708 lb/h (321 kg/h). Thus, the motive to load ratio = 708 / (135 + 297) = 1.64 [or 321 / 61 + 135) = 1.64].

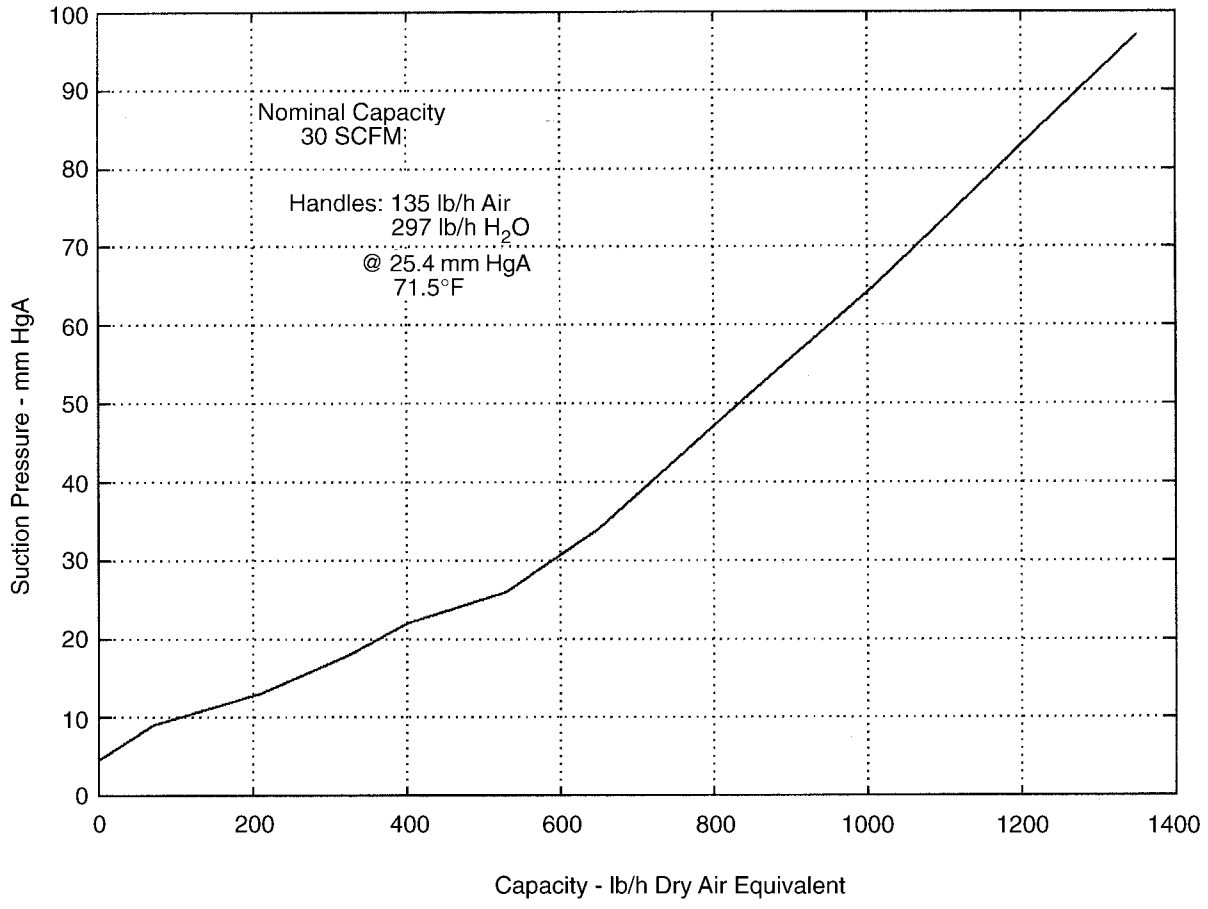

Figure 3-3
Typical Steam Jet Air Ejector Performance Curve
(Courtesy of The Nash Engineering Company)

In accordance with the HEI Standard, steam jet air ejectors are tested to meet the "70°F Air Equivalent" (also known as dry air equivalent (DAE)). A temperature entrainment curve is used to make this conversion (See Figure 15 [8]) for both air and steam.

With mixtures of air and steam, the DAE flow rate of each constituent is determined and they are then added together to determine the total flow rate. The example given in the HEI Standard [8] is for 660 lb/h of mixture consisting of 200 lb/h air and 460 lb/h of steam at 400°F. Using the temperature entrainment curve of Figure 15 [8], at 400°F the entrainment ratio for air is 0.921 and that for steam is 0.892. The molecular weight entrainment ratio for steam is 0.81. Thus:

DAE of air component	= 200/0.921	= 217 lb/h
DAE of steam component	= 460/(0.892 * 0.81)	= 637 lb/h
	DAE of mixture	= 854 lb/h

An alternative method of establishing the DAE of an air/steam mixture is to refer to Figure 17 [8]. In the above example, the percent air in the mixture is 200/660 = 30.3%. From Figure 17, at a temperature of 400°F and 30.3% air in the mixture, the entrainment ratio is given as 0.773. Thus the DAE of 660 lb/h of this mixture is:

660/0.773 = 854 lb/h

3.1.4.3 Compression Ratio

The compression ratio (see Equation 2-8) for an SJAE system depends on the number of stages. The design details are again determined according to the experience and research of the manufacturer and are difficult to determine from theoretical considerations only. The compression ratio will vary with the motive steam flow rate and the stability of operation must be taken into account (See Section 2.2.2 and Equation 2-8).

3.1.4.4 Ejector Efficiency

If the pressure and temperature of the steam are known at the motive steam inlet and ejector outlet, together with the pressure at the air/vapor inlet, the efficiency can be calculated using the Mollier diagram as discussed above.

3.2 Troubleshooting

For each steam jet air ejector, the maximum discharge pressure at the vent of the aftercondenser, must be specified, as well as any vent temperature limits. It is important that the steam be dry and contain no moisture to avoid ejector erosion. The minimum pressure and temperature of the steam supply to the steam chest inlets on the ejector nozzles must also be specified. If the steam pressure drops below this minimum, the vacuum system can become unstable.

It is recommended that the criteria specified in the following subsections be used when troubleshooting these systems [12].

3.2.1 Poor Vacuum

Poor condenser vacuum can be the result of deviations in one or more operating parameters:

- Low steam pressure
- Superheated steam
- Nozzle orifice area different from design
- Total condenser air in-leakage
- Loop seal drain too short
- Excessive discharge pressure on atmospheric stage
- Poor main condenser operation
- Leaking air inlet isolation valves

3.2.1.1 Low Steam Pressure

Each ejector nozzle is specially designed for the steam pressure specified for the application. If the pressure is less than design, the system cannot achieve the desired vacuum, and the following should be checked:

- Compare the steam pressure at the inlet to the ejector steam chest with the rated pressure. If it is not possible to increase the supply steam pressure, check with the manufacturer for possible nozzle changes to allow for the lower steam pressure.
- Check whether there are any obstructions in the steam supply system that might be causing the low pressure.
- Check whether any pressure-reducing valve in the system is functioning correctly.

3.2.1.2 Superheated Steam

Mass flow through a given nozzle is less for superheated than for saturated steam. Note that saturated steam passing through a pressure-reducing valve will become superheated. Steam supplied to a steam jet air ejector should never contain moisture because this can cause erosion as well as performance problems. If the motive steam is not dry saturated but is superheated, the ejector manufacturer should be alerted so that the design of the SJAE can be adjusted to meet this steam condition.

3.2.1.3 Clogged Nozzle Orifices

Small nozzles designed for high steam pressures are more apt to become clogged than those designed for lower pressures. Properly designed steam ejectors will allow the steam nozzle to be cleaned in place. An alternative method is to remove the entire steam chest assembly. Then remove the plug located on the steam chest and blow out any chips or scale from the nozzle end.

3.2.1.4 Total Condenser Air In-Leakage

Check the main condenser air in-leakage with the instrument provided on the discharge of the after-condenser. If air leakage is excessive, check the vacuum system for tightness (see Section 11).

3.2.1.5 Loop Seal Drain Too Short

Condensate drain lines and loops seals must be properly designed to prevent short circuiting of the air between the main turbine condenser and the intercondenser.

3.2.1.6 Excessive Discharge Pressure on Atmospheric Stage

Excessive discharge pressure on any ejector stage can cause unstable operation. Starting at the final ejector stage, discharge pressures should be checked and compared with design.

3.2.1.7 Poor Main Condenser Operation

When condenser equipment has been in operation for extended periods of time, deterioration in performance is often attributed to the ejector vacuum system. However, the main turbine condenser may itself be the source of the problem. Some of the possible causes include high cooling water temperature, insufficient cooling water flow, or excessive fouling of the condenser tubes.

3.2.1.8 Leaking Air Inlet Isolation Valves

In a twin-element SJAE, poor condenser vacuum can result when SJAE performance is degraded because of leakage through a seemingly closed first stage air inlet valve. This leakage causes a recirculation flow to occur between the two elements and so reduces the overall efficiency of the SJAE. If the other and previously open air inlet valve is found to be leaktight when closed, SJAE performance and condenser vacuum may be improved by switching elements.

3.2.2 Gradual Loss of Vacuum

Some of the causes for a gradual falling off in vacuum could be attributed to:

- Nozzle or diffuser eroded or corroded
- Improper operation of condensate trap
- Clogged loop seal drain pipe
- Leaking SJAE system condenser tube
- Wet steam

3.2.2.1 Nozzle or Diffuser Eroded or Corroded

If the unit is operated in the shut off condition and the pressure is greater than 0.25 in. HgA (0.85 kPa), it is possible that the nozzle or diffuser is eroded or corroded. It is recommended that the parts be inspected periodically and a record made of the wear found. If replacement of these parts occurs too frequently, the cause of failure must be determined. Usually, it is found to be wet steam.

3.2.2.2 Improper Operation of Condensate Trap

To correct this problem, the trap should be disassembled and cleaned, proper drainage also being ensured.

3.2.2.3 Clogged Loop Seal Drain Pipe Tube

To correct this problem, clean or replace the loop seal piping.

3.2.2.4 Leaking SJAE System Condenser Tube

Check for any leaks by applying a hydrostatic test on the vapor side of the inter- and aftercondensers. In order to locate the tube that is leaking, it will be necessary to remove the waterbox cover and close the inter- and aftercondenser drain valves. Replace or plug any damaged SJAE condenser tubes.

3.2.2.5 Wet Steam

A fluctuating steam pressure gage may indicate the presence of wet steam. The steam piping should be examined to ensure that there are no low points for condensate to accumulate and that the piping is properly insulated.

3.2.3 Poor Vacuum and/or High Outlet Water Temperature

Typically, the cooling water supply to the ejector system is the condensate from the main turbine condenser. At low turbine loads, the condensate flow may be insufficient to sustain proper cooling within the ejector system. If no alternative source of fresh water supply is available to replace the condensate flow, a loss of vacuum may result, along with high discharge temperatures on the outlet of the SJAE condensers.

3.3 Field Testing

It is difficult to check the operation of an ejector in the field, but some testing can be accomplished by checking the shut-off performance of each ejector. It is recommended that tests be performed when the unit is first placed in operation and that these readings be kept on file for future reference.

If an ejector is operating satisfactorily but suddenly loses vacuum and then reestablishes its performance immediately, the probable causes are among the following:

- Momentary drop in steam pressure
- Slugs of water in the motive steam
- Momentary increase in back pressure
- Momentary increase in air leakage
- Temporary increase in condensing water temperature
- Temporary decrease in condensing water flow

If an ejector operates satisfactorily over an extended period of time and then gradually loses vacuum, it may be an indication of internal wear. Ejectors should be inspected periodically and components replaced as needed.

3.4 Checking the Operation of a Two-Stage Vacuum System

The following procedure can be used to check the operation of a two-stage vacuum system:

1. Check the blanked off suction pressure in the first stage with both ejector stages operating. This pressure should be 0.25–0.30 in. HgA (0.85–1.0 kPa) or less. If this reading is obtained, then the problem lies elsewhere. If this reading is not obtained, then there is a problem with the ejector system. Note that the steam pressure should be maintained at no more than 15-20% above the rated ejector motive pressure. If this reading is erratic, refer to Section 3.2.

2. Shut off the steam supply to the first stage and check the shutoff reading for the atmospheric stage, which should be 2.5 in. HgA (8.5 kPa) or less. If this reading checks, then the problem resides in the first stage.

3. If the vacuum system cannot be taken off line, check the first stage and second stage inlet pressures and compare with Table 3-1. If the pressure is not within the specified range, the problem may be due to:

   - Condenser water flow
   - Steam pressure
   - Condenser drains
   - Cleanliness of SJAE condenser tubes

   Generally, the inlet pressures should correlate with each other as shown in Table 3-1.

Table 3-1
Expected Correlation Between First- and Second-Stage Inlet Pressures

First-Stage Inlet Pressure in. HgA (kPa)	Second-Stage Inlet Pressure in. HgA (kPa)
1.0 (3.4)	5.0 to 5.5 (17.0 to 18.6)
1.5 (5.1)	6.0 to 6.5 (20.3 to 22.0)
2.0 (6.8)	6.5 to 7.0 (22.0 to 23.7)
2.5 (8.5)	7.0 to 7.5 (23.7 to 25.4)
3.0 (10.2)	7.5 to 8.0 (25.4 to 27.1)
4.0 (13.6)	9.0 to 10.0 (30.5 to 33.9)

4. The air side pressure drop across the intercondenser should also be checked and compared with design.

3.5 Liquid Ring Vacuum Pump System Performance and Diagnostics

Assuming that the air-removal system was correctly designed for the specified conditions, many of the operational problems experienced with liquid ring vacuum pumps (LRVPs) are usually associated with fouling of the seal water cooler. This raises the seal water temperatures, which can result in reduced pump capacity and limit the ultimate vacuum that the pump can achieve. The increased seal water temperature may lead to cavitation damage for pump impellers.

The fundamental LRVP design criteria include:

- The absolute pressure to be maintained at the pump suction
- The total weight (lb/h or kg/h) or the volume flow (ACFM) of gas to be handled
- The temperature of the gas to be handled
- The composition of the gas to be handled, each constituent being given in lb/h (kg/h)

- The temperature and flow rate of the seal water and its quality
- Where the seal liquid is being recirculated, the design conditions for the heat exchanger, including the amount of heat to be removed

A typical LRVP performance curve is shown in Figure 3-4 in which both horsepower and air volume are plotted against pump inlet pressure for different pump speeds. Using such curves, it is possible to compare the performance of pumps made by different manufacturers and/or to different designs with confidence.

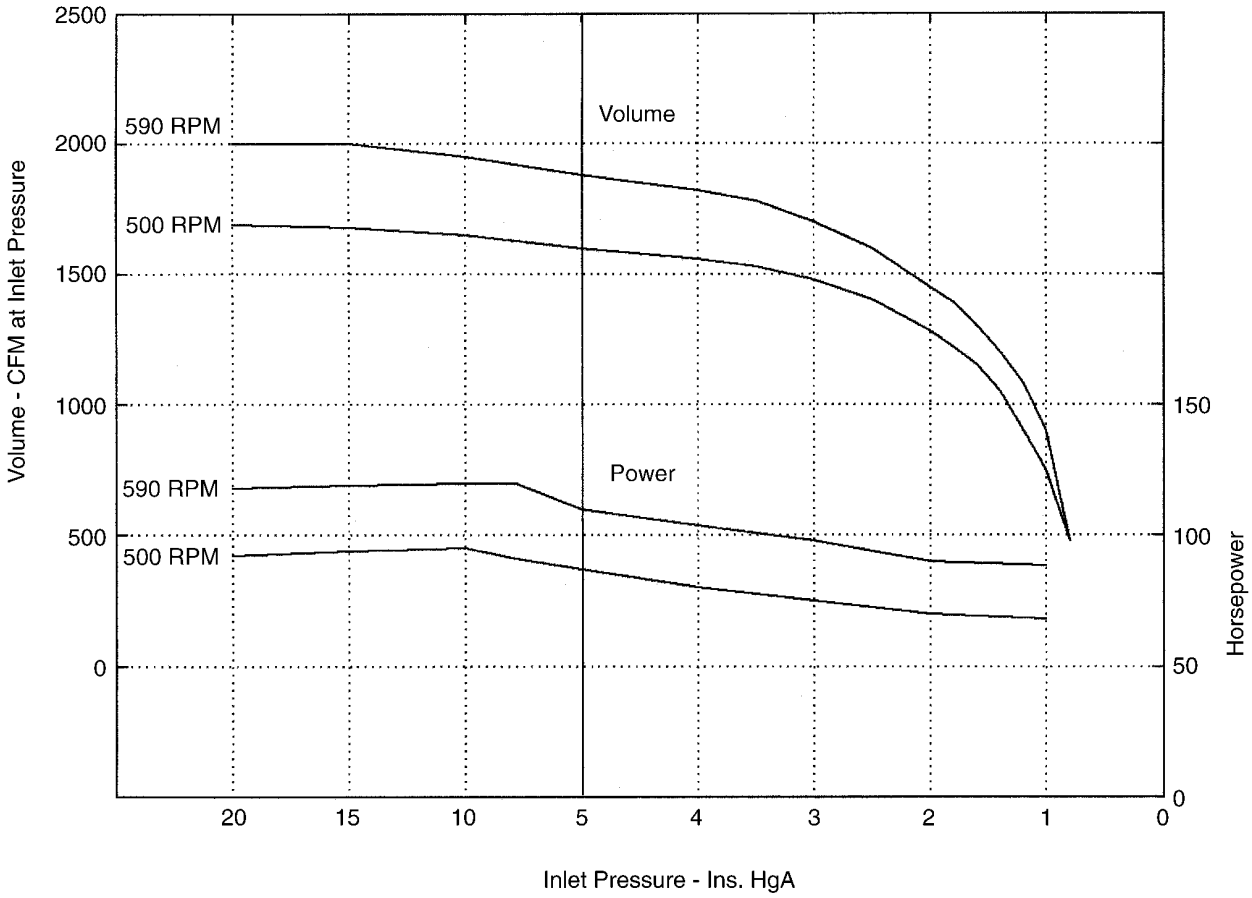

Figure 3-4
Typical Liquid Ring Vacuum Pump Performance Curve
(Courtesy of The Nash Engineering Company)

Three typical characteristic curves for LRVPs are shown in Figures 3-5, 3-6, and 3-7.

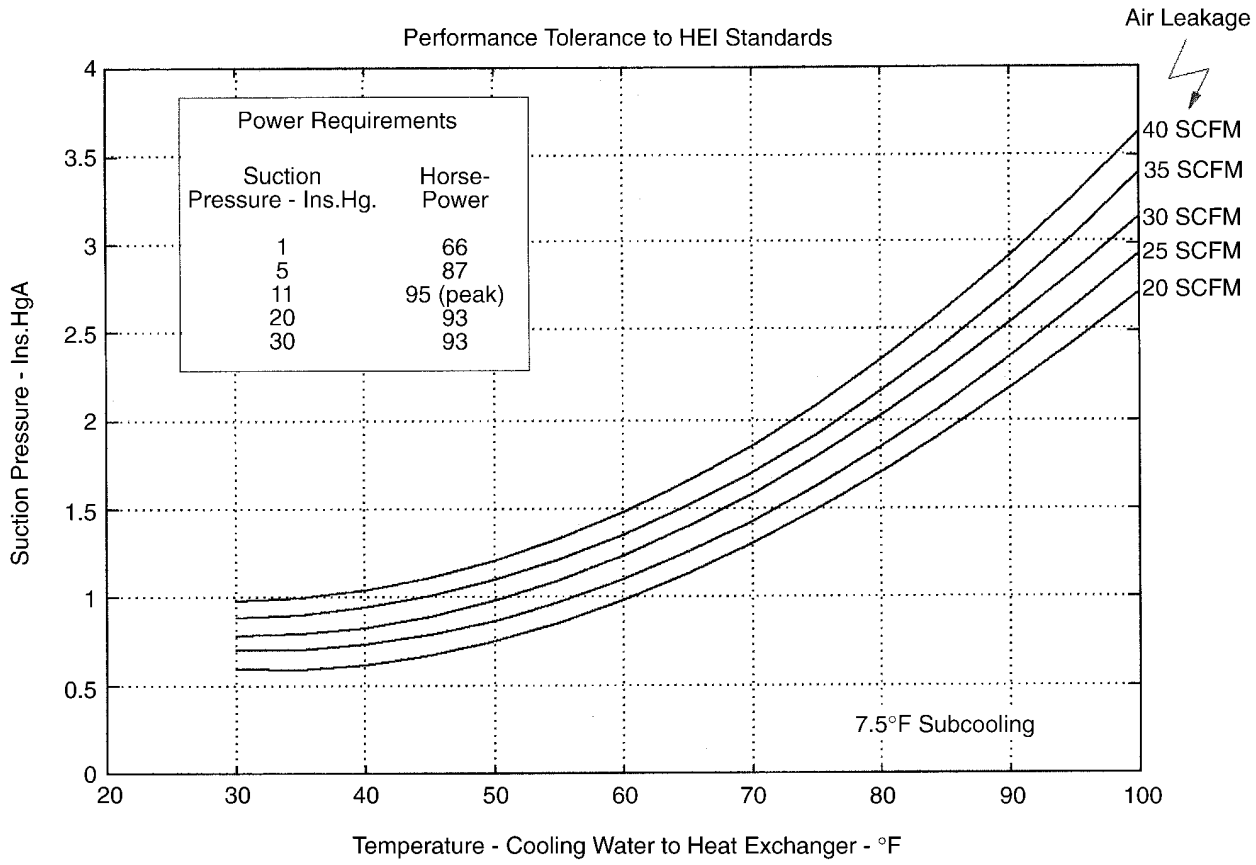

Figure 3-5
Plot of Suction Pressure vs. Water Temperature for Various Air Flows
(Courtesy of The Nash Engineering Company)

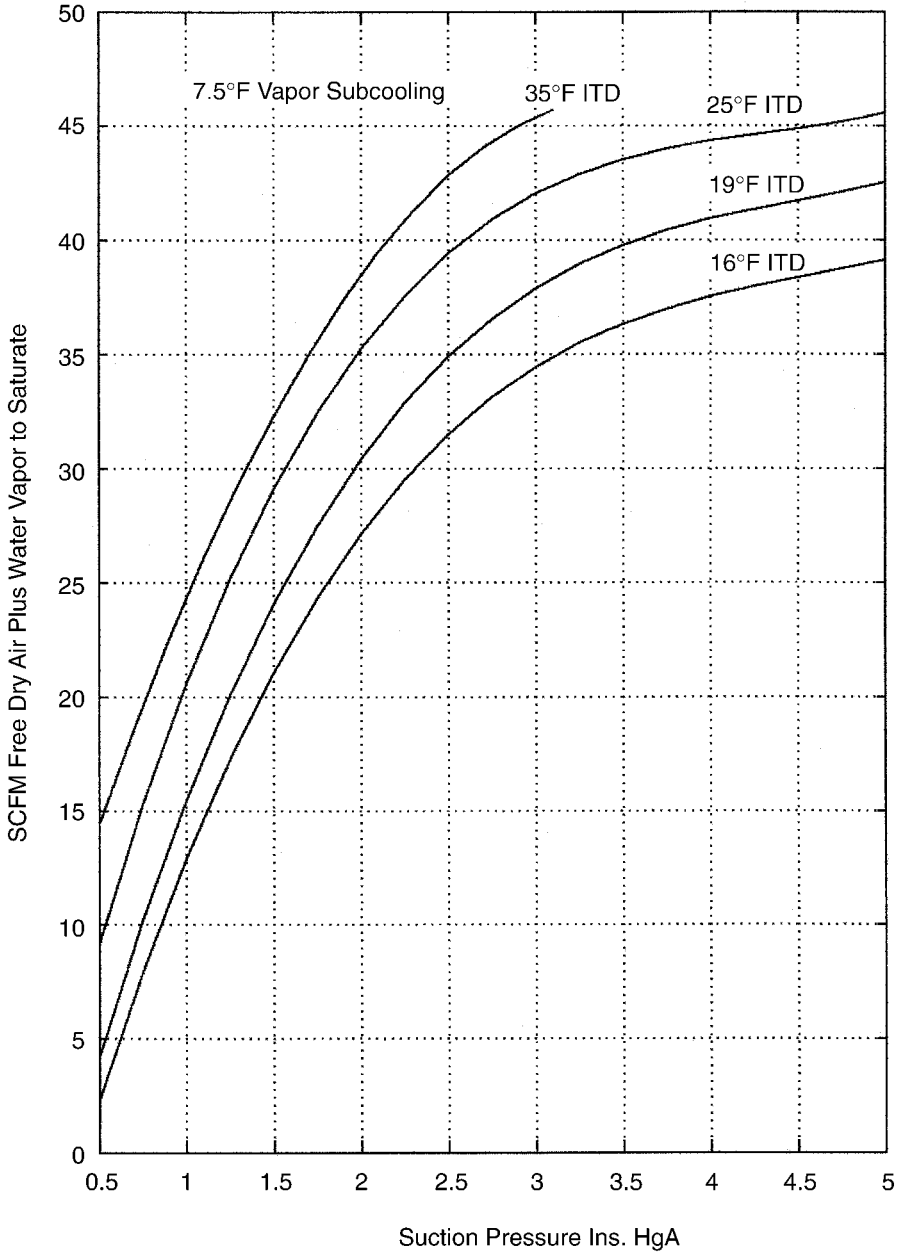

Figure 3-6
ITD-Based Plots
(Courtesy of The Nash Engineering Company)

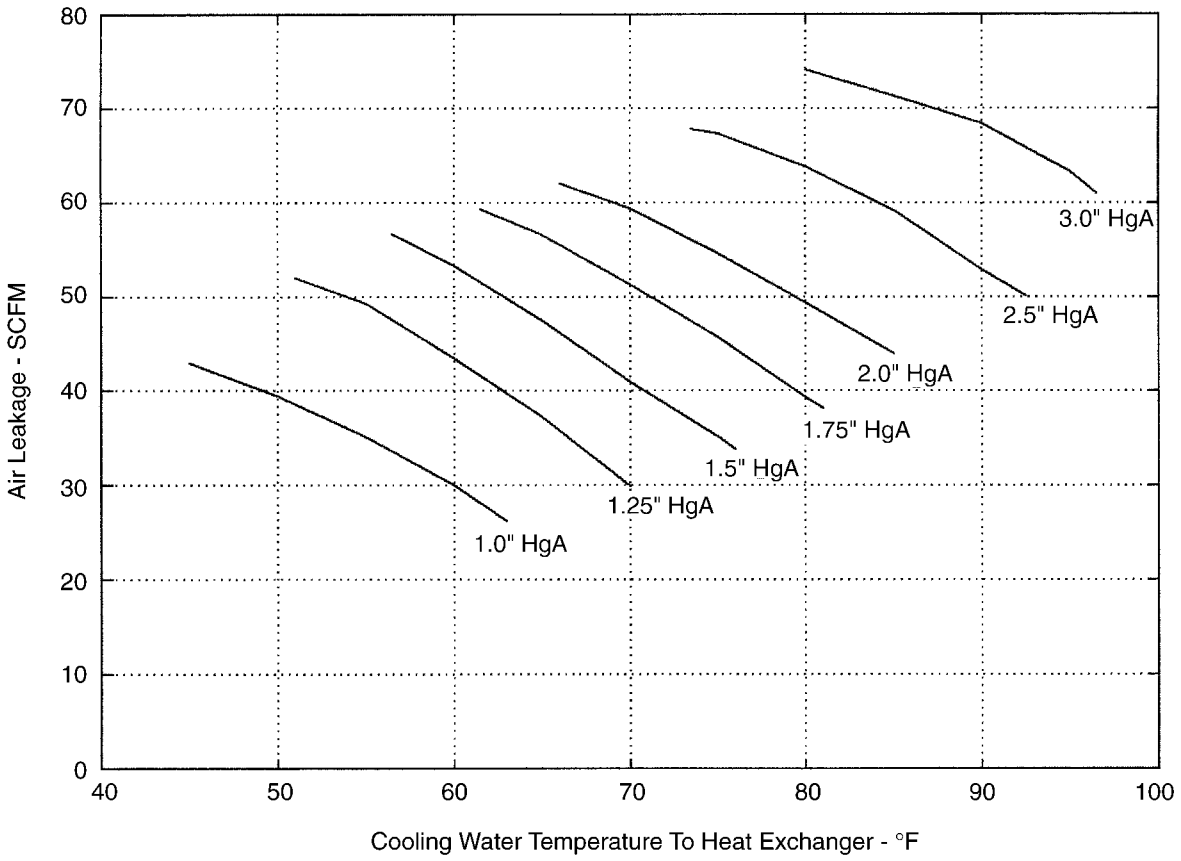

Figure 3-7
Suction Pressure-Based Plots
(Courtesy of Graham Manufacturing)

In Figure 3-5, the vacuum-producing capability of the pump is plotted vs. cooling water temperature for a variety of air leakages. This method of depicting pump performance allows a direct comparison with condenser performance over a wide range of cooling water temperatures. It should be noted that any such curve is for a specific vapor subcooling, usually 7.5°F (4.2°C).

Figure 3-6 plots the air-removal rate vs. suction pressure for a number of values of initial temperature difference (ITD), which is defined as the difference between saturation temperature at suction pressure and inlet cooling water temperature.

Figure 3-7 plots the air-removal rate vs. cooling water temperature for a number of values of suction pressure.

For best performance, the temperature of the seal water will be less than the saturation temperature of the gas at the inlet pressure. Under these conditions the LRVP will act as a direct contact condenser for the water vapor contained in the incoming air/water mixture, effectively reducing the volume of gas to be compressed.

Although it is considered to occur under essentially isothermal conditions, compression actually occurs with a typical temperature rise of 10 to 15°F (5 to 8°C). The seal water temperature rises

along the length of the compression path and, if cavitation is to be avoided, this temperature must always be less than the vapor temperature corresponding to the pressure at that point.

The Heat Exchange Institute *Performance Standard for LRVPs* [13] provides a Test Report Form and a test procedure for this equipment; the test setup is shown in Figure 3-8. For the test, ambient air is drawn in to the suction of the pump, which also receives a controlled amount of seal water. Pressures and temperatures throughout the system are measured together with the water and air flow rates. The performance under these measured conditions is then determined in accordance with the method defined by the standard. Such testing is useful when comparing performance to a standard LRVP dry air performance curve.

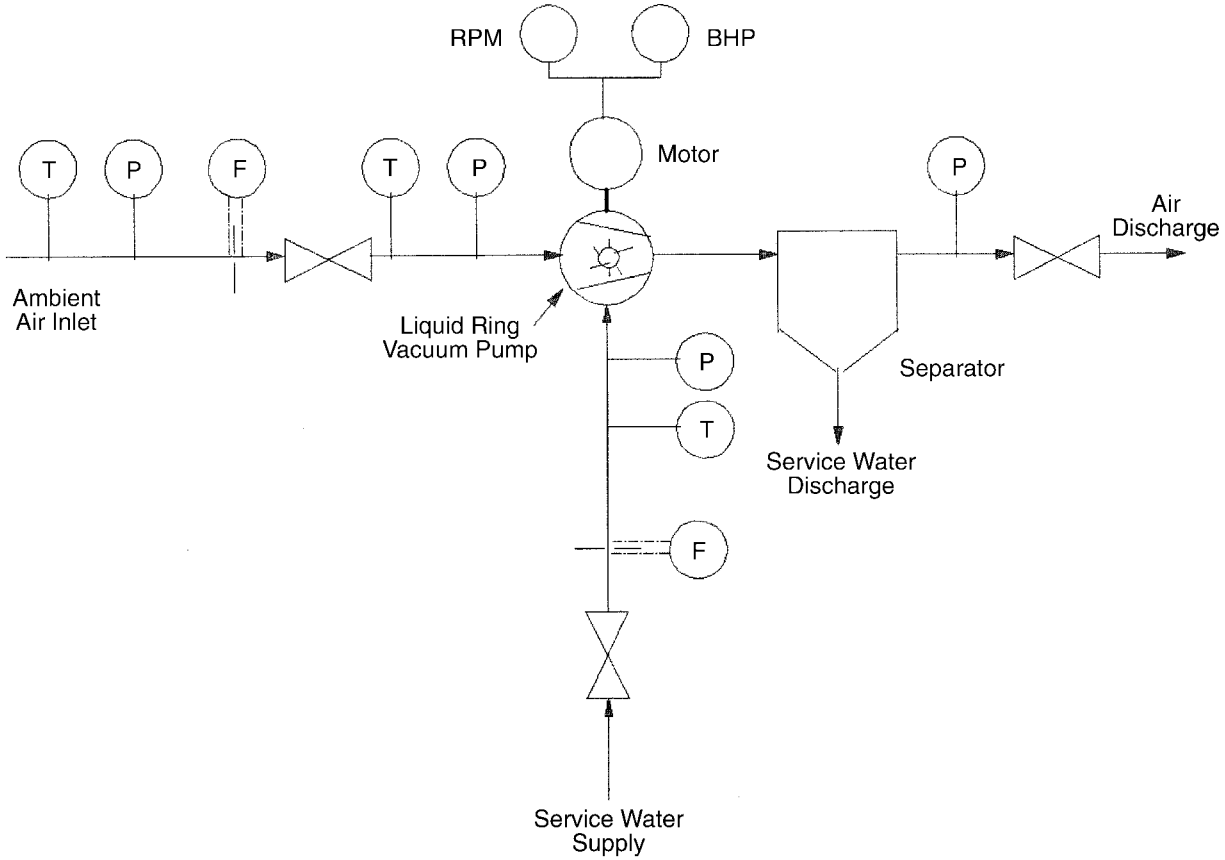

Figure 3-8
Test Schematic

However, the vapor drawn from the air-removal section of a condenser consists of both air and water vapor. The standard acknowledges that “pumps are sized by the manufacturer using proprietary conversion factors to compensate for deviation between field conditions and standard published performance.” The standard gives the design point for air in terms only of inlet volume flow rate, absorbed horsepower, and service water flow rate. The performance of a plant operated LRVP can be directly measured as shown by Harpster et al. [14]. The measured capacity compared favorably with manufacturer’s rated performance curve. Necessary correction factors for ambient pressure and seal water temperature of the LRVP were applied to the

measured data. With only a 4% difference between the two sets of data, a validation of the measurement method and of the performance curve generation technique was achieved.

Reference has been made to the manner in which the seal liquid compresses the inlet gas. The specific heat and vapor pressure of the seal liquid, both a function of liquid temperature, are especially significant in the proper operation of LRVPs used in condenser air-removal systems. The LRVPs do not themselves create the vacuum within the condenser shell but have the important role of removing air in-leakage, thereby maintaining the vacuum level produced by the condensed steam, or in the case of high air in-leakage, allowing the back pressure to rise to a level where the LRVP capacity has increased sufficiently to match the amount of air being removed.

When an LRVP operates at a pressure at or close to the vapor pressure of its seal liquid, the possibility of cavitation exists. The susceptibility of a LRVP to cavitation is a function of the design of the pump and the tip speed of the rotor. If cavitation does occur, there are generally two options for eliminating the problem. The first option is to raise the inlet pressure of the LRVP above the vapor pressure of the seal liquid. This is usually accomplished by introducing an additional air leak into the inlet of the LRVP. However, it should be noted that this option may increase the condenser pressure, the effects of which are described in Section 2. The second option is to reduce the temperature of the seal water to the pump. This can be accomplished in practice either by reducing the approach of the heat exchanger, through cleaning, or by increasing the flow of cooling water.

Skelton [15] also showed the severe damage which cavitation can cause to pump impellers as well as suction and discharge ports in either stage of a two-stage LRVP. The damage can be recognized as a series of craters or holes spread in a continuous pattern over an impeller blade. It is vaporization of the seal liquid that creates the conditions for cavitation, the damage occurring when a vapor bubble collapses, usually under an increase in pressure as the vapor travels through the pump. When the collapse occurs, a high velocity micro-jet of water tears away at the metallic surfaces of the pump internals. To avoid this, the seal water must be cold enough to avoid vaporization at the lowest anticipated pump suction pressure.

Under normal operation, the seal water temperature will rise by the heat of compression plus the heat due to condensation of the water vapor entering the pump. The purpose of the seal cooler is to remove this heat from the LRVP system and so maintain the temperature of the water entering the pump below the saturation temperature, corresponding to the pressure at the LRVP suction.

The lower the water temperature for a given pump suction pressure, the higher the air-removal rate. Likewise, any increase in condenser back pressure while the water temperature remains constant will be accompanied by an increase in the air-removal rate of the LRVP. If excessive air in-leakage, usually accompanied by an increased condenser pressure, results in underventing of the condenser, this can often be corrected by starting up an additional LRVP. However, if high seal water temperature is the cause of the high back pressure, pump cavitation may occur.

Alternatively, overventing may occur, caused when the LRVP tries to operate at a lower pressure than the condenser. This results in a larger condensable load being drawn into the pump with a normal, but very low, noncondensable load. The increased amount of latent heat will cause the seal water temperature to rise, producing a vapor pressure approaching that of the condenser and

possibly causing the pump to cavitate. To avoid this, the LRVP must operate as an adjunct to the condenser. The cooling water to the seal water heat exchanger must be provided at as cold a temperature as possible for high air loads. At low air loads when high capacity is not needed, the temperature will rise to slightly below the saturation temperature corresponding to the suction pressure.

Assuming that the LRVP has not been subjected to cavitation damage or excess wear, the seal water heat exchanger is the usual culprit in a problematic LRVP system. The exchanger may need to be cleaned to ensure that it retains its heat transfer capacity. A check of the cooling water flow rate and supply temperature, as well as the temperature rise of the seal water, should allow performance to be checked against design conditions. It is critical that the seal water cooler be cleaned at regular intervals and its performance should be as closely scrutinized as that of the main condenser.

Clearly, another operating factor to be considered is whether the seal water flow rate is sufficient and in accordance with design.

After eliminating seal water inlet temperature as a problem, it is possible that the noncondensable load is less than the capacity of the pump at the current seal water temperature. The LRVP is a fixed-volume machine that will satisfy its load requirement either from the condenser or from its own seal water. The suction pressure of the LRVP will vary as a function of its seal water temperature, and if the air load is less than required, the LRVP will attempt to operate in a lower suction pressure range. Cavitation can be prevented by adding an air load to the LRVP by means of a vacuum relief valve, for example. If such a valve is provided, its setting should be adjusted only after having first determined that the inlet and outlet seal water temperatures are correct. It should be noted, however, that such a device may limit the suction pressure that the pump is capable of attaining.

3.5.1 Troubleshooting Flowchart

The principal elements for troubleshooting potential problems with LRVPs are shown in Figure 3-9 below.

The first response to a poor condenser vacuum is to check whether a sufficient number of pumps are in operation. The air in-leakage is then checked and steps should be taken to reduce it if it is high. If modern instrumentation is available (see Section 2), air in-leak and pump capacity (in terms of either ACFM or mass flow rate) can be checked. If capacity is low, the pump will need attention, such as adjusting the operating conditions or performing maintenance. Assuming the above conditions have been met, the separator level should then be examined and, if low, makeup water should be added.

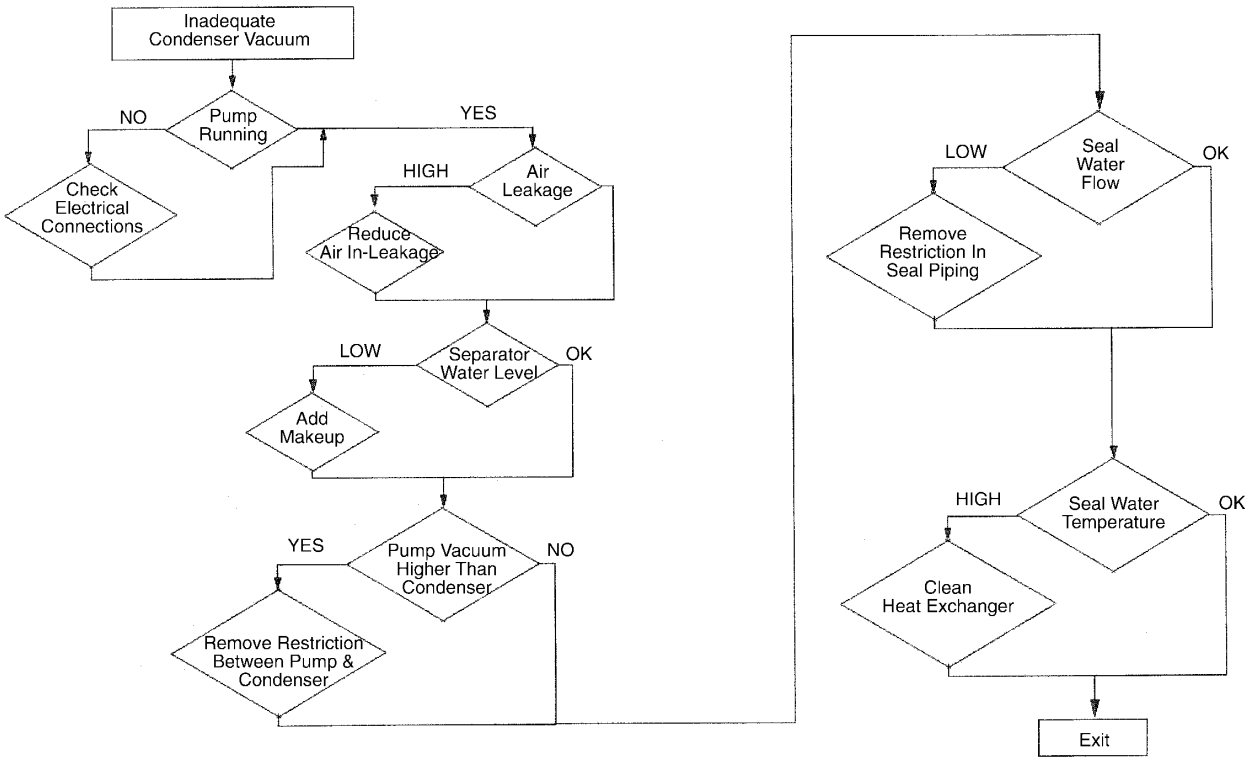

Figure 3-9
Principal Elements for Troubleshooting Potential Problems with LRVPs

Air leakage at the LRVP shaft packing gland should be checked. If a leak is suspected, a hose with a small stream of water may be sprayed on the rotating shaft to temporarily stop the leak. A measurement of the disappearance of the leak can be made using the LRVP exit rotameter or by measuring the mass flow rate or ACFM capacity on the suction side of one LRVP, as mentioned above.

If problems persist and the pump vacuum is higher than the vacuum in the condenser, there may be a restriction or closed valve between them and that should be corrected. Similarly, if the seal water flow is low, there is probably a restriction within the seal water piping, and the restriction should be located and removed.

Finally, if the seal water temperature is high, it probably indicates a problem with the heat exchanger, especially fouling.

3.6 References

1. R. I. Royds and E. Johnson, "The Fundamental Principles of the Steam Ejector," *Proceedings of Mech. E.*, Vol.145, pp. 193–209 (1941). Discussion, Vol. 146, pp. 223–235 (1942).

2. Gustav Flugel, "Berechnung von Strahlapparaten," *Zeitshrift des VDI*, Vol. 83, pp. 1065–1069 (1939).

3. Gustav Flugel, *The Design of Jet Pumps,* U.S. National Advisory Committee for Aeronautics, Tech. Memo 982, July 1941.

4. J. H. Keenan and E. P. Neumann, "A Simple Air Ejector," *Journal of Applied Mechanics, Trans. ASME,* Vol. 64, p. A-75 to A-84 (1942).

5. J. H. Keenan, E. P. Neumann, and F. Lustwerkm, "An Investigation of Ejector Design by Analysis and Experiment," *Journal of Applied Mechanics, Trans. ASME,* pp. 299–309 (September 1950).

6. H. G. Elrod, "The Theory of Ejectors," *Journal of Fluid Mechanics, Trans. ASME,* pp. A-170 to A-174 (September 1945).

7. *Code on Ejectors,* ASME Performance Test Codes, PTC 24-1948, ASME New York, NY. Republished in 1976.

8. *Standards for Steam Jet Vacuum Systems, Fourth Edition.* Heat Exchange Institute, Cleveland OH 1988. Reaffirmed in 1995.

9. W. C. Holton, "Effect of Molecular Weight of Entrained Fluid on the Performance of Steam-Jet Ejectors," *Trans. ASME,* pp. 905–910 (October 1951).

10. W. C. Holton and E. J. Schulz, "Effect of Temperature of Entrained Fluid on the Performance of Steam-Jet Ejectors," *Trans. ASME,* pp. 911–913 (October 1951).

11. *ASME Steam Tables*. ASME, New York, NY 1967.

12. *Two Stage Vacuum Systems Manual.* Schutte & Koerting, Bensalem, PA, May 1, 1996.

13. *Performance Standard for Liquid Ring Vacuum Pumps*. Heat Exchange Institute, Cleveland, OH 1987.

14. J. Harpster, D. Molnar, and D. Thompson, "Advancement In Air Inleak Measurements," *Proceedings of the PowerGen Americas Conference,* Orlando, FL, December 7–9, 1994.

15. Kevin Skelton, "Cavitation in Liquid Ring Vacuum Pumps Used in Condenser Venting Service," *Proceedings of the EPRI Condenser Technology Conference,* Charleston, SC, September 1–3, 1999.

4
IMPACT ON PLANT FEEDWATER CHEMISTRY OF CONDENSER WATER AND AIR INGRESS

The Rankine Cycle can be considered to have two major equipment trains:

- The **steam train**, which extends from the throttle valve on the turbogenerator through the various turbine expansion stages and terminates at the condenser
- The **water train**, which extends from the condenser through the feedwater heaters, through the boiler or steam generator, where it changes from the liquid to the vapor state, and finally terminates at the turbine throttle valve

The transition point between these trains is the condenser, in which the steam is converted from vapor to liquid. It is also the point at which:

- The thermal efficiency of the cycle is largely determined (as a function of back pressure).
- The concentration, within the condensate, of gases corrosive to the feedwater heaters and steam generator becomes critical.
- The condensate can become chemically contaminated by in-leakage of raw circulating system water.

Thus, the performance of the condenser is not only directly related to the ultimate thermodynamic performance of the unit, but it also strongly influences the chemistry of the feedwater recycled to the unit, as well as the associated long-term effects on corrosion and unit life expectancy.

Section 2 discussed some of the factors that affect the thermodynamic performance of the condenser, and Section 3 examined those that affect the performance of the air-removal equipment. This section focuses on the effects of the behavior of the condenser and its auxiliary equipment on feedwater chemistry, particularly the way that this affects the operation of the secondary plant on PWRs and BWRs. Much of this information has been abstracted from EPRI Report NP-3020 [1], now out of print, as well as from other sources as noted.

4.1 Air Ingress, Dissolved Oxygen, and Plant Operation

In a nuclear plant, the secondary plant is primarily designed to produce electricity and to do so with maximum thermodynamic efficiency. However, for the system designer, water chemistry is usually not the primary consideration, but in the long term, it can have a significant impact upon the reliability and availability of the plant and is important in the control of corrosion. The mode

of operation, such as power level, temperature, and pressure has a major effect on local water chemistry, just as the proper control of chemical additions does.

With the adoption of all volatile treatment chemistry (AVT), the goal is to operate the system in a manner that optimizes desirable chemical reactions, while minimizing the processes that lead to increased transport of iron and copper corrosion products. This means operating the plant within the efficiency limits established by thermodynamic considerations, while at the same time optimizing operation so that condensate and feedwater oxygen concentrations are as low as possible. This allows chemical scavenging reactions to be used to control corrosion processes.

Most plants were designed and are operated for high thermal efficiency, and most operators are familiar with operating techniques to encourage high vacuum operation in the main condenser as well as high temperatures out of the deaerating feed tank. However, operation for high thermal efficiency, while necessary, does not mean that dissolved oxygen is maintained at the lowest achievable level. Additional operator actions may be necessary.

This section examines the effects of operations on mechanical and chemical processes with a view to optimization for oxygen control.

4.1.1 Feedwater Treatment and Dissolved Oxygen Control

The use of volatile water chemistry in high-pressure boilers and nuclear power system steam generators has resulted in the use of hydrazine to control oxygen levels and ammonium hydroxide or morpholine to control the pH of the feedwater.

Hydrazine is intended to control trace amounts of oxygen and to supplement mechanical deaeration in the system, whether the mechanical deaeration is by condenser or a combination of condenser and deaerating feedwater heater. The condensate/feedwater cycle will decompose the hydrazine to ammonia (plus hydrogen and nitrogen) and increase the pH of the water. At some plants, this reaction may be supplemented with the addition of ammonium hydroxide or morpholine to maintain the desired pH level.

All volatile treatment (AVT) reduces the amount of sludge in the steam generators. Further, since the chemicals are carried over with the steam to the hotwell of the condenser, chemistry control of the entire system can be accomplished. One disadvantage is that there is little buffering capacity to the steam generators; because the ammonia is carried over with the steam, the concentration of OH^+ in the steam generators cannot be maintained. Another is that the chemicals become lost through the action of the air-removal system [2].

4.1.2 Hydrazine-Reaction/Decomposition/pH

Hydrazine is usually added to the system downstream of the condensate polishers by means of chemical addition pumps and, at temperatures ranging between 150 and 400°F (66 and 204°C), will remove dissolved oxygen. Note that hydrazine does not react significantly with oxygen at temperatures below 150°F (66°C) and decomposes rapidly at temperatures above 400°F (204°C). Two basic reactions must be considered:

- The hydrazine reacts with oxygen and some oxides.
- The hydrazine decomposes.

4.1.2.1 Oxygen Scavenging and Oxide Conversion

The basic reaction that describes the net result of oxygen reduction in feedwater treated with hydrazine is:

$$N_2H_4 + 0_2 \text{ ---- } > N_2 + 2H_20 \qquad \textbf{Eq. 4-1}$$

This reaction may be indirect as follows:

$$6Fe_20_3 + N_2H_4 \text{ ---- } > 4Fe_30_4 + N_2 + 2H_20 \qquad \textbf{Eq. 4-2}$$

$$4Fe_30_4 + 0_2 \text{ ---- } > 6Fe_20_3 \qquad \textbf{Eq. 4-3}$$

and/or

$$4CuO + N_2H_4 \text{ ---- } > N_2 + 2H_20 + 2Cu_20 \qquad \textbf{Eq. 4-4}$$

$$2Cu_20 + 0_2 \text{ ---- } > 4CuO \qquad \textbf{Eq. 4-5}$$

Equation 4-2 indicates that hydrazine reduces red iron oxide to magnetite, which protects metal surfaces from further corrosion. However, the presence of too much hydrazine can dissolve this layer. The importance of Equations 4-2 and 4-4 will be discussed later in the information concerning plant material mix. For now, the formation of ferric and cupric oxide must be considered as a mechanism for the consumption of hydrazine.

There are other controllable operating variables that affect the oxygen scavenging rate, the most important of which are time, condensate/feedwater temperature, and pH.

4.1.2.2 Hydrazine Decomposition

Hydrazine will decompose within the stated temperature range in accordance with either

$$3N_2H_4 \text{ -----} > N_2 + 4NH_3 \qquad \textbf{Eq. 4-6}$$

or

$$2N_2H_4 \text{ ---- } > N_2 + H_2 + 2NH_3 \qquad \textbf{Eq. 4-7}$$

It is seen that hydrazine decomposes into gases of both low solubility (nitrogen and hydrogen), and high solubility (ammonia) that will initially alter the pH of the feedwater and then vaporize with the steam in the steam generator.

The decomposition rate is temperature/time dependent; the decomposition rate below 400°F (204°C) is negligible but increases very rapidly above 400°F (204°C). Further, the decomposition time for half the hydrazine ranges from 41 seconds at 392°F (200°C) to 15 seconds at 540°F (282°C).

4.1.2.3 Hydrazine-pH

As hydrazine decomposes, one of the products formed is ammonia. This increases the pH level of the feedwater, with most of the decomposition occurring after the final feedwater heater, that is, after the feedwater temperature reaches 400°F (204°C). However, as the ammonia is vaporized with the steam, equilibrium conditions are reached very rapidly. In a PWR plant with recirculating steam generators, the pH is slightly higher in the final feedwater heater than in the steam generator.

It should be noted that, at temperatures below the decomposition temperature (down to room temperature), a hydrazine solution is slightly alkaline. Another important characteristic of hydrazine at the concentrations used in PWR feedwater systems is that there is some (unidentified) passivation that inhibits corrosion when operating at temperatures below that at which oxygen scavenging occurs. With supplemental pH control, through the provision of sufficient ammonium hydroxide to raise the pH to the 8.5 to 9.2 range, this passivation will provide adequate corrosion control in the low-temperature range.

4.1.2.4 The Safe Use of Hydrazine

Hydrazine is a potential carcinogen. It also reacts with water in the lungs, attacking them and depriving the lungs of oxygen. Individuals can become allergic to contact with the chemical on the skin. Hydrazine is a strong reducing agent and can react violently with oxidizers, strong acids, and some metal salts. It will also attack leather. Thus, care must be exercised when handling hydrazine.

4.1.2.5 Condensate Polishers

Some plants use full-flow deep bed condensate polishers, and the effects on the resins must be considered when controlling oxygen with hydrazine. Demineralizer beds remove hydrazine from the condensate in such a way that the oxygen scavenging rate may be increased; however, this possible increase is not significant from an operating standpoint. Of significance is the increased rate of exhaustion of the ion exchange resin. For this reason, hydrazine is added downstream of the resin beds.

Under long-term steady-state conditions, however, hydrazine may be found in the condenser hotwell. This hydrazine is transported as a vapor with the steam and is, subsequently, condensed in the condenser. The hydrazine carried over is in trace amounts and is not expected to adversely affect the resin beds.

In some plants, hydrazine may even be injected into turbine crossovers or into the low-pressure turbine hood.

4.1.2.6 pH Control

In 1982, ammonium hydroxide was the pH control chemical most commonly used in PWR secondary plants in the United States. Some plants have used morpholine in the hope of providing better corrosion protection in the steam side because morpholine has a steam/water distribution ratio close to unity.

The pH controlling chemicals are usually injected into the condensate between the condensate pump discharge and the first-stage feedwater heater or, if the plant is equipped with full-flow condensate polishers (FFCP) between the condensate polishers and first heater. Unfortunately, high concentrations of ammonia can result in the corrosion of copper alloy heater and condenser tubes, causing copper compounds to be transported into the steam generator. In order to minimize the corrosion of copper, pH specifications are set somewhat lower for plants with copper tubed equipment than for plants containing only non-copper alloys in the secondary plant.

Ammonia is highly soluble in water; therefore, most of the ammonia passing with the exhaust steam into the condenser goes back into solution in the condensate, rather than being removed with the noncondensable off-gas flow.

For cold wet layup conditions, pH control chemicals may have to be added to the steam generators at a higher concentration than is acceptable for any copper alloy tubes used in the feedwater system. For this reason, the water in the steam generators should be treated separately from the rest of the plant in preparation for and during cold wet layup. This requires a separate steam generator wet layup chemical addition, recirculation, and sampling system. A system to accomplish that was described in the final report to EPRI Program S-164-1 [1]. Returning to power from cold shutdown with wet layup requires special attention to remove the high levels of corrosion product release and to deaerate feedwater that may be aerated during the shutdown period.

4.1.2.7 Other Chemicals Used for pH Control

pH control through ammonia is reduced in those parts of the system that contain a two-phase flow (steam and water). Because the NH_3 will migrate to the steam phase, the water droplets in the steam will exist at a relatively low pH. These acidic water droplets can cause significant damage to piping through erosion/corrosion. Two-phase flow exists in the portions of the steam extraction lines, the MSR system, and the heaters and heater drain systems [2].

For this reason, additional amine chemicals are added to the system. Examples of chemicals that have been used in the past are morpholine and ethanolamine (ETA). The latest chemical in use is methoxypropylamine.

4.1.2.8 Methoxypropylamine

Methoxypropylamine (MPA) is the latest chemical in use for pH control. It is an amine (an organic) used in conjunction with all volatile treatment to mitigate erosion/corrosion in wet-

steam piping. Erosion/corrosion is an accelerated form of corrosion resulting from an unstable surface oxide film that is normally expected to be protective.

These wet-steam areas where condensation first takes place are better pH-protected because methoxypropylamine is not as volatile as ammonia.

The use of MPA includes the added benefit of reduced sludge accumulation in the steam generators due to decreased iron transport. Also, polisher run times have improved due to less clogging of tube bundles. MPA is added to the condensate system downstream of the polishers, the feedwater rate being based on the pH at the moisture separator reheater. It has had no adverse effect on the operation of the polishers, but it will impact the sodium removal capacity of the steam generator blowdown demineralizers.

Disadvantages include a slightly elevated cation conductivity and earlier polisher exhaustion due to the presence of acidic organic substances.

Methoxypropylamine is a liquid with an ammonia odor and is somewhat irritating to the skin, especially in concentrated solutions (> 1%). Vapors can cause eye and upper respiratory irritation. In concentrated solutions (for example, in the chemical addition system), it can attack rubber and leaches conventional pipe dope.

4.1.2.9 Dimethylamine

Dimethylamine is added to the secondary system as an antifouling/defouling agent, usually downstream of the condensate polishers.

Dimethylamine is incompatible with strong acids and oxidizers and should be stored in a flammable storage area. Safety precautions are similar to those for hydrazine. Always refer to the chemical label or MSDS/fact sheet for specific precautions.

4.1.2.10 Carbohydrazide

Carbohydrazide is added to the secondary system to scavenge oxygen and can be used instead of hydrazine during wet layup of the system. It is added to the steam generators (SGs) via the SG wet layup chemical addition system. It is also added to the condenser prior to breaking vacuum.

Like hydrazine, carbohydrazide is a reducing agent, so it can react violently with oxidizers, strong acids, and some metal salts. It is not as toxic as hydrazine. Safety precautions are similar to those for MPA. Always refer to the chemical label or MSDS/fact sheet for specific precautions.

4.1.3 Materials of Construction

The material mix of the components influences the point of injection of the hydrazine and the desired pH level of the condensate.

4.1.3.1 Copper Tubed Heat Exchange Equipment

Many existing plants have both main condensers and heat exchangers tubed with copper-bearing alloys. These tubes can be copper-zinc or copper-nickel alloys and plants so equipped have specific characteristics that affect water treatment.

Copper-alloy-tubed heat exchangers are efficient reducers of trace amounts of oxygen in the feedwater. Tests at Indian Point 2 indicated that the dissolved oxygen in the feedwater between the high-pressure feedwater heater and the steam generator was independent of the concentration of hydrazine injected downstream of the condensate pumps. The dissolved oxygen levels did not change when the hydrazine addition was stopped [3].

The addition of hydrazine to the condensate/feed train in plants equipped with copper-alloy tubes serves a somewhat different function. The reaction of copper with oxygen forms cupric oxide. The hydrazine reacts with cupric oxide to form cuprous oxide, which is relatively less aggressive (see Equation 4-4). Thus, hydrazine functions to scavenge the dissolved oxygen present and reduces the oxidation state of the cupric oxide initially formed. The residual hydrazine in the feedwater entering the steam generator can then react with the cuprous oxide and with any noncombined oxygen dissolved in the feedwater.

The important characteristic of copper-alloy systems is that the oxygen content measured between the high-pressure feedwater heater and the steam generator is *not* an indicator of the effectiveness of the hydrazine treatment.

The Indian Point 2 data indicated that the dissolved oxygen levels varied, depending on the stages of feedwater heating and, to a limited extent, with differences in hydrazine concentration. As expected, the reaction rate between copper and oxygen is temperature-sensitive and increases with temperature. To find an appropriate control point, it is necessary to find a more sensitive sample point. Typically, this should be between the discharge side of the condensate pump and the inlet of the first feedwater heater.

Another important aspect of copper-alloy plants is the sensitivity to high pH, particularly when pH is controlled by ammonium hydroxide. Copper-zinc alloys are susceptible to damage when exposed to ammonium hydroxide in a concentrated form, and damage has occurred in condensers fabricated from this alloy, particularly in the air-cooler sections. Limiting the pH values to 9.2 is effective in controlling this problem in the major portion of the tube bundle; however, in condensers with baffles shielding the air cooling zone from condensate flow, damage can still occur in zones of ammonia concentration.

4.1.3.2 Stainless Tube Heat Exchangers with Titanium Tubed Condensers

Condensate/feedwater trains equipped with stainless steel tubes in plants with either stainless steel or titanium tubed condensers have an effect on dissolved oxygen content that is directly opposite to that of copper-alloy tubed plants, that is, very little of the dissolved oxygen in the feedwater will react with the metal after the metal surfaces have been conditioned with oxide films. Thus, in plants with stainless steel/titanium components, the oxygen scavenging rates are directly dependent upon time, temperature, pH, and “excess” hydrazine level.

The sampling point at the outlet of the final heater is representative of the effectiveness of the hydrazine treatment if the water sample is chilled quickly after it is removed. The use of long sample lines prior to the chiller should be avoided because they may greatly increase the available reaction time for the scavenging reaction.

4.1.3.3 Mixed Material Plants

Plants referred to above are the two extremes in considering the oxygen removal that may be expected as a result of a reaction with plant construction materials. Other plants will fall between these extremes, and operator judgement will be required to determine which locations for water sampling are indicative of good water treatment.

Plants with feedwater heaters using carbon steel tubes will oxidize some of the oxygen by surface corrosion but normally not to the same extent as those plants with copper tubed heaters. In plants where both copper tubed heaters and carbon steel heaters are used, the oxidation rate is difficult to predict and testing is suggested. For conservative operation, dissolved oxygen in condensate should be used to indicate the total available oxygen content of the feedwater stream.

Following any maintenance operation during which condensers or feedwater heaters are retubed with a different material, the chemical injection and water chemistry sampling locations should be reviewed to reestablish good control points and chemical feed flows. Additional temporary sampling points may be necessary to establish an optimum chemistry.

4.1.4 Drains: Recycled Chemistry

In PWR plants with once-through steam generators, high-pressure drains are usually cascaded back to the deaerating heater or to the condensers. However, in most plants, low-pressure heater drains cascade back to the condenser, but MSR drains and some high-pressure heater drains may be pumped forward with the feedwater. Although the latter conserves the energy remaining in those drains, it also means that suspended and dissolved contaminants, such as copper and iron oxides, will be pumped into the steam generators.

EPRI Task S113-1 reports (NP-2656, NP-2977) [1] indicated that over half of the corrosion products transported to the steam generators were found in the forward pumped drains [1]. Because many plants have the option of returning high-pressure drains to the condenser, this practice should be followed when corrosion product transport in the drains exceeds a selected set point as determined by chemistry samples. This practice may result in a slight loss of thermodynamic efficiency because the thermal energy in the affected drains (300 to 350 BTU/lb or 698 to 814 kJ/kg) will be rejected to the condenser cooling water. The potential benefit, on the other hand, is a 50% reduction in the quantity of metal oxides and other corrosion products delivered to the steam generators. The drains will be cooled in the condenser and, for those plants equipped with condensate polishers, the corrosion products can be removed there.

4.1.5 Blowdown

Blowdown is the controlled release of steam generator bulk fluid through a system designed to cool, clean, and usually return the effluent to the system. In this way, the buildup or concentration of suspended solids including metal oxides and elemental metals in the steam generator bulk fluid can be controlled if the hydraulic configuration of the steam generator is suitable. Frequently, a vented flash tank is used to cool the blowdown flow, and this device will permit some deaeration of the water if blowdown water is recirculated during plant heatup.

With recirculation-type steam generators, contaminants transported into the steam generators will concentrate and can be removed by blowdown, but a relatively small portion can be carried over to the turbines in the steam. This is of particular concern if high-pressure drains containing relatively high concentrations of corrosion products and other impurities are pumped forward. The quantity of blowdown should be controlled by the impurity content of the steam generator bulk fluid. Here again, system thermal efficiency will be compromised slightly if high blowdown flow rates are used to control a high concentration of corrosion products or other impurities present in the system.

The loss in thermal efficiency will be controlled, to a large extent, by the heat recovery capability of the blowdown regenerative heat exchange system.

4.1.6 Startup Conditions

Startup procedures should be developed to remove as much oxygen as possible at low temperatures.

Worst case assumptions following a shutdown condition would be to assume oxygen-saturated water in the condensate/feed system. In this instance, the water should be recirculated from as far forward in the system as possible, but short of the steam generators, and then recirculated back to the suction side of the condensate pump. The water should be heated to about 200°F (93°C) but not more than 250°F (121°C) using pump heat and, if possible, some auxiliary steam to one of the feedwater heaters. Where condensate pumps are part of the recirculation circuit, high temperatures may not be possible because this will increase the required net positive suction head beyond what is available. In such instances, the temperature will have to remain low. The time period for oxygen reaction with chemical scavengers will be accordingly longer.

Hydrazine may be added in relatively large amounts for scavenging purposes. High consumption rates for hydrazine should be expected. In most instances, in plants without deaerating feedwater heaters, the main condensers will be “floating” on the system and act as a water expansion tank. If this is the case, it will be necessary to establish a vacuum in the condenser to preclude oxygen absorption in the condenser. Because the condensate polishers will be clogged by the high particulate release rate encountered at startup, the polishers should be bypassed during the initial stages of oxygen scavenging.

The intent of this process is to add hydrazine, raise the temperature of the condensate/feedwater to above 200°F (93°C), and deoxidize the water. This should create conditions where the deoxidation rate will occur at a reasonable rate but limit the decomposition of hydrazine. High

flow rates are not necessary because the oxygen scavenging reaction is time-dependent at these temperatures.

Control of the process can be carried out by measuring the difference between the hydrazine and oxygen concentrations in the outgoing and return legs. When the dissolved oxygen concentrations are within the desired range and condensate temperature is reduced to less than 130°F (54°C), the condensate polishers can be placed in service. The flow rate should be maximized to ensure proper cleanup of the condensate (particulate matter plus solubles) before the water is admitted to the steam generators.

There are other variations of recirculation flowpath that can be used to reduce the concentration of dissolved oxygen. On plants equipped with deaerating feedwater heaters, the feedwater can be recirculated through the deaerator. The condenser (under vacuum) also acts as a deaerator. Full advantage of these mechanical techniques can be used to speed the process. However, hydrazine treatment will still be necessary.

Another technique to reduce oxygen levels during (or prior to) initial startup is to dump the system contents, pull a vacuum, and refill with deoxygenated water, but this technique is equipment limited. In plants with steam jet air ejectors, the air ejector condenser is usually cooled with pumped condensate so that the vacuum on the system will be limited to that achievable with the hogging ejector. In plants with motor-driven vacuum pumps, a higher vacuum can be achieved. In both instances, the fill water should be as cool as possible to better assist the vacuum equipment to maintain the vacuum during the refill. But, in all circumstances, the vacuum in the system will be lower than the vaporization pressure of the added water.

As the fill occurs and if vacuum is maintained, the air remaining in the system diminishes. If the water temperature is close to the steam saturation temperature corresponding to the absolute pressure, the water will vaporize so that the vacuum equipment must pump out not only the compressing air but also the water vapor. Cool water is, thus, important to ensure that any air remaining is pumped out of the system.

Vacuum fill does not preclude the need for additional deoxidation after the system is filled. Recirculation with hydrazine is still required to reach the desired dissolved oxygen limits.

4.1.7 Significance of Hydrazine and Dissolved Oxygen Indications at Various Locations in the System

Water chemistry analyses performed on samples taken at various locations in the condensate/feedwater system can provide indications of the ongoing chemical reactions and the operating water chemistry environment. These data provide information that can be used for control and monitoring purposes. In order to properly evaluate these data, it is necessary to have some understanding of what the differences mean between sampling locations and what may happen, or is expected to happen, downstream from a given sampling point.

An example, previously discussed, is the dissolved oxygen concentration measured downstream from the final heater in a copper-alloy-tubed feedwater heater train**.** Low concentrations of oxygen do not necessarily indicate that the hydrazine is scavenging the dissolved oxygen

because the oxygen is also being removed by the copper. The same is true of differences in hydrazine concentrations, and the hydrazine may be reacting with cupric oxide.

These types of reaction are also true in feedwater trains tubed with carbon steel but to a much lesser extent. Dissolved oxygen will oxidize the tube surfaces to form ferric oxide and, to some extent, remove oxygen from the feedwater. Hydrazine will react with the ferric oxide and the dissolved oxygen. Thus, differential readings of hydrazine concentration are not necessarily an indication of only hydrazine scavenging efficiency in all ferrous secondary systems.

Hydrazine and oxygen concentrations measured at the end of long sample times, with the take off point between the final feedwater heater and the steam generator, may not be representative of the chemistry of the feedwater entering the steam generator because the hydrazine will continue to scavenge the oxygen and decompose to form ammonia in the sample lines. Thus, the oxygen concentrations indicated may not correspond to the concentration entering the steam generator but may depend on the relative transit times and temperature state of the sampling system.

4.1.7.1 Condensers

Oxygen in the condensers may be present in the incoming steam, from aerated drains, and from air in-leakage in the subatmospheric zones.

In copper-alloy-tubed condensers, copper compounds can form and be pumped into the system. The copper loss in the condenser is not significant, but the copper ions added to the condensate/feedwater can cause problems in other areas of the system.

Both titanium and stainless steel are relatively inert, and tubes manufactured from these materials do not contribute significantly to the chemistry of the system.

The carbon steel condenser shell will contribute ferric oxide to the system, but the contribution is usually very small during power operation. However, during initial startup following a plant shutdown, reaction with ferric oxide will result in higher than normal hydrazine consumption. Relatively large quantities of scale and oxides will also be released during the startup period.

4.1.7.2 Vapor Phase Reaction

Consideration was given to the possibility of a vapor phase reaction, that is, the ability of vapor phase hydrazine to react with gaseous oxygen in the steam. From a practical standpoint, neither time, temperature, method of spray, nor steam vapor environment favor such a reaction. The steam velocities (100 feet/s [30.5 m/s] to sonic) are such that the reaction time available is measured in tenths of a second. The temperatures (in the range of 530°F or 277°C) indicate rapid decomposition to ammonia and nitrogen, particularly in the fine spray condition. While there may be other reasons to spray hydrazine into the steam, oxygen scavenging in the steam is not considered practical. A study of hydrazine injection into the steam at the turbine crossover has concluded that no demonstrable improvement was obtained when compared with injection into the condenser pump discharge [4].

4.2 Effects of Water Ingress in PWRs

The industry has found that a tight condenser is essential to satisfactory steam generator and feedwater heater chemistry. Cooling water in-leakage through the main condenser, which is under a vacuum, is a major concern. This cooling water may be raw lake water, sea water, or even chemically treated cooling tower water.

Water in-leakage allows contaminants to enter the condensate and cause corrosion not only in many parts of the feedwater and steam generator systems but also in the turbine itself. General corrosion, pitting, stress corrosion, corrosion fatigue and their combinations are the major corrosion mechanisms resulting from the concentration of corrosive substances in the turbine. While general corrosion causes little problem, failure of turbine parts resulting from pitting, stress corrosion, and corrosion fatigue often result in catastrophic failures and long costly outages. They have been characterized as "low frequency, high impact" failures.

Corrosive substances identified as causing problems include:

- Sodium chloride
- Sodium hydroxide
- Sodium chloride with sodium sulfate
- Hydrogen sulfide
- Hypochloric acid
- Sulfuric acid

Chemistry indications of condenser in-leakage include the following:

- Rapid increases in cation conductivity, concentrations of chlorides, sodium, and/or silica.
- pH may drop due to dilution or the reaction with an acid found in the water.
- With cooling towers, in-leakage is much more severe due to the chemicals added and the tendency for them to become concentrated.

Contaminants may enter the secondary system through leaks in the condenser itself, which may develop in the joints between tube and tube sheet or through-wall penetrations. Contaminants may also enter from the condensate polishers; this tends to imitate a condenser tube leak. Resin or resin fines may also leak through the tubes and enter the system. Unfortunately, when this resin reaches the high temperatures of the steam generators, they will break down. In addition, exhausted resin could cause contaminants to be sloughed back into the system. Indicators include higher sodium and cation conductivity.

Additional sources of contaminants may result from the intrusion of resin, lubricating oils, or other undesirable chemicals, which may result in chemical analyses exceeding specifications and cause the following:

- Stress cracking corrosion (Cl^-)
- Localized corrosion (pH, Na)
- Fouling of resin
- Forced shutdown of plant

Because of these other sources of contamination, it is important to know the analysis of the water that is used for cooling, whether it is raw water or water drawn from a cooling tower loop.

Maintaining proper chemistry control of the secondary system is important in order to:

- Minimize corrosion of the entire system—iron in particular
- Minimize pipe thinning
- Prevent rupture of steam generator tubes and the subsequent release of radioactivity to the environment.
- Prevent scale formation—to maximize heat transfer capability
- Minimize carryover of contaminants to the turbine

To achieve these goals requires that a great deal of time, effort, and capital be invested in a water treatment program for the unit and system.

Of additional practical concern to plants is that proper control of feedwater chemistry helps to avoid violating manufacturer's warranty on components or equipment. Insurance rates are also often based upon the consistent maintenance of proper chemistry control.

4.2.1 Impurities of Special Concern

The following impurities occurring from water ingress pose specific corrosion problems in the steam generators or to the turbines.

4.2.1.1 Silica

Silica may form sand or glasslike material, which can coat heat exchange surfaces (main condenser, feedwater heaters, steam generator tubes) and turbine blades. Silica is a bigger problem for the once-through steam generators than it is for the recirculating steam generators (RSGs). EPRI Guidelines [5] even list silica as a diagnostic parameter for RSGs.

Silica is highly soluble in steam and is difficult to remove by filtration or ion exchange because it is a weak acid. Sources of silica include condenser leaks and poor quality makeup water.

Corrective action is by maintaining polishers and blowing down demineralizers. The makeup water source can also be controlled; the makeup water spec is 10 ppb of contaminants.

4.2.1.2 Sodium

Sodium should be kept as low as possible because it can contribute to caustic cracking in the steam generator when concentrated and boiled within crevices.

$$Na+OH \rightarrow NaOH \rightarrow Na^{+}+OH^{-}$$

Dry Wet

Sources of sodium include condenser leaks, polisher resin throw, makeup water, and concentration effect in the moisture separator reheaters (MSRs), where the drains are pumped forward into the feedwater.

Corrective action can take the form of rerouting MSR drains, the use of fresh polishers and demineralizers, or a program for the addition of boric acid to neutralize caustic conditions in the crevices in the steam generators.

4.2.1.3 Chlorides

The concentration of chlorides is limited in order to minimize chloride stress corrosion. Chlorides cause stress corrosion cracking (SCC), which is a relatively fast failure; they also cause denting in recirculating steam generators. Sources of chlorine include condenser leaks, polisher resin throw, and poor quality makeup water.

Corrective actions consist of identifying the source and using fresh polishers and/or demineralizers.

4.2.1.4 Sulfates

Sulfates cause intergranular attack (IGA), which is an aggressive form of corrosion. It is a slow process but is the most damaging to the steam generators. Sulfates can exist in many different complex forms and can hideout in crevices within the steam generators.

Sources of sulfate include condenser leaks, cation resin leakage, oils, and organic substances in makeup water (this is a bigger problem in the summer).

Corrective action includes minimizing resin leakage and hot soaks (that is, between 300 to 400°F [149 to 204°C]) of steam generators on unit shut down to facilitate hideout return.

4.2.2 Specific Problems Affecting PWRs Due to Ingress of Contaminants

4.2.2.1 Denting in Steam Generators

Denting is a combination of general and stress corrosion at the support plate in the steam generator. General corrosion causes a growth of the support plate that squeezes (dents) the steam generator tubes, thus allowing stress corrosion attacks on the tube on the primary side, eventually leading to tube failure.

4.2.2.2 Intergranular Stress Corrosion Cracking

Intergranular stress corrosion cracking (IGSCC) is localized corrosion that normally occurs in the crevices between the steam generator tubes and the tube support plates. The corrosion occurs at the grain boundaries of the metal and can result in through-wall cracking of the tube.

4.3 Effects of Water In-Leakage in BWRs

Water in-leakage will increase the specific activity of ionic species (chloride, sulfate, silica, sodium) in the hotwell/condensate system. The amount of leakage that can be tolerated by a specific plant is based on the removal capabilities of condensate purification equipment. For example, a plant with deep-bed demineralizers can tolerate higher leak rates or leakage for a longer period of time than plants with pressure precoated filter/demineralizers.

Although it is desirable to maintain the hotwell as clean as possible, the economics of fixing in-leakage must be analyzed so that the appropriate opportunity to identify and correct the leakage can be selected. Items that should be considered in the decision-making process include but are not limited to:

- Resin costs due to the leaks
- Expected dose costs for identification and repair at full or reduced power
- Load drop requirements to drain loops
- Cost of replacement power
- Cost of de-optimized core management
- Date of next scheduled load drop

When analyzing the above cost considerations, the long-term effects on the material of the construction of the BWR need to be analyzed to ensure that maximum material longevity can be maintained. The following examines several dominant impurities and their effect on cracking.

4.3.1 Silica In-Leakage

Silica is the major impurity in BWR coolant with concentrations typically 20 to 100 times greater than other impurities. It is the concentration levels of this impurity and the complexity of silicate chemistry (coordination, stability, etc.), along with the limited understanding or characterization in operating BWRs, that focuses attention on silica. The effects of silica chemistry on steels and Zircaloy cladding have also been addressed. Recently published research using fracture mechanic specimens indicates no effect on the cracking kinetics of sensitized Type 304 stainless steel for 1000 ppb silica concentrations under very carefully controlled experiments. The majority of the evidence indicated that silica has negligible effect on IGSCC at concentrations below 500 ppb, although an increase in silica will carry over and cause damage to turbine blades [5].

4.3.2 Sodium In-Leakage

It is believed that sodium (or potassium) does not directly affect crack growth rates. Rather, it is the balancing anions that are responsible for stress corrosion cracking (SCC) enhancement [5].

Because sodium is one of the most loosely held cation ions on resin, the effects of sodium leakage through the demineralizers or filter/demineralizers will cause the sodium concentration in the reactor to increase. The effects of increased sodium concentration will have variable effects on a plant that is dependent on chemistry control schemes.

For plants without hydrogen water chemistry (HWC), the effects would be minimal. The increase in sodium would be controlled for the most part by reactor's cleanup system. This formation of sodium hydroxide will increase pH and ultimately shift the ammonia-ammonium hydroxide equation to form more ammonia which will transport more nitrogen 16 past the main steam line radiation monitors (MSLRM), increasing the indicated radiation levels. In extreme cases, if left unchecked, this increase in MSLRM levels could cause a reactor trip.

For plants using HWC, the effect on the increased MSLRM levels is more dramatic because the nitrogen-16 levels are already elevated, and slight changes in pH have a larger effect on radiation levels of the MSLRM; although plants that use HWC with noble metal injection would see an effect similar to plants without HWC because the hydrogen injection rate is greatly reduced.

4.3.3 Chloride In-Leakage

Chloride is nearly as detrimental as sulfate with respect to SCC in BWR materials. Aside from being one of the most potent promoters of inter-granular stress corrosion cracking (IGSCC) in sensitized stainless steel. Chloride also promotes transgranular stress corrosion cracking (TGSSC) of annealed stainless steel plus pitting and crevice corrosion. Chloride accelerated all forms of corrosion [5].

4.3.4 Sulfate In-Leakage

It is well documented that sulfate contamination, resulting from cooling water in-leakage, regenerate chemical in-leakage, resin ingress, or resin decomposition, is the most detrimental ion relative to environmentally assisted cracking of materials in the BWR environment [5].

4.4 References

1. *Evaluation and Improvement of PWR Secondary-System Oxygen Control Measure.* EPRI, Palo Alto, CA: July 1983. Report NP-3030.

2. *Secondary Chemistry Philosophy*. Duke Power, Nuclear Generation Department, Training.

3. Preal, et al, *Behavior of Oxygen and Corrosion Products in the Indian Point 2 Feedwater System*. NWT paper number IWC-78-18 (WWT 139).

4. *Effect of Changing the Hydrazine Injection Point at the Carolina Power and Light H.B. Robinson Plant.* EPRI, Palo Alto, CA. Report NP-2270. Research Project 5132-2.

5. *BWR Chemistry Guidelines*. EPRI, Palo Alto, CA: 1996 Revision. Report TR-103515-R1.

5
INDICATORS OF WATER IN-LEAKAGE

Typical power plant condensers receive exhaust steam from the low-pressure turbine and condense it to its liquid state for reuse. Large volumes of cooling water (also called circulating water) are provided to absorb the heat given off by the condensing steam – typically 50 to 80 times the mass flow of steam [1]. With the condensing steam typically generating a vacuum of 1.0 to 4.5 in. HgA (3.4 to 15.2 kPa), any leakage present will travel from the cooling water (tube) side to the condensing steam (shell) side. Although the condensing steam (condensate) must be kept extremely pure, the cooling water chemistry is usually maintained at higher levels of impurities. This is the result of using raw water drawn from lakes or rivers or cycled through cooling towers, together with any chemicals added to control biological fouling or scale, or to control silt. Thus, when condensate contamination occurs, the amount depends on the chemistry of the cooling water, that is, whether it is seawater, brackish water, or freshwater, as well as the size of the leak.

It is certain that circulating water in-leakage into the condenser has been the major source of impurities introduced into the condensate and, thus, has been a major factor in boiler corrosion. There are a number of possible causes of water in-leakage, including:

- Use of tube materials, such as admiralty brass, that are susceptible to erosion/corrosion
- Improperly rolled tube joints
- Poor condenser design leading to tube failures caused by steam impingement or from damage by other components loosened by steam impingement
- Improperly supported tubes, which can lead to tube vibration failures [2]
- Tube manufacturing defects
- Galvanic incompatibility of materials
- Underdeposit pitting corrosion

5.1 Condensate Chemistry Changes Caused by Condenser In-Leakage

Circulating water leakage into the shell side of the condenser may become extremely serious because it allows corrosives and other undesirable dissolved solids to gain entry into the condensate hotwell. Condensate polishing demineralizers, if available, deplete rapidly and are not a long-term solution to the problem. Left unchecked, leaks will eventually cause serious damage to the piping, steam generators (or boilers), and turbines. Required response times for such leakage events are generally short and governed by the chemical composition of the circulating water and the size and number of leaks. The minimal response to a water in-leakage

is to reduce power to a point where steam flow into the tube bundles that will then remain in operation does not exceed the normal full power flow rate when all bundles are in service. For units with waterbox isolation capability, chemistry or online leak detection can determine the tube bundle that contains the leak(s). The tube bundle is then isolated and the leaking tubes can be identified and plugged (see Sections 6 and 7 for details). If the leak(s) cannot be located, a full forced outage may be required.

Since the effect of condenser in-leakage on condensate, feedwater, and steam generator (boiler) chemistry can range from subtle to dramatic, depending on the size of the leak(s) and the chemistry of the circulating water, each plant must plan its own chemistry response to a condenser in-leakage event. For example, plants using seawater as their source for circulating water see very large chemistry changes in the condensate for very small leaks because of the large amount of total dissolved solids (TDS) in seawater. Plants operating with a relatively pure freshwater lake as their source for cooling water may see only minor changes in the condensate during even large condenser in-leakage events. If such plants have recirculating steam generators, they may see chemistry changes in the steam generator blowdown before it can be detected in the condensate because of the concentration factor within the steam generator.

5.1.1 Specific Conductivity

Generating units that maintain close to pure water chemistry (for example, BWRs) and have an on-line conductivity that is near theoretical (0.054 μmhos/cm) often use specific conductivity as an indicator of condenser water in-leakage.

5.1.2 Cation Conductivity

Most plants use continuous monitoring of cation conductivity in the condensate, feedwater, and/or steam generator blowdown as the primary indication of the presence of condenser in-leakage [3]. Cation conductivity has historically been used to detect trace levels of anions by passing the sample through cation resin in the hydrogen form and exchanging the cations in the sample with the hydronium ion [4]. For example, if water contaminated with sodium chloride is passed through a resin column containing cation resin, the reaction is:

$$[\text{Resin}]\text{-}H^+ + Na^+Cl^- \rightarrow [\text{Resin}]\text{-}Na^+ + H^+Cl^- \qquad \textbf{Eq. 5-1}$$

Equation 5-1 indicates that passing the sodium chloride solution through the cation resin column converted it to a hydrochloric acid solution. The equivalent conductance of typical anions and cations is 50–80 siemens-cm^2/equivalent, whereas the hydronium ion has an equivalent conductance of 350 siemens-cm^2/equivalent. The net effect is to remove cationic species impurities and convert the anions to their acid forms, dramatically increasing the conductivity of the solution. Thus, trace levels of in-leakage can be more easily detected.

Cation conductivity is easily measured and can be monitored on-line by a fairly simple and rugged apparatus. Thus, continuous on-line monitoring of cation conductivity in the condensate, feedwater, and/or steam generator (boiler) is usually the primary method of detecting the presence of a condenser leak.

5.1.3 Sodium

Since sodium is the principal cation present in most cooling waters, sodium monitoring is often used to detect condenser in-leakage, usually as a backup to conductivity monitoring. Sodium is also highly corrosive to power plant equipment, so sodium limits are found in the water chemistry of most power plant systems. Because of this, most plants have on-line sodium monitors installed, even though on-line sodium monitors are more expensive and require more attention than on-line cation conductivity monitors.

On-line sodium monitors are designed to continuously monitor trace levels of sodium in relatively pure waters. Typical on-line sodium monitors measure sodium content from 0.1 to 1000 ppb, but higher or lower ranges are possible, particularly in microprocessor controlled instruments. An on-line sodium monitor is based on a sodium specific ion electrode, which responds logarithmically to changes in sodium ion concentration as described by the Nernst Equation:

$$E = E_0 + 2.3 \left(^{RT}/_{nF}\right) \log C$$

where:

E = measured electrode potential, mV
E_0 = reference potential (a constant), mV
R = Ideal gas constant
T = sample temperature, K
n = Valence of the ionic species (= 1 for sodium ions)
F = Faraday Constant
C = effective concentration (activity) of the ionic species

Temperature and sodium ion concentration are the only variables that determine electrode potential, E. The theoretical response of a sodium electrode is 59.16 mV for a 10-fold change in sodium concentration at 25°C. This is referred to as the electrode slope. Since each electrode is unique, each electrode has its own intrinsic slope that should be close to 59.16 mV/decade. Two calibrating solutions are typically used to determine the actual slope of the electrode.

All sodium electrodes exhibit a positive interference from hydrogen ions. To minimize this interference, hydrogen ion concentration is suppressed by raising the sample stream pH to 10.5–11.0 with monoethylamine.

A typical on-line sodium monitor works in the following fashion:

1. The sample stream is preconditioned through a cooler, filter, pressure regulator, and a flow meter/needle valve assembly.

2. The sample flow is then diverted through a passive diffusing reagent bottle where the pH adjustment with monoethylamine takes place.

3. The pH-adjusted sample then flows through the electrode compartment containing the sodium and reference electrodes, as well as a thermistor for automatic temperature compensation.

4. The sample is then directed to an atmospheric drain.

5.1.4 Chloride

Grab samples for chlorides in the condensate, feedwater, and/or steam generators are typically used to provide confirmation of the leak presence. Also, the presence of chlorides in combination with other analyte species can be use to determine the origin of the leak.

On-line chloride monitors are installed in some power plants (usually those cooled with seawater or brackish water). On-line chloride monitors can certainly be used to monitor condenser in-leakage, but as with on-line sodium monitors, on-line chloride monitors are more expensive and require more attention than on-line conductivity monitors,

5.1.5 Other Chemical Species

Other chemical species, such as sulfate and silica, can be used to establish cation-anion ratios to confirm the source of in-leakage as was described in Section 5.1.3 above. The main drawback is that it typically takes longer to complete their analysis than those methods used to determine the analysis of the other species discussed earlier. Also grab samples must be used for the analysis, since plants do not typically have on-line analyzers set up to monitor for silica and sulfate in the condensate, feedwater, and steam generators.

5.1.6 Allowable Limits

Condenser in-leakage can result in challenges to chemistry limits established to protect plant systems. These limits have been developed in plant type-specific chemistry guideline documents and are further refined by site-specific chemistry program limits. Details for setting up site-specific programs can be found in References 4, 5, and 6.

5.2 Typical Plant Response to Leakage

On-line monitors on the condensate, feedwater, and/or steam generator (boiler) blowdown will give the first indication of the leak. The leak may then be confirmed with grab samples. An estimate of the leak rate can be made using the following formula:

LR_{CT} - Condenser tube leak rate
FR_{FW} - Feedwater flow rate
C_1 - Concentration of the analyte of interest in the condensate
C_2 - Concentration of the analyte of interest in the cooling water

$$LR_{CT} = (FR_{FW})\ (C_1)/C_2) \qquad \textbf{Eq. 5-2}$$

Depending on the design of the condenser, a hotwell sample may be used to identify the tube bundle containing the circulating water leak. If the leak is too small to be detected in the hotwell sampling, lowering the power level will concentrate impurities by decreasing steam/condensate flow while the in-leakage remains constant. This should bring impurities within analytical detection limits. Personnel must, of course be made aware that lowering the power will upset any equilibrium conditions that may have been present and may change the distribution of heat and mass flows to and from various feedwater heaters, the drains from which may be returned directly to the condenser.

When the leaking bundle has been identified, its cooling water supply can then be isolated and the bundle drained. This procedure accomplishes two things:

- It significantly speeds up the identification of specific leaks by immediately eliminating any testing of bundles that are producing high quality condensate.
- It shows which bundles can be safely operated, so that only a load reduction will be necessary, not a forced outage, assuming that the condenser design permits waterbox isolation operation [7].

Power should be reduced to the point where steam flow over those tube bundles left in service does not exceed the normal full power flow rate with all bundles in service. After ventilation flow in the waterbox is established, and staging and work platforms have been placed in the waterbox, several methods of cooling water leak location can be utilized, as described in Section 6.

Isolating tube bundles sequentially is an alternative to hotwell segregation. When the leaking tube bundle is isolated, hotwell cation conductivity will change. If leaks exist in more than one bundle, however, this method may not work.

Unfortunately, if the condenser leak is large enough or is allowed to exist for too long a period of time, plant chemistry limits in the condensate, feedwater, and/or steam generator (boiler) may be challenged. A forced outage to prevent damage to plant equipment is usually the result.

5.3 References

1. F. S. Aschner. Planning Fundamentals of Thermal Power Plants. Wiley, New York 1978.

2. *Steam Generator Reference Book, Revision 1.* EPRI, Palo Alto, CA: December 1994. Report TR-103824-V1R1.

3. Design and Operating Guidelines for Nuclear Power Plant Condensers. EPRI, Palo Alto, CA: September 1991. Report NP-7382.

4. PWR Secondary Water Chemistry Guidelines – Revision 4. EPRI, Palo Alto, CA: November 1996. Report TR-102134-R4.

5. Cycling, Startup, Shutdown, and Layup Fossil Plant Cycle Chemistry Guidelines for Operators and Chemists. EPRI, Palo Alto, CA: September 1998. Report TR-107754.

6. *BWR Water Chemistry Guidelines.* EPRI, Palo Alto, CA: December 1996. Report TR-103515-R1.

7. Recommended Practices for Operating and Maintaining Steam Surface Condensers. EPRI, Palo Alto, CA: July 1987. Report CS-5235.

6
METHODS FOR LOCATING WATER IN-LEAKAGE

6.1 Introduction and Historical Background

Condenser tube leakage allows contaminants in the circulating water to transfer into the highly purified water of the steam cycle. This results in degradation of boiler components through corrosion or fouling, or decreased lifetime of condensate demineralizer resin beds if they are present. Previous EPRI studies [1,2] concluded that condenser problems in large power plants cause an average 3.8% loss in plant availability. Some of the major locations where water in-leakage can occur include:

- Unsealed waterbox flange seams
- Leaks in miscellaneous piping routed through the shell and/or waterbox
- Leaks in some tube plugs that are already installed
- Leaking hotwell components exposed to occasional submergence (hotwell pit, drain sumps)
- Through-wall penetrations in the condenser tubes, whether derived from corrosion of the inner and/or outer tube surfaces, from the velocity effects of external impingement, or from corrosion/erosion velocity damage to the inlet and/or outlet ends of tubes
- Physical damage to the tubes caused by vibration; from being heavily stepped upon; as a result of impact from falling objects, tools, or baffles coming loose; or due to internal lagging becoming detached
- Faulty tube-to-tubesheet joints, their tightness weakened by differential thermal expansion, tube vibration, and/or tubesheet degradation
- Improperly rolled tube to tubesheet joints

The nature and severity of the leak largely determine the best method to be employed in locating its source. Some of the more traditional methods of leak detection are first reviewed, but the newer tracer gas methods using SF_6 and helium have become widely accepted over the past 10 years as the standard operating procedure.

In addition, the on-line injection of tracer gas into circulating water lines has become the state-of-the-art method for identifying leaking tube bundles. The use of this technique has eliminated much of the guess work normally experienced when using less sophisticated methods and has resulted in less downtime to perform leak detection.

6.2 Conventional Water In-Leakage Detection Methods

In the past, condenser tube leakage inspections made use of shaving cream, plastic wrap, and even cigarette smoke in attempting to find the offending tube. The visual and aural senses were also used. Some individuals believed that they could find a tube leak by placing an ear on the tubesheet. Unfortunately, out of the millions of tubes that have been inspected, very few tubes have been “heard” to be leaking. Meanwhile, others believed they could locate a leaking tube by simple observation.

All of the above intuitive techniques have their shortcomings so far as reliability, accuracy, and cost effectiveness are concerned. None of these techniques offer a means of verifying, prior to putting the condenser back on line and then checking the chemistry, that the suspected tube was the one actually leaking. These techniques are not supported scientifically, and they all rely on the intuitive engineering sense of the technician.

These methods all involve draining the waterbox that is to be inspected, but the shell side of the condenser must still be under vacuum. With only one waterbox out of service, it is possible to perform a leak test under partial load. However, it is difficult to perform in-leakage testing with the unit shut down completely unless the air-removal vacuum system is able to lower condenser back pressure sufficiently when working alone. A major problem with all of these traditional methods is their uncertainty because, to ensure the leak has been sealed, not only would the tube identified as leaking be plugged but also a number of the surrounding tubes.

However, even when the leaking tube has been positively identified, “insurance plugging” can be considered good maintenance practice. Since in many cases, the exact mechanism that caused the tube to fail is uncertain, selected surrounding tubes may be plugged as insurance against additional leaks developing before the next outage. Those tubes with “insurance plugs” can then be subjected to careful eddy current testing during the next outage so that as many tubes as possible may be returned to service.

6.2.1 Smoke

This method, traditionally, has involved the use of a smoke generator. After the waterbox has been drained, a technician enters and, after partially closing the manway, then proceeds to light up and hold a smoke generator (often a cigarette) in front of individual tubes to see if the smoke is "inhaled" by the tube. However, the distance of the leak from the face of the tubesheet may affect the technician’s ability to make a positive identification.

6.2.2 Thermography

Infrared thermography (IRT) is a nonintrusive diagnostic technique that has played an important role in many predictive maintenance programs. The technique allows abnormal thermal patterns to be detected by making simultaneous temperature measurements of multiple points on the surface of a piece of equipment. The data are displayed as pictures, commonly referred to as *thermograms*, which can be analyzed in realtime or stored electronically to be analyzed later.

Most of the IRT applications within power plants have been associated with electrical equipment such as motor control centers, bus ducts, overhead power lines, transformers, and motors. Other applications include the scanning of boiler casings to locate hot spots or the source of heat loss through the casing. Not only does thermography map the differences in surface temperature, it is also able to quantify the differences.

The use of thermography to locate the source of air ingress into a power plant condenser has been more problematical, chiefly because of the smaller temperature differences created by any cooling due to air in-leakage. However, some successful cases have been reported, notably when the air in-leakage was significant.

6.2.3 Ultrasonics

As already mentioned, traditional methods used after first draining the waterbox include attempting to "hear" the air now leaking from the waterbox into the shell side of the condenser. However, placing an ear on the tubesheet is an uncertain method, and very few tubes have been heard to be leaking, especially if any ambient noise is present.

A more modern method is to harness ultrasonic devices for this purpose. Although they are far more sensitive than the human ear, these devices can also be affected by any ambient noises present. Testing must, therefore, account for these background noises.

Modern ultrasonic leak detection equipment generally includes provisions to test for air in-leakage, water in-leakage, and valve leak-by. These devices differentiate between both sonic (2 to 10 KHz) and ultrasonic (35 to 175 KHz) signals and between low-frequency (background) and high-frequency (leakage) signals. Testing for in-leakage uses a hollow-tubed probe that picks up the high-frequency signals produced by leaks. Testing for valve leak-by uses an accelerometer that is sensitive to both sonic and ultrasonic signals and produces a signal based on the gravitational constant.

Leak detection usually begins by establishing baseline readings for specific components. This can be achieved by taking measurements on newly installed components (that is, with no assumed leakage) or by taking measurements on similar components to determine the average signal level. Following this, individual components are tested on a periodic or as-needed basis to determine signal levels. When testing for leakage, the components are first visually inspected for leakage, corrosion, water accumulation, and other signs of structural deterioration. Next to be tested are high leak probability areas such as flanges and packing. If the signals do not exceed the baseline level, leakage is assumed to be zero. However, if leakage exceeds the baseline, then further investigation is required. This could include stroking the valve, valve operator adjustment, or corrective maintenance. Finally, the signal levels from these components may be trended to determine the progression of leakage.

6.2.4 Plastic Wrap

To apply this method, sheets of plastic wrap are placed over the inlet and outlet tubesheets. A search is made for any areas where the wrap appears to be sucked into a tube. It is not necessary

to cover the entire tubesheet at one time. A procedure can be adopted in which only a section of the tubesheet is covered and then inspected before moving on to the next section.

6.2.5 Foam

The foam most favored by technicians is shaving cream, substantial quantities of which have been used at both fossil and nuclear plants! The shaving cream is spread over the tubesheet, which is then inspected to see where the foam has been sucked into tubes. These tubes are then plugged.

6.2.6 Water Fill Leak Test

The unit must be shut down when using this method, in which the condenser shell is slowly filled with water, preferably with condensate that has been drawn from a condensate tank. The water level should be allowed to rise only about 2 feet (61 cm) per hour, so that just one row is submerged in the water at a time. Those tubes that are leaking may then be identified by the trickle of water that issues from the tube at either tubesheet.

Alternatively, a fluorescent dye can be added to the water to allow weepers to be visually identified using black light. Prior to adding the dye, tubesheets and tube ends should be pressure washed to remove any contaminants from their surfaces.

6.2.7 Rubber Stoppers

Two types of rubber stopper are available: solid rubber stoppers and specialty rubber stoppers with a thin membrane that covers a hole formed through the stopper. Both types have been used successfully to locate tube leaks when the condenser is under vacuum.

To check a tube for leaks using solid rubber stoppers, one stopper should be installed in each end of the tube and allowed to stay in place for as long as 12 hours. If leaking, the tube is now under vacuum. Thus, when later removing the stopper from one end, personnel can confirm that the tube is leaking by noting the additional force that had to be exerted to remove the stopper.

Specialty membrane rubber stoppers are used in conjunction with solid rubber stoppers; one of the membrane type is installed in one end of the tube while a solid rubber stopper is placed in the other. The suction created within a leaking tube results in a visible depression on the membrane covering the end of the specialty rubber stopper. Since membrane rubber stoppers do not require a long soak time, even small leaks can be detected in a few minutes.

6.2.8 Individual Tube Pressure/Vacuum Testing

It is also possible to identify tube leaks by pressure or vacuum testing individual tubes. Testing is accomplished by blocking both ends of a suspect tube, pressurizing or evacuating the tube, and then observing if there is a loss of pressure or vacuum over a period of time. Additionally, pressure testing by pneumatic or hydrostatic means can be used to proof test a tube. A few

minutes spent using this method to test one or two rows of tubes surrounding a suspect or leaking tube will not only confirm the leak, but will also identify any additional leaking tubes, and may even eliminate the need to install insurance plugs. However, if the objective is to test the entire condenser, some other in-leakage test method outlined earlier may offer a faster solution.

6.3 Eddy Current Testing

Eddy current testing (ET) is the technique used to locate or avoid future tube leaks. The technique allows a determination of whether condenser tubes have become pitted, corroded, or cracked. It also provides an estimate of the depth of such blemishes, as well as their angular location; and their distance along the length of the tube can also be established. ET is a nondestructive test technique that causes electrical currents to be induced in the material being tested; the associated magnetic flux distribution within the material then is observed. Because the results from eddy current testing can be affected by a number of factors, successful eddy current testing requires a high level of operator training and awareness.

There are two schools of thought as to whether tubes should be cleaned prior to eddy current testing. Clearly, obstructed tubes should be cleared in order that the ET probe can pass through. However, some practitioners believe that a general cleaning will cause important failure mechanism information to be lost. Others are more concerned with being able to compare data from one test to another and prefer to clean the tubes thoroughly so as to provide a firm basis for data comparison, uninfluenced by any metal-containing deposits. Their position is that, by bringing the tubes to a clean state, the possible effects on the electromagnetic flux distribution of any deposits present will be minimized.

In either case, before testing the actual condenser tubes, the ET system must first be calibrated using a sample of the same tube material. Probes are usually either of the bobbin or surface type, and for best results, the effective diameter of the probe should be close to that of the inside diameter of the tube, due allowance being made for tube manufacturing tolerances.

The information obtained from ET conducted at several points in time can also help in scheduling maintenance and planning a tube replacement or plugging strategy, all with a view to extending the tube life of the condenser as well as to avoiding unscheduled unit outages.

In the eddy current testing of condenser tubes, there are at least four kinds of damage that might be detected:

- Corrosion pitting
- Crevice corrosion
- Fractures caused by tube vibration
- Through wall penetrations

In the first three, the depth of penetration is an important benchmark, influencing a decision whether to plug the tube as a precaution against future leaks. The identification of through-wall leaks will of course call for them to be plugged when all the testing has been completed.

6.3.1 Eddy Current Data Acquisition and Processing Practices

While water in-leakage testing methods, especially those using tracer gases, can quickly locate the tube that is the source of a leak, it is not a technique that can establish the overall condition of the condenser tubing and so contribute toward future and informed maintenance planning. However, even though eddy current testing is able to provide this information, testing is often conducted only when tube leaks are of frequent occurrence and become so severe that they cannot be ignored if a forced outage is to be avoided.

Putman and Kocher [3] suggested that a better approach is to conduct routine eddy current testing on at least a yearly basis, so that the progress of corrosion can be monitored and the effects of any mitigation steps quantified. Clearly, these data have to be archived, able to be accessed without difficulty; and the test results analyzed and even plotted. The results from each inspection can then be intelligently compared with those from previous years. A properly planned program would also allow a comparison of the progress of corrosion on similar units at the same site. Experience has shown that only through careful long-term planning can the greatest benefits from eddy current data acquisition and subsequent processing be realized.

6.3.1.1 The Planning of Eddy Current Testing

The method of performing a planned test must be carefully specified. Data trending and evaluation are also important parts of the overall project. In this way, the results of each test can be compared and sound judgements can be made regarding the effects of different maintenance methods, as well as the rate of tube deterioration.

Part of the planning process involves:

- Writing well thought through eddy current test procedures for the whole set of annual or periodic tests
- Insisting that the tests are conducted in exactly the same way for each inspection
- Making use of the same calibration pieces and the same type of equipment for each test
- Employing only operators who have each been subjected to the same training and qualification requirements. (ASME Boiler and Pressure Vessel Code, Section V, Appendix 8 - ASNT SNT-TC-1A)

In the U.S., where the bidding process may result in a different contractor being employed for each inspection, the necessity for a common procedure ensures that eddy current data from one inspection can be compared with confidence with the data from inspections conducted in earlier years. Without such formal procedures and owner supervision to ensure that they are implemented, reliable data trending is virtually impossible.

Some may object that such firm adherence to established procedures tends to inhibit technological advances. It is certainly true that they will be introduced more gradually. But, while the absolute values obtained from eddy current testing are important in determining the damage mechanism and the appropriate corrective action to be taken now, for example, which

tubes to plug, the ability to determine the rate of change of corrosion is just as important with regard to planning when, or even whether, to retube.

6.3.1.2 Tube Map

The whole tube map should be defined at the outset and the tube numbering maintained throughout the life of the unit and for all examinations. The configuration of this map should be well controlled and changes made only in a very orderly fashion. Tubes that have been plugged should be clearly identified, and at each inspection, the previously installed plugs should be checked to make sure that they are still in place.

6.3.1.3 Benchmark Data Set

It is important to have a benchmark ET data set for the condenser tubes, taken preferably before the unit is first started up and against which future changes can be compared. The eddy current calibration tube should preferably be taken from the same manufacturing batch as the tubes installed in the unit itself. The calibration standards should be stored in a known place and used for each subsequent examination of the condenser or heat exchanger.

6.3.1.4 Data Comparisons and Trending

The program used to analyze the data need not be extremely sophisticated and so become a major systems engineering project. For example, some users have written their own BASIC language program having about 2400 lines of BASIC code. The data for each inspection should be contained on a separate disk so that each inspection can be analyzed independently. In the comparing mode, the data from several inspections should be able to be read in, one set at a time, processed, and then compared.

Since the creation of tube maps can be performed only for one set of inspection data at a time, the plotting program can be separate from the analytical program, if it is written to accept the same data file layout and format.

The comparison of data sets, or trending, is made easier if 100% of the tubes are inspected every time. However, if only a subset of tubes is to be examined, this procedure requires more careful planning to ensure a high level of data continuity from one inspection to another.

6.3.1.5 Maintenance Practices

In order that changes in corrosion rate can perhaps be correlated with procedural changes, it is important to log all changes in maintenance practice as they occur. For example, at one site, mechanical cleaning was identified as the cause of the reduced corrosion rate. Changes in water treatment practice should also be logged, and a summary of all of these changes provided to the inspector before a new eddy current inspection is carried out.

6.3.1.6 Figures of Merit

The term *figures of merit* as used in the analysis of eddy current tests is the generic name applied to various criteria used to compare the test results. Figures of merit have different criteria in the case of a condenser compared with those for a heat exchanger. With heat exchangers, considerations of meeting the Pressure Vessel Code override questions of mere wall penetration. On any given plant, there should be some agreement on how corrosion figures of merit will be defined when evaluating eddy current test results.

Some condenser users have chosen as a figure of merit the mean annual corrosion rate and have used this to predict when a condenser should be retubed. Other figures of merit may be based on the square root of the sum of the mean of the squares of the corrosion depth. Conley [4] suggested three possible criteria:

- Equilibrium corrosion rate
- Time weighted average equilibrium corrosion rate
- Average corrosion rate

Figures of merit can also be used as tube plugging criteria although, as the number of plugged tubes increases, the reduced capacity of the condenser to remove latent heat must also be taken into account.

6.3.1.7 Management Report

It is a common complaint that eddy current test reports are so full of detailed data that it is difficult for management to appraise the results and make appropriate decisions. For this reason, it is recommended that a summary, or executive report, be provided from which management can understand the significance of the results within the carefully structured long-term plan.

6.4 Tracer Gas Methods

6.4.1 Historical Background

In an effort to increase the accuracy and reliability of condenser tube leakage detection, a method was devised utilizing a mass spectrometer and helium as the tracer gas. The project, sponsored by EPRI [2], assumed that the spraying of helium into tubes while sampling the condenser off-gas would indicate leakage. The thought was that if helium was sprayed down the tubes while the unit turbine was under power, the gas would be drawn into the condenser through the leaking tube and thus be evacuated with the rest of the noncondensables through the condenser air ejection system.

Because this was a new application for mass spectrometry, there were problems with the increased helium background, difficulty occurred with isolation of the leaking tube, and sometimes leak indications appeared when no helium had been sprayed. The initial judgement

was that the helium technique was ineffective; however, determination and perseverance triumphed.

6.4.1.1 Successful Application of Helium Technology

The first successful application of helium to detect tube leakage also used a nitrogen "kicker" to make sure that the helium traveled the full length of the tube. Helium was sprayed down the tubes for approximately 10 seconds using a plenum measuring 1 foot (30.5 cm) wide, 2 feet (61 cm) tall, and approximately 1 inch (2.5 cm) deep. Immediately after spraying the helium, an equal application of nitrogen "pushed" the helium down the tube. However, the subsequent installation of air movers in the manways on the opposite side from where the tracer gas shooting was taking place made sure that the entire length of the tube was covered by the helium. Thus, the nitrogen was no longer required. By August of 1978, the earliest helium methodology of leak detection was being performed at nuclear generating stations on a routine basis.

During that same year, the question arose as to whether the application of helium mass spectrometry could be used to locate the source of condenser air in-leakage, and testing was initiated using a mass spectrometer and helium as the tracer gas. Early problems with this method of air in-leakage inspection included the increase in background helium, how to pinpoint leakage (whether it is leaking at the packing or the flange), and the fact that helium, being lighter than air, tends to rise. In spite of initial ambiguities in data interpretation, experience showed that the greater the number of inspections performed by a technician, the faster the learning curve was climbed, and the accurate interpretation of the data displayed on the strip chart recorder became routine.

As the proficiency of technicians grew and the "art" of tracer gas leak detection became standard practice within the utility industry, generating stations were reducing condenser air in-leakage as well as promptly locating condenser tube leaks.

However, in situations where the leaks were small, where the leaks were closer to the outlet end of the tube, or where the tubes had leaking plugs, it was found that testing with the on-line injection of helium into the circulating water frequently did not provide any leak indication. Using helium to discover the source of dissolved oxygen leakage was also unreliable. It became clear that a tracer gas with higher sensitivity was needed since it could no longer be inferred with certainty that the absence of a helium indication meant the absence of a leak.

6.4.1.2 Introduction of Sulfur Hexafluoride (SF_6) as a Tracer Gas

Thus, it was natural in the evolution of tracer gas leak detection that a more sensitive tracer gas would be sought. In 1976, Simmonds and Lovelock [5] had found in England that SF_6 could be used very effectively as an airborne tracer in atmospheric research [6]. The utility industry in the U.S. was also exploring the path of plumes from smokestacks and cooling towers and the same tracer gas was used. The fundamental property of SF_6 is that it can be detected in very low concentrations, as low as one part per 10 billion (0.1ppb), compared to the lowest detectable concentration of helium of one part per million above background. It was later found that on-line

injections utilizing SF_6 also allowed leaks as small as one gallon (3.8 liters) per day to be detected.

Sulfur hexafluoride, discovered in 1900, is a colorless, tasteless, and incombustible gas that is practically inert from a chemical and biological standpoint [7]. It does not react with water, caustic potash, or strong acids and can be heated to 500°C without decomposing. One of its common uses within the utility industry is for arc suppression in high-voltage circuit breakers and the insulation of electric cables. SF_6 also has many other uses, such as in medical equipment, increasing the wet strength of kraft paper, and the protection of molten magnesium in the magnesium industry.

6.4.2 The Implementation of Tracer Gas Leak Detection

A number of projects to study surface condenser leak detection employing gaseous tracer technology have resulted in some excellent publications in the last 10 years. Most studies enjoyed EPRI sponsorship [8,9,10] and endeavored to establish in-house condenser leak detection capabilities in electric power plants. In attempting to translate this information into actual capabilities, however, plant personnel have met with mixed success. In most instances, personnel designated for leak detection at power plants have numerous other duties, thus prohibiting them from spending the substantial amount of time required to master the application of this method. This guideline is an effort to reduce the time required to master the art of condenser leak detection.

Gaseous tracer leak detection of any sealed container requires that a pressure differential exist between the interior and exterior of the component being tested. The tracer gas is placed in the area of higher pressure and migrates through leak paths to the lower pressure area. If the interior pressure of the component is higher than the exterior, the tracer gas is injected into the container, and tests are conducted to detect if it is present at the exterior surfaces. Reverse the pressure orientation and the gas must be released over the exterior surfaces and tests then conducted to detect if it is present inside the container. The latter method is the one used for testing surface condensers.

The technology of surface condenser tracer gas leak detection is straightforward. A detector probe is installed in the noncondensable off-gas exhaust stream, and a tracer gas appropriate for the chosen detection system is released in proximity to the suspected condenser leak paths. The tracer gas may be either helium or SF_6. The tracer gas enters the condenser shell through the leak and is propelled by the steam flow toward the condenser air-removal section where, in the course of being removed and exhausted, it passes by the detector probe. Note that steam flow plays an inherent role in the condenser pumping action required for tracer gas leak detection. Only a small portion of the off-gas is drawn into the probe and through the detection system, which analyzes the concentration of the tracer gas. The resulting signal can be read on a display and also recorded on a strip chart recorder, which provides a permanent record of the test. An equipment operator monitors the display and relays the information to the person dispensing the tracer gas, but over sound-powered headphones, since FM radio signals can affect equipment operation.

6.4.3 Leak Detection Equipment

The equipment required for condenser tracer gas leak detection, for both helium and sulfur hexafluoride, includes gas release and sampling equipment, as well as the gas analyzing equipment described in detail in the following section. While the analyzer described below is a commercially available instrument for use with SF_6, other instruments for both helium and sulfur hexafluoride operate in a manner similar to the one described.

6.4.3.1 Sulfur Hexafluoride (SF_6) Analyzer

The analyzer is comprised of panel-mounted flow meters, potentiometers, valves, and a digital readout device that provides the controls necessary to establish sampling conditions and to indicate the presence of SF_6 in the sampled off-gas (Figure 6-1). The understanding of the analyzer operation is of paramount importance to the efficient and effective utilization of the leak detection technique.



Figure 6-1
Gas Analyzer

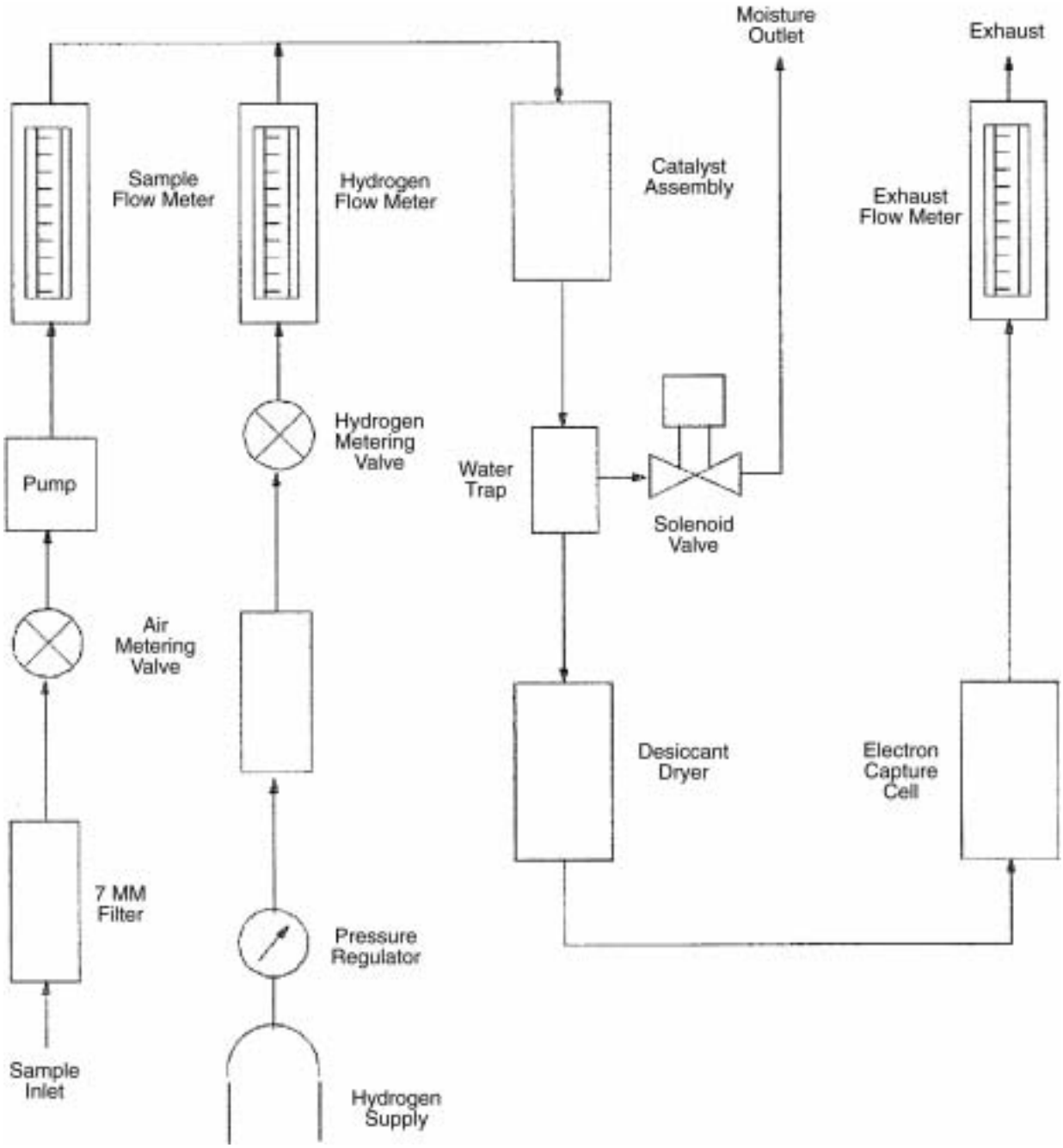

Figure 6-2
Schematic Flow Diagram of the Off-Gas Sample Through The Analyzer

Figure 6-2 shows a schematic flow diagram of the off-gas sample through the analyzer. The device used to detect the presence of SF_6 in the sample is an electron-capture cell, shown in Figure 6-3, which is comprised of two electrodes and a foil of radioactive material (nickel-63) to ionize the nitrogen molecules. A 40-volt differential maintained across the two electrodes (anode and cathode) causes a minute electric current (standing current) to flow across the air gap between the two electrodes. Sample gas is pumped into the cell, where it passes between the electrodes, and is ionized by the radioactive foil. The nitrogen in the sample gas, now ionized,

supports a current flow across the gap. Since ionized SF_6 is electrophilic (meaning that it will capture electrons) the level of the current is reduced in proportion to the amount (concentration) of the tracer gas present in the sample

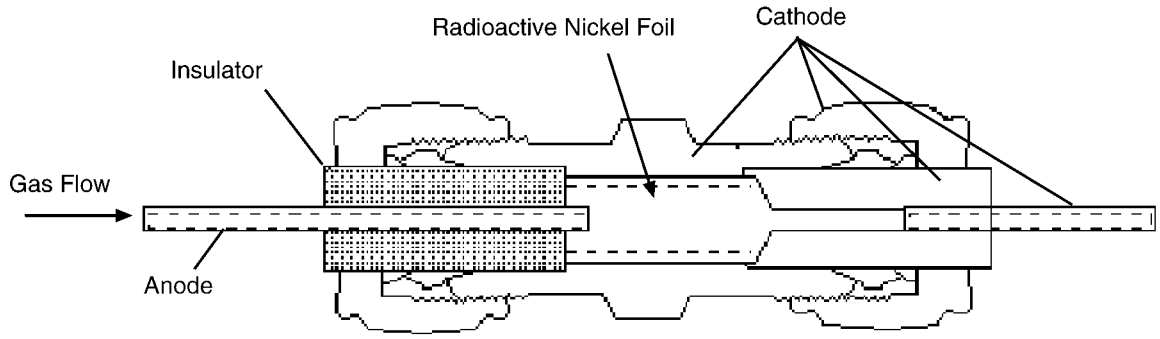

Figure 6-3
Electron Capture Detector

Other factors also affect the standing current. Any oxygen or water vapor present in the sample will reduce the standing current. The analyzer, therefore, removes oxygen and water vapor from the incoming sample gas. To remove the oxygen, hydrogen gas is introduced into the sample gas stream. This mixture enters the analyzer catalytic reactor and heater unit (refer to Figure 6-2), where the catalyst assembly permits a chemical reaction to occur between the hydrogen and oxygen in the sample gas. Water is the product of this reaction, as governed by the equation:

$$2H_2 + O_2 \leftrightarrow 2H_2O + HEAT \qquad \textbf{Eq. 6-1}$$

If the hydrogen is metered properly, no oxygen and very little excess hydrogen will be found in the sample after it has passed through the catalytic reactor and heater unit.

Most off-gas streams contain water vapor that must be removed by the sampling treatment system. However, water vapor is also produced in the oxygen removal process and, since water is detrimental to standing current (and hence sensitivity), the analyzer contains a drying system. Water vapor exiting the catalytic reactor passes through a coalescing filter where the majority of the water is removed. To dry the sample further, it is passed through a desiccant before entering the electron capture cell. With the oxygen and water now removed, the nitrogen-rich sample stream provides the maximum attainable standing current and sensitivity.

6.4.3.2 Tracer Gas Release Package

The release package provides a convenient means of releasing SF_6 in the concentration necessary for air in-leakage testing, as well as test shots for both air and tube leakage tests. Because of the sensitivity of this technique, it is not necessary or desirable to use pure (100%) SF_6. The commercially available device is a hand-held battery-powered unit that meters a precise amount of pure SF_6 into a dilution stream of ambient air (see Figure 6-4). It operates on a rechargeable internal battery pack with sufficient capacity to power the unit for the duration of an entire air in-leakage inspection. A refillable aluminum reservoir bottle contains the SF_6 and holds enough gas for many tests. The device is equipped with a pressure switch that interrupts operating power

if gas pressure falls below the required level. Thus, when the contents of the vessel have been expended, this switch prevents the possibility of testing with dilution air only.



Figure 6-4
Tracer Gas Release Device

The concentration of the discharge mixture, nominally 1000 ppm, can be controlled by adjusting the delivery pressure on the regulator. The ability to vary the discharge concentration allows the operator to decrease the concentration if background levels begin to rise. However, if the background level remains steadily low, the SF_6 concentration can be increased for difficult areas such as leakage below the condenser hotwell water line. A three-section telescoping aluminum probe allows the tracer mixture to be directed accurately over the suspected leakage areas. It also enables the operator to reach areas difficult to access. Two switches control the release of the tracer. One controls the dilution air fan, and the second opens the solenoid-controlled valve discharging the pure SF_6 into the dilution stream.

6.4.3.3 Sampling Equipment

The purpose of this equipment, shown in Figure 6-5, is to draw a representative sample from the condenser air-removal system, to cool and dry it, and then to transport it to the analyzer. Since moisture will significantly affect the operation of the analyzer, complete removal of moisture from the sample gas is desirable. When using a pump to draw an off-gas sample from the air-removal system, it is important to confirm that air is not leaking into the sampling system on the vacuum side of the pump. Air leaking into the system will reduce the concentration of the tracer gas in the off-gas, therefore reducing the overall sensitivity and effectiveness of the test. Prior to beginning component testing, the sampling system itself should be tested for leakage by releasing diluted tracer on those connections between the sampling system components that lie upstream of the sampling pump.

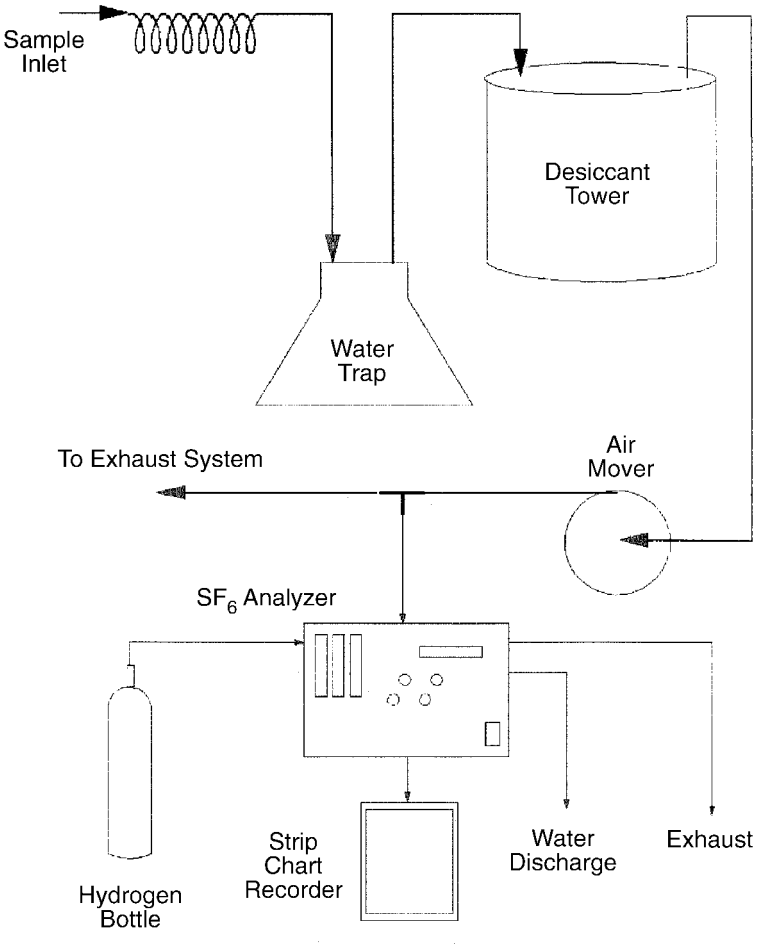

Figure 6-5
Schematic Diagram of SF_6 Sampling System

6.4.3.4 Portable System

A typical system is described but other systems may be used to accomplish the same objectives. Generally, 3/8-inch (9.5-mm) polyethylene tubing is used for all interconnections between sampling components. The first section of tubing starts at the air-removal sampling point and extends to a 1/4-inch (6.4-mm) copper cooling coil approximately 5 feet (1.5 m) in length. The coil is placed in a bucket of cold water or, if the gas sample is thermally hot, in a bucket of ice water. If the temperature of the off-gas is unusually high (that is, greater than 200°F or 93°C), the copper is extended to the sampling point connection on the air-removal system. The next component in the system is a 2-liter polypropylene flask that acts as a water trap. The flask is fitted with a drilled rubber stopper that has an inlet (longer section of tubing) and an outlet (short section of tubing). Upon exiting the water trap, the sample gas is directed through a silica gel desiccant tower that substantially lowers the dewpoint of the gas. A carbon vane pump draws the sample through the sampling system at a rate of 1 cfm (28,317 cc/min); the discharge of the pump is routed to the sampling tee at the entrance to the analyzer. The analyzer itself draws approximately 125 cc/min, and the remainder of the sample is discharged to the atmosphere (see Figure 6-5).

6.4.3.5 Permanent Cabinet-Mounted System

In a permanent configuration, the system off-gas enters a spiral copper cooling coil. A fan forcing air over the coils provides convection cooling, which removes the latent heat from the sample as it is conducted through the copper tubing. Any condensate forming in the coil is collected by two coalescing filters, arranged in series. A panel-mounted sight glass provides an indication of the level of the removed moisture. The moisture trapped by the filters is valved to a drain pan where it evaporates. After the off-gas sample passes to the filters, it flows through a desiccant tower for further moisture removal. A flow control valve and associated flow meter are used to adjust the system flow rate delivery to the analyzer. A diaphragm pump ensures that sufficient pressure is available to deliver the treated off-gas to the sample inlet connection of the analyzer (Figure 6-6).

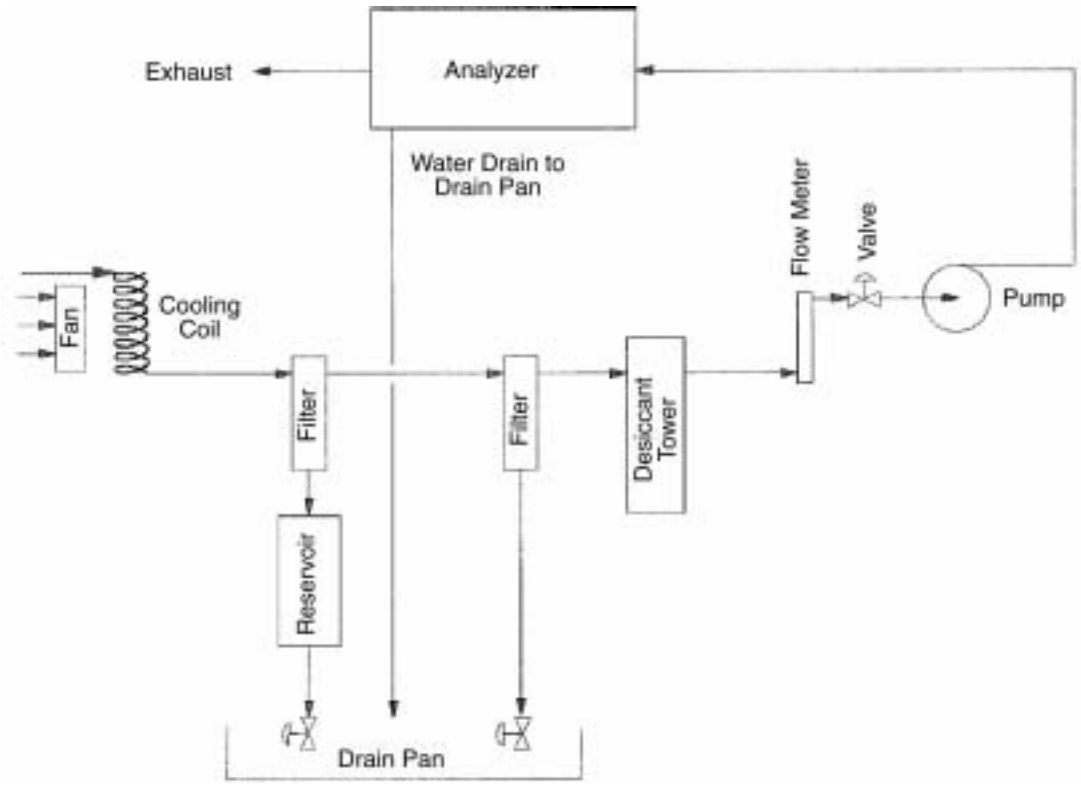

Figure 6-6
Schematic Diagram of Cabinet-Mounted Sample Treatment System

6.4.3.6 Test Shot Equipment

To ensure proper operation of the analyzer, it must be confirmed that sample system connections are complete and tight and, most importantly, that the air-removal system is valved-in correctly. A test shot is then made prior to the start of an inspection. A 0–30 standard liters per minute (slpm) flow meter is sufficient to set a bleed rate of approximately 1 SCFM into the selected test shot point. Since the flow meter is monitoring air flow into a vacuum, it is equipped with a top-mounted valve. This configuration eliminates the need for rotameter pressure corrections because the float chamber is isolated from the vacuum by the valve. After the sampling and analyzing

equipment is set up and operational, the diluted SF_6 is released in a 3-second burst into the 1 SCFM test leak. The response resulting from this injection will indicate the magnitude of the response that can be anticipated from leaks of this approximate size.

6.4.3.7 Injection Equipment for Water In-Leakage Detection

The purpose of an injection setup, whether permanent or temporary, is to accurately meter pure SF_6 into the circulating cooling water system to determine if condenser-tube leakage is present in a specific condenser section. Identification of the water boxes that have condenser tube leaks is possible while the unit is on-line and at full power. The SF_6 tracer is carried with the cooling water through the tube side of the condenser. If there are any leaks, the tracer is collected by the air-removal system on the shell side with other noncondensable gases. The exhaust gas of the air-removal system is then analyzed for the presence of SF_6, and the presence of the tracer indicates a condenser tube leak in the water box being tested.

6.4.3.8 Portable or Temporary System

A 115-lb. bottle of industrial grade SF_6 is used for injection testing. Smaller bottles are acceptable but are often more difficult to acquire from local gas suppliers. A high-flow line regulator is mated to the bottle through a CGA 590 regulator nipple. The regulator has an outlet delivery pressure capacity of 150 psig (10.5 kg/cm^2). A 0–15 SCFM rotameter rated for 200 psig (14 kg/cm^2) is the next component in the system. It is equipped with a metering valve so that the SF_6 injection rate can be controlled. A 1/2-inch (1.3 cm) rubber hose 25 feet (8 m) in length is connected directly to the outlet of the flow meter terminating with a double-ended shutoff quick disconnect. The mating half of the quick disconnect is installed at the waterbox penetration selected. Figure 6-7 illustrates the equipment necessary for the portable system.

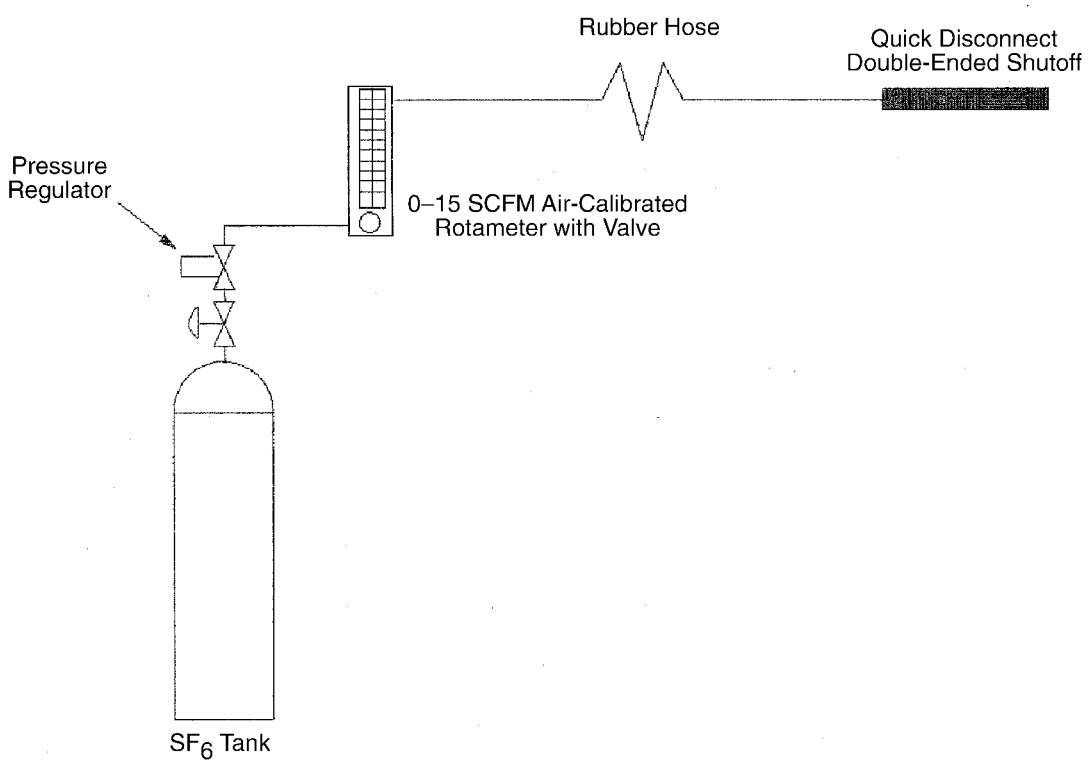

Figure 6-7
Portable SF_6 Injection System for On-Line Waterbox Testing

6.4.3.9 Permanently Installed Injection System

The permanent (on-line leak detection system - OLDS) injection system is comprised of the following components, generally arranged in the configuration shown in Figure 6-8:

- SF_6 station (including the manifold and regulator)
- Injection panel

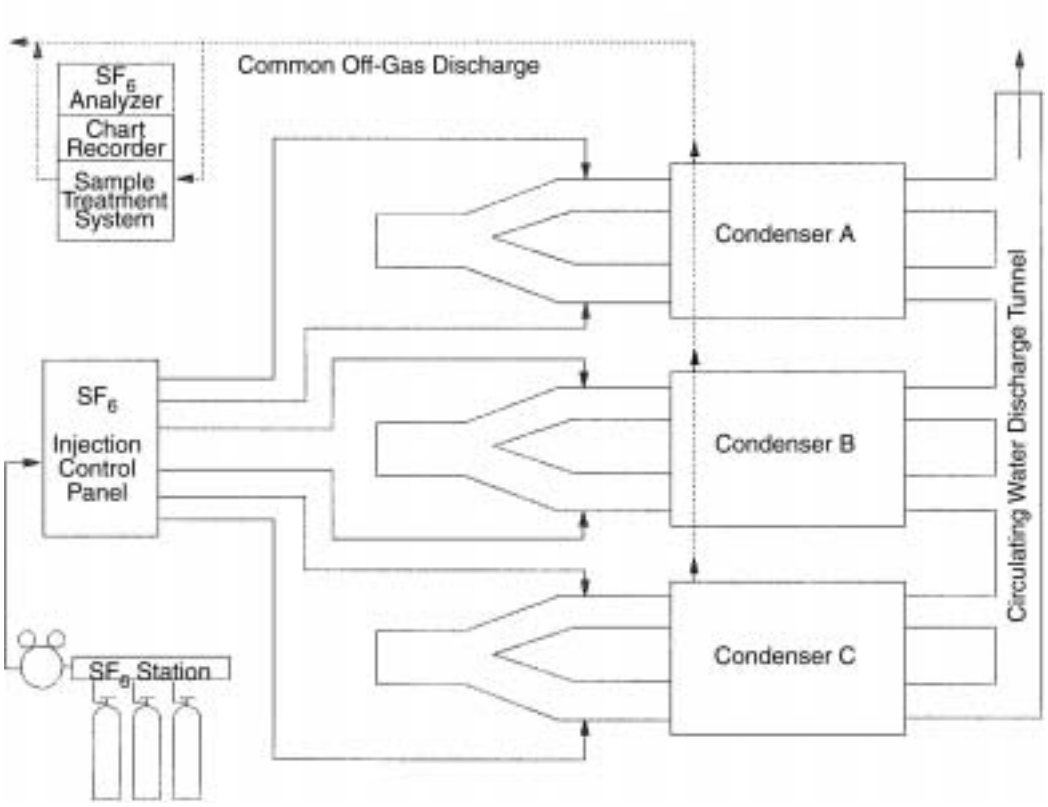

Figure 6-8
Component Configuration of Permanently Installed On-Line Leak Detection System

In the OLDS, SF_6 is released through the manifold and regulator station at 125 psig (8.8 kg/cm^2). From there, it travels through stainless steel tubing to the injection panel. Figure 6-9 provides an overview of the components mounted on the injection panel This panel indicates the delivery pressure, controls the SF_6 injection flow rate, and directs the flow of the gas to the designated circulating water train. Included in the panel are mechanically operated valves, pressure gauges, solenoid valves, and check valves. An electrical controller activates the pressure switch, mass flow meter, and solenoid valves. Flexible stainless steel hoses on the panel are used to connect the injection outlet to the tubing routed to available plant circulating cooling water system penetrations.

6.4.3.10 Communication

On-line condenser tube leak testing also requires communication and coordination. Communication between the analyzer operator and the gas application operator is vitally important to achieving success with this technique. For air in-leakage testing, the analyzer operator must know precisely when the gas is released so that leak discrimination can be accomplished. Which waterbox is being tested, what injection rate is targeted, and start and stop times must be known to both operators. There are several types of communication systems available. The most useful have sound-powered headphones, provide attenuation of ambient noise, and do not create RF interference, which disrupts analyzer and strip chart recorder operation. Commercially available models are durable and offer excellent sound quality.

Depending on the size of the station, 250–1000 feet (76–305 m) of two-conductor cable is all that is required in addition to the headsets.

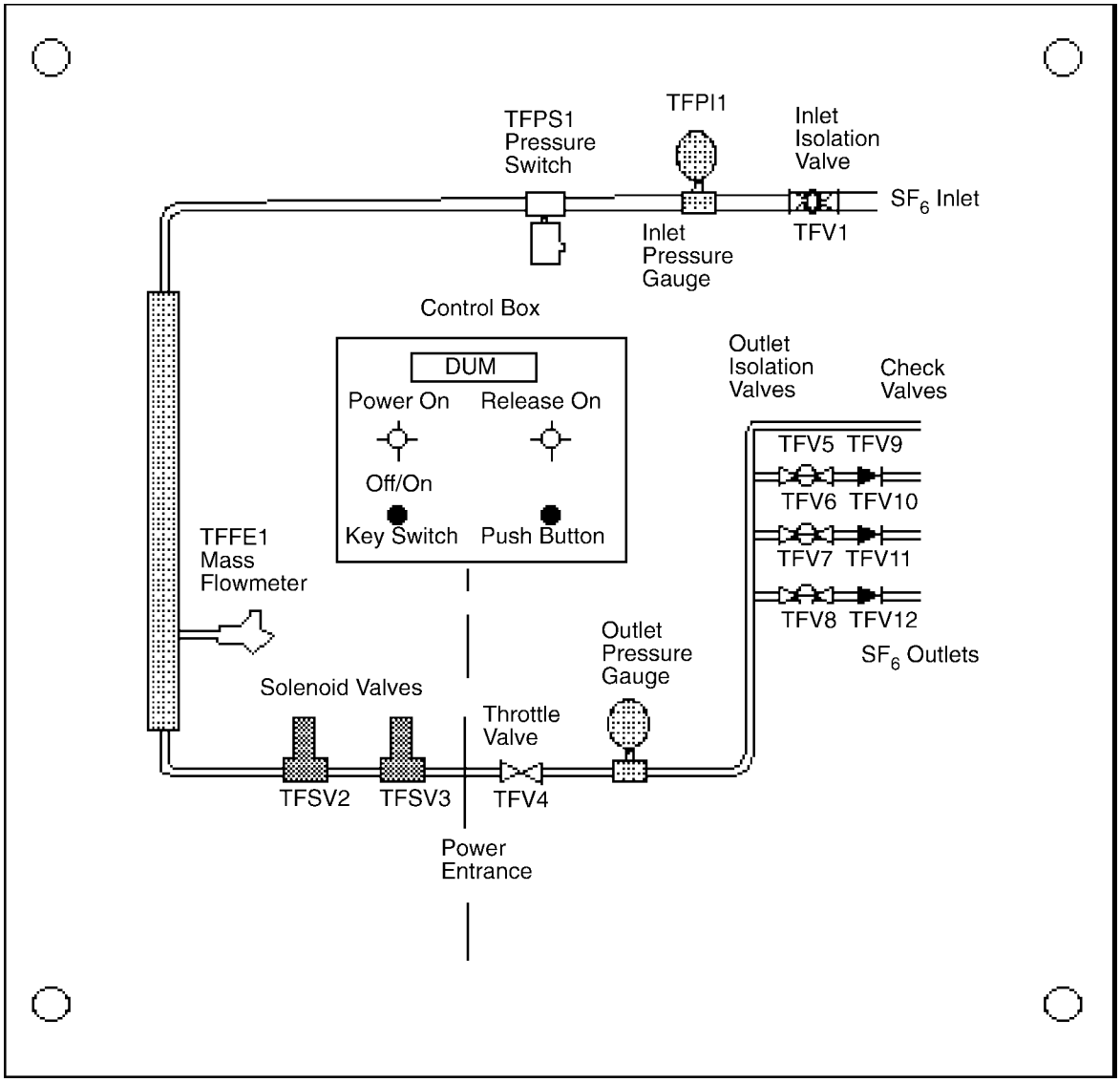

Figure 6-9
Permanently Installed Injection Panel

6.4.3.11 Strip Chart Recorder

A chart recorder is used to produce a hard copy of the analyzer response over time. The recorder is the work station of the operator who is positioned at the analyzer. All plant parameters, signals that tracer gas has been released, and analyzer responses are noted on the copy. The constant chart paper speed allows the operator to calculate response times and, thus, pinpoint leak location. It is important to use a single-channel chart recorder that is both compact and offers good performance. A typical response from an injection of a tracer gas as displayed on a strip chart recorder is shown in Figure 6-10.

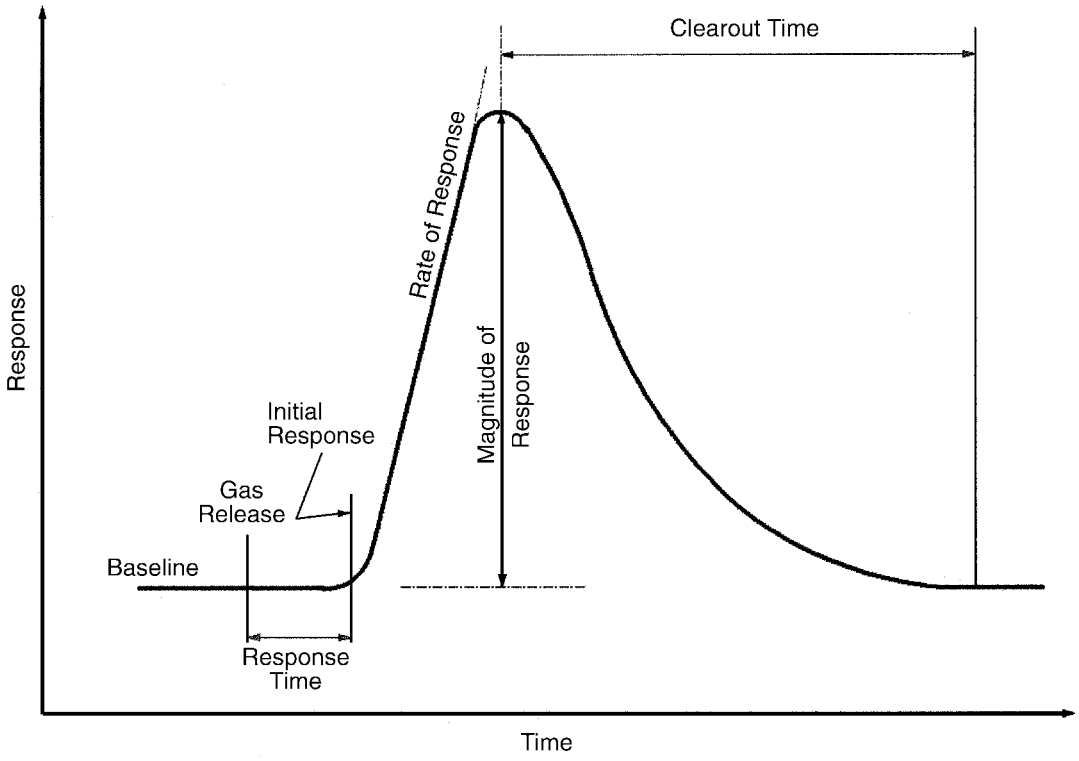

Figure 6-10
Chart Recording of a Typical Leak Response

6.4.3.12 Systems Integration

An evaluation of the condenser system configuration must be made prior to the installation of tracer gas leak detection equipment in the plant. This evaluation will ensure that:

- The location of the off-gas sampling point provides a representative sample of the off-gas while also maintaining a short response time.
- The detection equipment location optimizes both operator and equipment performance.
- The test-shot injection point location provides the necessary test verification.

Off-Gas Sample Location

A small portion of the off-gas flow is diverted to the detector during the leak test through a sampling probe inserted into the exhaust stream of the off-gas. An auxiliary air mover external to the analyzer (recommended pumping capacity ~1 SCFM) draws the sample into the probe and exhausts it to the test port of the detector. At that point, an internal sampling pump extracts a smaller portion of the sample and directs it to the detector for analysis. It should be noted that attempts to sample on the inlet side of air-removal equipment have generally met with failure because of the inability of small sampling pumps to overcome the high vacuum levels (26–29.5 inches Hg) (12–0 kPa) usually encountered.

When determining where to locate the sample point, two primary considerations are:

- **Response times are short.** The elapsed time between test gas release into a leak, and the time at which the gas is detected is referred to as the *response time*. It is important that the response time be as short as possible. An excellent response time is 30 seconds or less. A moderate time is 45 seconds.

  Response times greater than one minute have an adverse impact on testing, slowing the rate at which testing can be performed. When attempting to isolate a leak on a component in close proximity to other potential in-leakage paths, such as the turbine gland seal housing described in Section 11, long response times increase the time interval between consecutive tests.

  In order to attain the shortest possible response times, the sampling point is located as near the exhaust of the air-removal system as feasible. Typical air-removal (A/R) exhaust pipe diameters range from 4 inches (10.2 cm) up to 16 inches (40.6 cm). At low off-gas flow rates (the goal of these tests), the linear distance between the A/R exhaust point and the sampling point becomes extremely important. For example, on a unit with 10 SCFM air in-leakage that is equipped with 12-inch (30.5 cm) exhaust lines, every 1.5 feet (45.7 cm) of distance between the exhaust and sample points will add seven seconds to the response time.

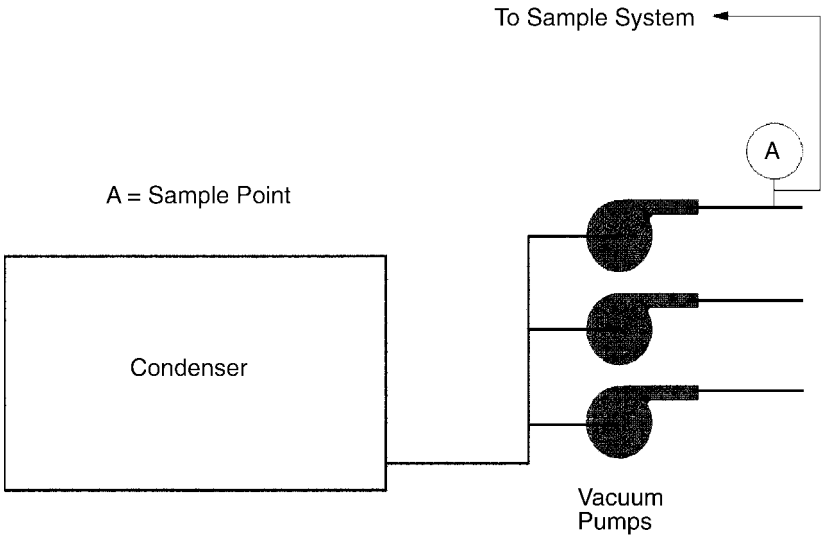

Figure 6-11
Multiple Pumps Arranged Sequentially on a Common Inlet Header

- **Only a representative fraction of the entire off-gas stream is sampled**. Most condenser air-removal systems use two or more air-removal pumps. The pumps can be installed so that each draws from its own header, or they may draw from a single header and be hooked in either series or parallel configurations. Large units with a multiple turbine and condenser arrangement may have an air-removal pump for each condenser. The sampling point (or points) must be located such that all off-gas streams are sampled. Figures 6-11 through 6-14 represent some of the configurations that may be encountered and the suggested locations of the sampling points.

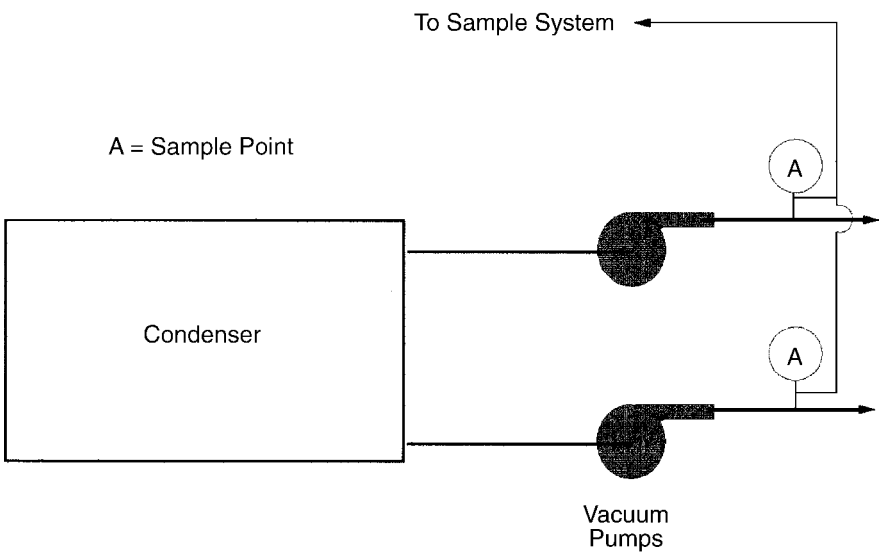

Figure 6-12
Multiple Pumps Each Connected to Its Own Condenser Air-Removal Area

Figure 6-11 shows three vacuum pump systems arranged in sequentially on a common header removing air and vapor from the condenser shell. In this case, the off-gas sample is taken from the discharge of only one vacuum pump. Figure 6-12 shows two vacuum pumps, each connected to its own air-removal area in the condenser, located within the same shell. In this case, the off-gas samples should be drawn from both pumps and these then connected together, before being passed to the analyzer. Figure 6-13 shows again three vacuum pumps, but they are arranged in parallel so vapor stratification could cause the composition of the off-gases to be different. In this case, samples are drawn from two of the pumps and these are then connected together before being passed to the analyzer. In Figure 6-14, there are again three pumps, but they are connected to common headers on both the inlet and discharge sides. In this case, the off-gas sample should be drawn from only one point

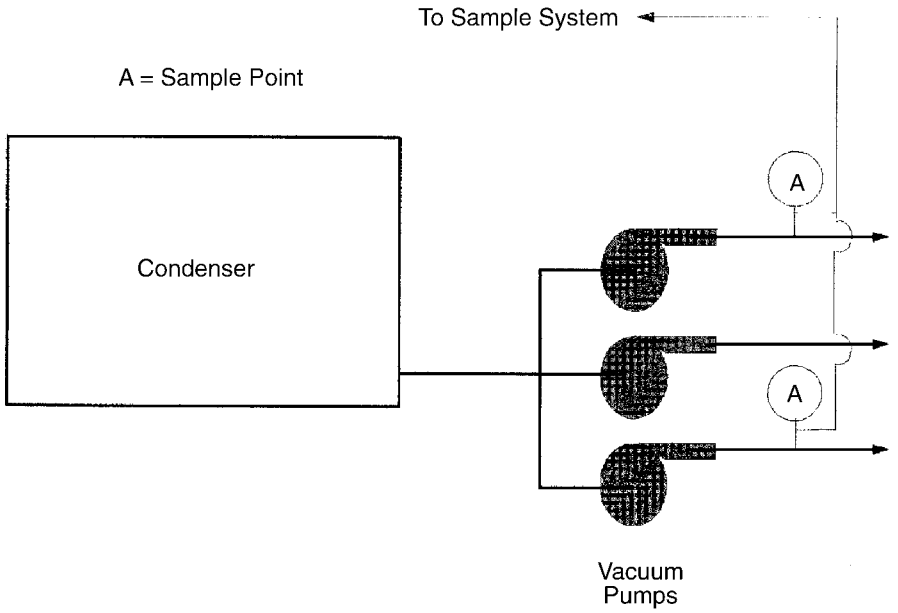

Figure 6-13
Multiple Pumps Symmetrically Connected to a Common Inlet Header

Sample Point Installation

Installation can be of a temporary or permanent nature. Often the sampling probe can be inserted into the off-gas stream through available openings in the rate measuring equipment such as flow meters, controlled orifice exhausts, etc. A probe should be used rather than simply connecting to an existing fitting in order to avoid problems often caused by a non-representative flow along the inner surfaces of the pipe. Some air-removal pumps have no exhaust headers, merely exhaust ports. In these cases, simply placing the probe in the exhaust stream and anchoring it in place will suffice. Other units are equipped with sealed off-gas headers routed to an exhaust point on the plant roof, offering no sample point penetration. In these cases, a valve must be tapped into the header near the pump exhaust port. This is the more permanent type of installation and requires inclusion of this valve in the testing procedure.

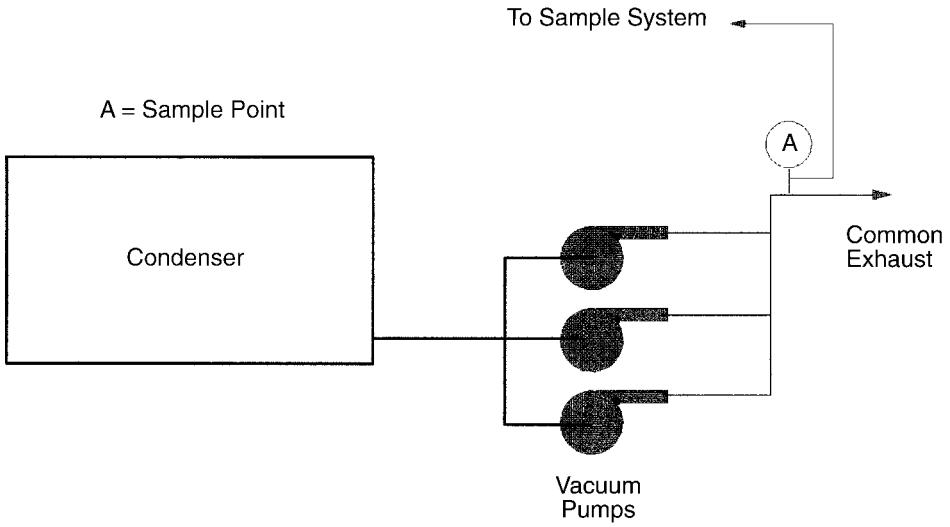

Figure 6-14
Multiple Pumps with Common Inlet and Discharge Headers

Determination of Test Equipment Location

The gaseous-tracer leak detection equipment is fairly rugged; high temperature or humidity levels are the main contributors to erratic operation. Even before these conditions become extreme enough to affect equipment reliability, there will probably be environmental stresses on the operator of the equipment. Testing may entail spending several hours at the detector and requires focused attention. The detector system location, therefore, should consider operator comfort and communications ease, as well as equipment survivability.

The length and size of the sample-line tubing and the sample flow rate both influence the testing response time and resolution. As discussed previously, these times should be short. Typical sample tubing sizes are 3/8 inch (9.5 mm) OD and the flow rates are 1 SCFM, which gives a transit time of 1 second in a 100-foot (30.5 m) length. This suggested convenient size and flow rate allows some flexibility in choosing the location. Thus, such tubing runs can be of considerable length (50 feet [15.3 m] or more) with only a small impact on response times. Long vertical runs should be avoided because they may develop water seals from moisture condensed out of the sample.

A general recommendation is that the equipment be located as near the air-removal equipment as the personnel and equipment considerations will allow.

6.5 Overview of On-Line Condenser Tube Leak Testing

Conventional techniques for detecting condenser tube leakage and subsequent isolation of the leakage to specific tubes depend on a variety of diagnostic monitoring systems and on plant personnel. In general, initial indications of leakage are noted by the chemistry department through their monitoring of station condensate, feedwater, or boiler water quality. Some stations have the capability to sample condenser hotwells. This allows for the quickest indication of

leakage but is not generally as sensitive as other sampling points. When chemistry levels degrade to operating limitations, the plant load is reduced, and a waterbox is isolated and drained for off-line inspection, generally without prior confirmation that it is the condenser section in which the problem lies. Generating stations with multiple waterboxes are faced with a "trial and error" method of isolation. Condenser sections must be tested one after the other until the waterbox with the leak is located.

On-line testing with SF_6 eliminates the need for maintenance personnel to take the waterbox out of service before being certain that the correct box has been selected. An SF_6 test can be performed to confirm chemistry indications or can be used on a routine basis to detect leakage before water chemistry degrades to the point of detection. The on-line technique requires little personnel support until a positive identification of the leaking waterbox has been made. At this point, the box is isolated, drained and tested to find the tube leaks. The time spent operating at reduced load and the amount of personnel time for waterbox setup is reduced to only the off-line inspection time required to locate the specific leaking tubes.

Determination of the number and location of SF_6 injection points depends on the configuration of individual station systems. More specifically, it depends on both the circulating cooling water system and the air-removal system. The objective is to position the locations where there is a high assurance that mixing will be sufficient to minimize the number of locations required.

In general, the injection point should be located as close upstream of the inlet condenser tubesheet as possible. Although locating the injection point the equivalent of several pipe diameters upstream is most desirable, penetrations of the actual waterbox wall have been found adequate. The favorable success rate of points near the tubesheet supports the supposition that even though a gas-phase tracer is injected into the system close to the leaks, turbulence within the waterbox is great enough to cause adequate dispersion of the gas. Tube leaks have been detected even though located in the lower corner on the opposite side of the tubesheet from where the tracer was injected, indicating that the gas is not migrating to the top of the waterbox and is missing the lower portion of the tubesheet. Typical injection locations include penetrations for pressure gauges and transducers, temperature probes, chemical injection ports, vents, and waterbox inlet pressure differential lines.

Another good location not necessarily in the vicinity of the waterbox is the circulating water pump. This point is desirable because of the relatively long transport distance for mixing. It is not an acceptable location, however, if the line between the pump and the inlet waterbox is vented either to the outside atmosphere or inside the turbine building. A vent in the system is detrimental for two reasons. First, SF_6 will escape from the circulating system, reducing the tracer concentration in the cooling water and, hence, the leak-rate sensitivity. The second and possibly more important factor is that escaping SF_6 within the turbine building can produce background contamination that will confuse and delay testing.

The best injection vehicle, if available, is penetration into a condenser-tube cleaning system such as a non-leaking Amertap system. The Amertap offers as many as four counter-flow injection nozzles in each circulating water inlet feeder. SF_6 can be discharged into the ball collector tank from which it is pumped by the system through the nozzles and into the circulating water system.

Penetration locations must next be determined so that a condenser-tube leak location can be isolated to a single condenser section. Some plant configurations require as many as six injection points to complete the test. Figure 6-15 shows a common plant design of a circulating cooling-water system with one inlet feeder for each condenser section. This once-through parallel arrangement requires an injection point at each inlet waterbox regardless of the configuration of the air-removal system. Any of the penetration types discussed previously will suffice.

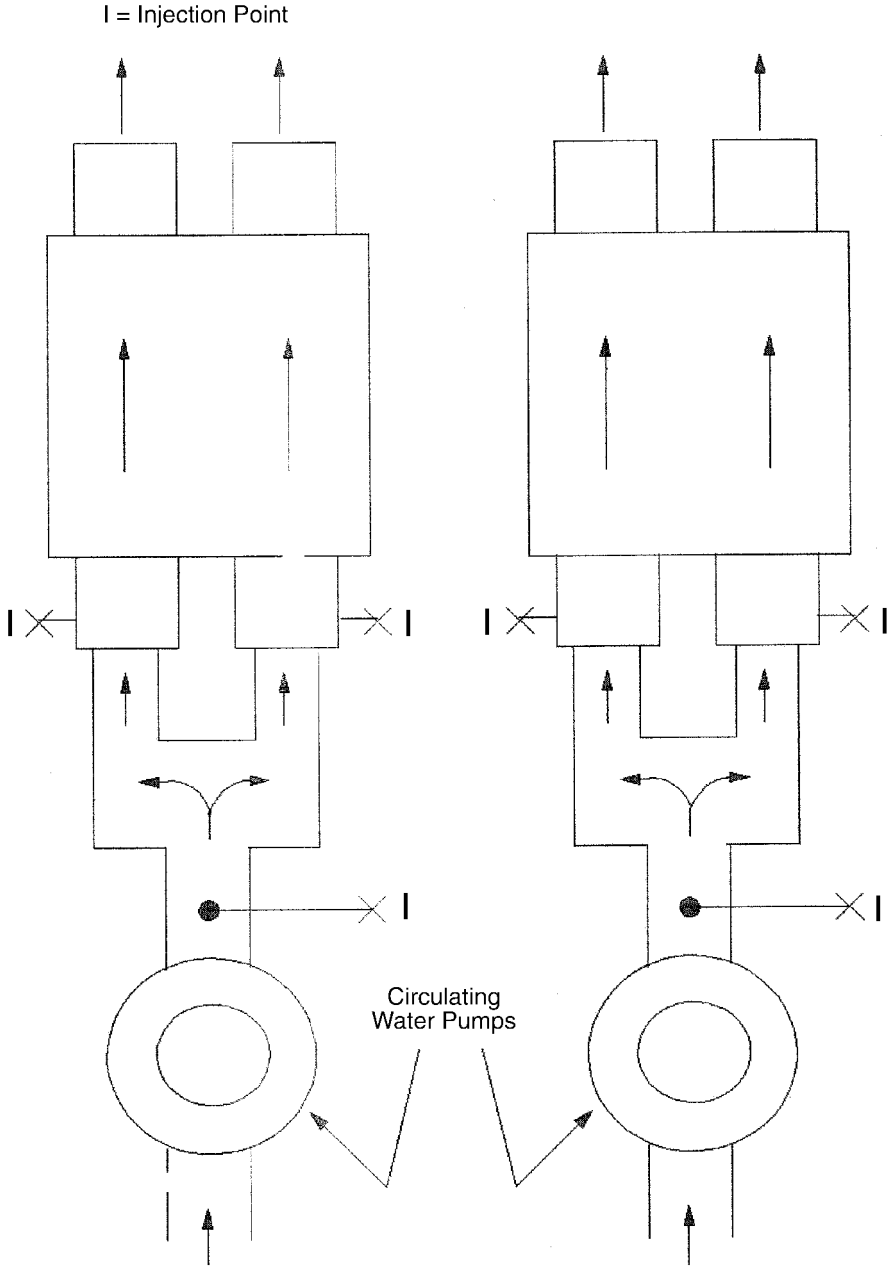

Figure 6-15
Cooling Water System for a Condenser Having a Separate Inlet Feeder for Each Section

Figure 6-16 shows another circulating system type with a series-flow design where one inlet feeder passes through more than one condenser section. If the air-removal system design allows an off-gas sample from each individual condenser shell, only one injection point for each circulating water train is necessary. Meanwhile, some stations with a series circulating system have a common air-removal header or cascading air-removal system that does not enable individual condensers to be sampled. In these cases, an injection point upstream of each condenser section on the train is required as shown in Figure 6-17.

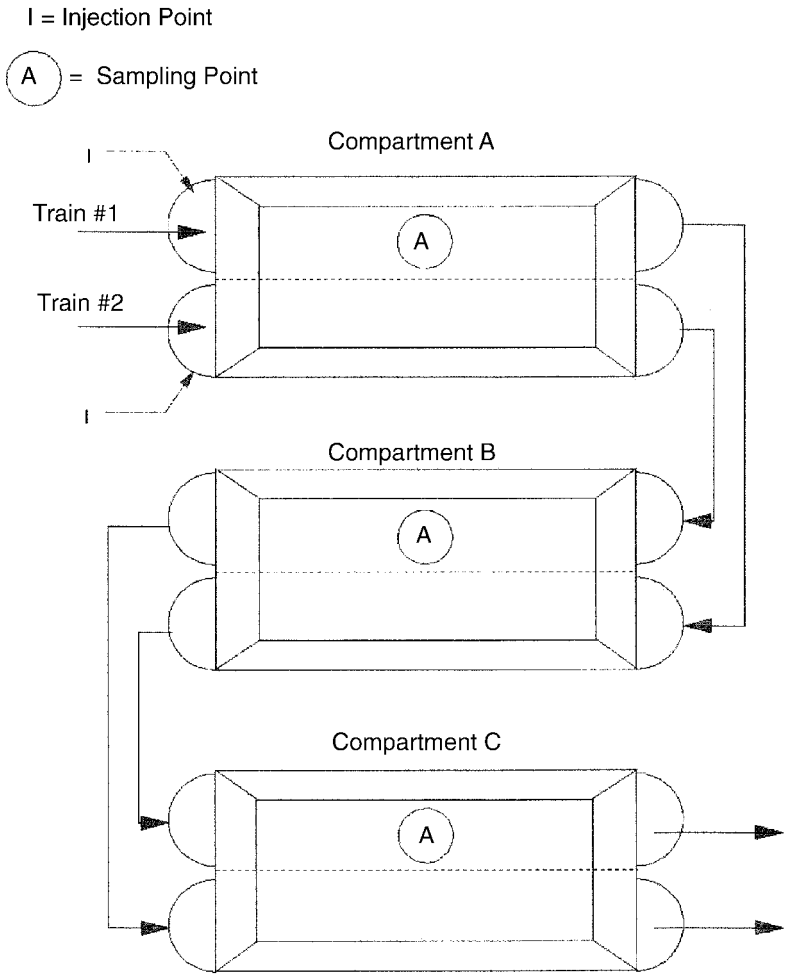

Figure 6-16
Condenser Cooling Water System with Series Configuration and Discrete Condenser Shell Air-Removal

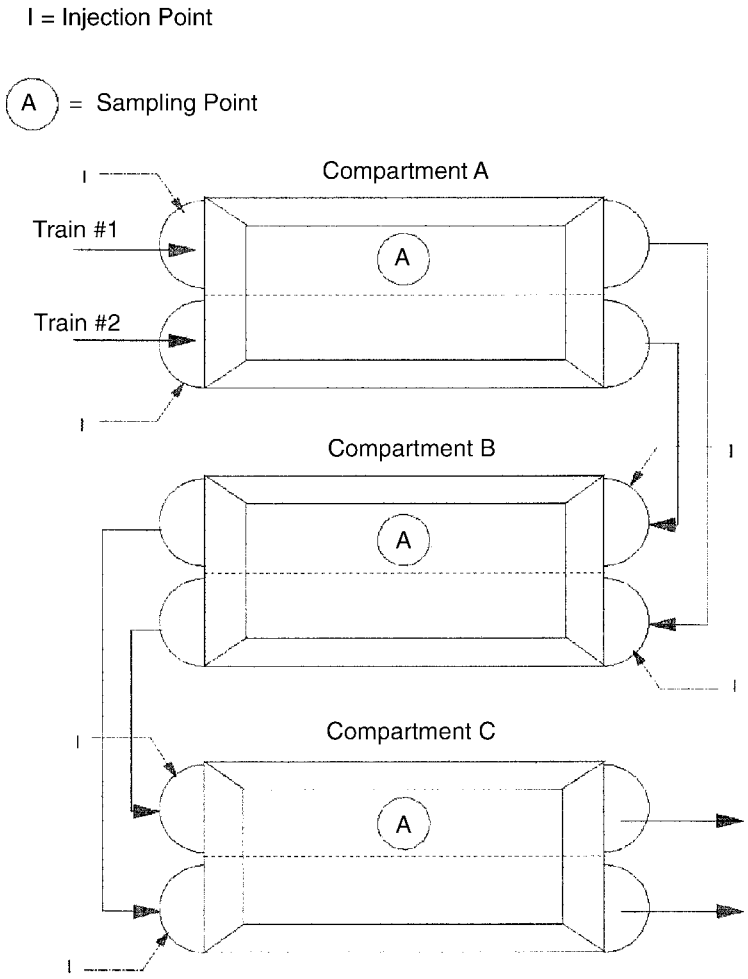

Figure 6-17
Condenser Cooling Water System with Series Configuration and Nondiscrete Condenser Shell Air-Removal

Before attachment of the injection system quick-disconnect fittings to the selected penetrations, it should be confirmed that the root valve operates properly and that the ports are not fouled. Circulating cooling water systems have a tendency to deposit sludge, rust, and marine life into the recesses of the ports. The penetrations should be bored with a rod or flushed out using high-pressure gas injection. Mechanical boring generally obtains the best results. If the selected port does not have an isolation root valve, it is advisable to select a port that does. If one cannot be found, it is still possible to make the connection while the system is in service. Most circulating cooling water systems operate at low pressures, sometimes only slightly greater than the head created by the column of water above the penetration. Under these circumstances, the cleaning of the bore and the installation of the quick-disconnect fitting can be made without great difficulty.

There are several plant design features that may adversely impact the on-line waterbox inspection. Systems or components that can release the SF_6 tracer into the building create problems. Any SF_6 that escapes the cooling water system will travel through the building and be drawn into the condenser through air in-leakage points raising background levels, possibly to the point of analyzer saturation. Confusion and testing delays will occur.

Injections made through a header or manifold need careful inspection to ensure that there is no leakage. Joints and valve packings present the most frequent problems. Any waterbox vents or drains that may be open should be secured. It is also important to confirm cooling water flow direction, especially in plants that can operate the system in a backflush mode. Some plants operate waterbox vacuum priming during start-up to ensure tubesheet coverage by the cooling water, while others are run continuously. Both of these pumping systems typically discharge into close proximity of the condenser and need to be valved closed. Circulating cooling water lines that are joined to form a common discharge canal or weir often have a vent or open basin within the building. This type of plant design can give the most serious problems because of the large volume of gas released inside the building. In comparison, injections made into a separate system that empties into the circulating system, such as the Amertap condenser cleaning unit, cannot leak at the pump seals or collector tanks.

The examples given do not include all the possible systems that create testing difficulties. An operator must walk down the specific unit to determine what considerations and modifications are required before testing can begin.

6.5.1 Station Leak Rate Detectability

Determination of the station chemistry sensitivity to condenser tube leakage rate is helpful in assessing the SF_6 injection rate to be used. Minimum tube leakage rate detected by chemistry is a function of cooling water quality and chemical sensitivity. Regardless of the type of diagnostic monitoring equipment available, sensitivity to tube leakage increases as cooling water quality diminishes. Facilities that use brackish water for cooling or utilize cooling towers have more sensitive low level leakage responses than those using river or lake water. Some of the more common diagnostic measurements detect chlorides, sodium, and other cation conductivity. The following outlines a method for determining condenser tube leak rate sensitivity by chemistry.

Chemistry Leak Rate Sensitivity (Using Sodium)

[Nacw] = Circulating cooling water sodium concentration = 280 ppm
[Namd] = Chemistry sensitivity for sodium in feedwater = 1 ppb
(FRfw) = Flow rate of feedwater = 20,000 gpm (75,708 lpm)
(LRct) = Minimum detectable condenser tube leakage rate

Then

$$LRct = \{(FRfw)\ [Namd]\} / [Nacw] \qquad \textbf{Eq. 6-2}$$

Substituting in Equation 6.2:

$$LRct = \{(20{,}000)\ (1 * 10^{-9})\} / (2.8*10^{-4}) = 0.07 \text{ gpm } (0.27 \text{ lpm})$$

= 100 gallons (379 l) per day

Once chemical detection sensitivity of condenser-tube leakage has been determined, an estimate for on-line waterbox testing sensitivity can be calculated. If feedwater chemistry is indicating a

problem, testing is useful for determining which condenser section is leaking. Alternatively, testing can be used as a predictive tool to augment plant chemistry capabilities. If leakage is detected early enough, repairs can be planned for an outage instead of a power reduction being forced unexpectedly. SF_6 injection rates should be gauged by a combination of plant operating parameters including current chemistry indications, circulating water flow rate, and off-gas flow rate. The following equations will estimate the required SF_6 injection rate required for a specific sensitivity at given operating parameters.

6.5.2 Derivation of Tracer Gas Injection Rate

Let (Cog) = Minimum detectable SF_6 concentration in the condenser off-gas system (0.2 ppb)

(LRcw) = The minimum detectable leakage rate of circulating water entering the condenser in a single waterbox (gallon per day). Approximately 1.0 gallon (3.8 l) per day

Q = Condenser off-gas rate (SCFM)
K = Worst case tracer gas efficiency

(FRcw) = Circulating cooling water flow rate (gpm [lpm])
(Ccw) = Concentration of SF_6 in the circulating water (SF_6 / ft^3 [SF_6 / m^3] circulating water)

(SF_{6fr}) = SF_6 flow rate (SCFM)

Then

$$Ccw = [(Cog)\ (Q)] / [(LRcw)\ (K)] \qquad \textbf{Eq. 6-3}$$

And

$$(SF_{6fr}) = [(Ccw)\ (FRcw)] / 7.48 \qquad \textbf{Eq. 6-4}$$

Assuming that 7.48 gallons of water occupy 1 cubic foot (28,317 cubic centimeters)
Q = 10 SCFM
K = 0.1
(FRcw) = 100,000 gpm (378,541 lpm)

Then substituting in Equation 6-3 gives:

$Ccw = [(2.0*10^{-10})\ (10)] / [(1.0)\ (1/1440)\ (1/7.48)\ (0.1)]$

$= 0.0002\ ft^3\ SF_6 / ft^3\ (SF_6 / m^3)$ circ. water

and in Equation 6-4:

$(SF_{6fr}) = (0.0002)\ (100{,}000) /7.48$

= 2.67 SCFM

Note that worst case tracer gas efficiency (K) is the factor used to account for any phase separation and migration that might occur after the tracer gas has entered the individual tube. If the leak is located near the inlet of the tube, then distribution should be good. After the flow becomes laminar further down the tube, the gas can begin to rise to the top of the tube. This coefficient accounts for the reduced concentration possible at the bottom of the tube. Based on tests, the concentration will not decrease to less than 10% of the homogeneously mixed concentration. In all other regions of the tube, the value will be greater than 10%.

6.6 General Considerations

6.6.1 Selection of Tracer Gas

6.6.1.1 Size of Leak

If the chemistry shows a leak in excess of 50 gallons (189 liters) per day, either SF_6 or helium can be used. If leakage is less than 50 gallons (189 liters) per day, SF_6 should be used as the standard procedure.

6.6.1.2 Unit Turbine Power

If the unit is running at greater than 20% turbine power, then either tracer gas may be used. If the unit has no turbine power and the leak is so bad that the unit cannot be brought up to any turbine power level, standard procedure would dictate the use of helium.

6.6.2 Good Practice for Condenser Leak Detection Procedures

Injecting tracer gas as the waterbox is being drained to determine the approximate location of the leak in the box is optional. However, once the unit is powered down and the waterbox is drained, it is incumbent upon the technicians to systematically check the entire tubesheet from top to bottom, since one large leak could be masking a smaller leak in a different location within the box. Awareness of the actual location of the leak, (that is, closer to outlet end, a leaking plug, a waterbox seam) can also avoid a predisposition as to where the leak location actually is. Technicians should be discouraged from prejudging situations because this can give rise to false data and result in delays in locating the leak.

The effective location of leaks requires a very discrete application of the tracer gas, and it is important to keep track of every shot of tracer gas during the whole condenser tube leakage inspection process; otherwise, the isolation of that one leaking tube can become almost impossible.

Experience has shown that the use of a plenum placed directly on the tubesheet is very helpful. Typically a 1' x 2' x 1" (30.5 x 61 x 2.5 cm) deep plenum is used first. If leakage is indicated, go

to a 1' x 1' x 1" (30.5 x 30.5 x 2.5 cm) plenum and then to 4" x 4" x 1" (10.2 x 10.2 x 2.5 cm) plenum and subsequently to a “single tube shooter.” The use of the plenum method, illustrated in Figure 6-18, eliminates the possibility of missing a tube or that the tracer gas does not travel across the whole surface of the tubesheet. Finally, a wand type mechanism should be used to spray the waterbox seams after the tubesheet inspection has been accomplished.

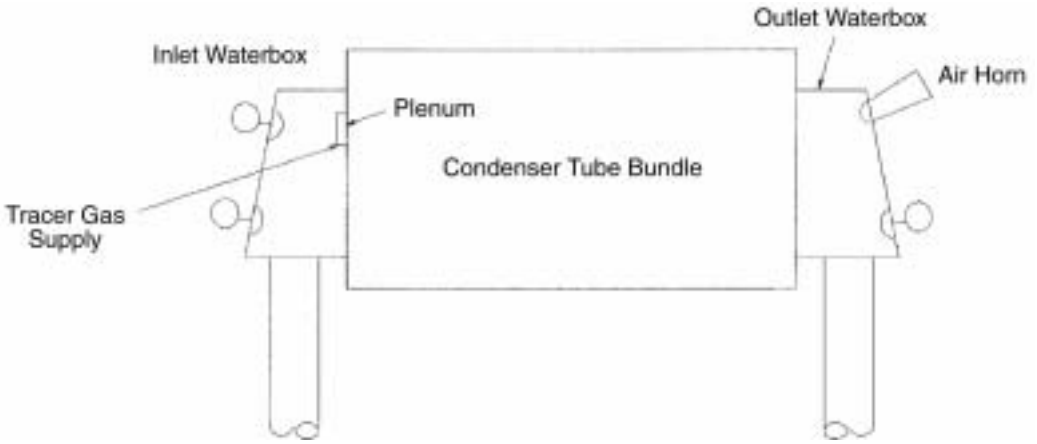

Figure 6-18
General Setup for Tube Water Leak Test

When inspecting a waterbox for tube leakage, it is important to have the strip chart recorder operating and to know the sample response time. The technician should typically begin the inspection of a waterbox in the upper-left corner of the tubesheet working toward the right side of the box and then dropping down a row working right to left. This alternating direction of left to right and right to left should continue for the entire inspection. Normally, each shot of tracer gas lasts for 10 seconds. After waiting for a further two seconds, move the plenum for the next shot. Unless the technician monitoring the detector sees an indication of leakage, the man in the waterbox will continue to shoot without stopping.

To determine if the leak is closer to the outlet end, simply take a first 10-second shot, wait before shooting again and monitor the strip chart recorder. If the recorded response time plus 15 seconds expires with no indication, repeat the same step until the leakage indication is duplicated. If the response time is right on target, obviously an area of leakage has been found, and the descending size plenums must be utilized to isolate the leaking tube.

There are instances where a leak is indicated with the very first shot as well as on all subsequent shots. The first thing to do is to check the response time, whether it is it too long or right on time. If the response time is too long, it may be because the leak is closer to the outlet end.

It is common practice for 99.9% of waterbox inspections to begin on the inlet side waterbox; the tracer gas is sprayed toward the outlet end.

Another possibility is that the gas being evacuated from the outlet waterbox is being directed by the blowers toward another air in-leak. To eliminate this possibility, simply spray the tracer gas into the suction side of the blower and monitor the strip chart recorder for an indication. If an indication appears, redirect the blower or add ducting to direct the exhaust outside.

When working with pure SF_6 for on-line circulating water injection, make sure that all fittings are tight and that connections to the regulator and to the circulating water line are not leaking. Most important, when connecting the hose to the injection point, quick disconnects must be used to ensure as little leakage as possible. The two most common causes of an increase in background can be directly attributed to carelessness when disconnecting the hose from the regulator and/or pressurizing the injection hose prior to connection to the circulating water line injection point. Both are contrary to written procedure.

In summary, SF_6 is clearly very sensitive to work with but, just as with any other work performed in either a fossil or nuclear generating station, the proper procedures must be followed if the work is to be successful.

6.7 References

1. M. Padmanabhan, *Assessment of Flow Characteristics Within a Single-Pass Condenser Waterbox Using a Hydraulic Model*. Salem Nuclear Power Station, Alden Research Laboratory Report No. 65-79, April 1979.

2. *Failure Cause Analysis B Condenser and Associated Systems*. EPRI, Palo Alto, CA: June 1982. Report CS-2378.

3. Richard E. Putman and James Kocher, "The Better Use of Eddy Current Data to Improve Heat Exchanger Maintenance Management," EPRI Balance of Plant Heat Exchanger Workshop, Myrtle Beach, SC (June 6–8, 1994).

4. E. F. Conley, "Corrosion Monitoring of Condenser Systems," EPRI Symposium on State-of-the-Art Condenser Technology, Orlando, FL (June 1983).

5. P.G. Simmonds, A.J. Lovelock and J.E. Lovelock, "Continuous and Ultrasensitive Apparatus for the Measurement of Air-borne Tracer Substances," *Journal of Chromatography*, 126, pp. 3–9, 1976.

6. John Tsou, private communication, February 13, 1996.

7. *International Physical Tables*, Vol. A 11, p. 338.

8. *Location of Condenser Leaks at Steam Power Plants.* EPRI, Palo Alto, CA. Report No. NP-912.

9. *Assessment of Condenser Leakage Problems.* EPRI, Palo Alto, CA: August 1980. Report NP-1467.

10. *Condenser In-leakage Monitoring System*. EPRI, Palo Alto, CA: September 1982. Report NP-257.

11. Air In-leakage Limits for Nuclear Turbines, Westinghouse Turbine Division Operation and Maintenance Memo No. 029, March 12, 1982.

12. United States Nuclear Regulatory Commission, Rules and Regulations, Title 10, Chapter 1, Code of Federal Regulations – Energy, Part 31.

7
METHODS FOR CORRECTING WATER IN-LEAKAGE

Section 6 described available methods for locating the source of water in-leakage; some of these methods can be used on-line while the condenser is still under load. Some of the possible remedies available to correct these in-leakage problems include:

- Tube plugs of various types
- Tube inserts or “shields”
- Tube-end coating
- Tube linings
- Full-length tube coating
- Rerolling the tube-to-tubesheet joints
- Coating of tubesheets
- Retubing
- Miscellaneous

Having found the source and nature of the leak, it may be prudent to perform a failure analysis. It is not enough to merely correct the immediate problem. Steps should be taken to determine the extent of the damage to other parts of the tube bundle by, for example, eddy current testing of a selected set of tubes.

How to prevent or delay the occurrence of similar in-leakage problems in the future should be a strategic concern. If corrosion was due to deposits not being removed soon enough, perhaps a more frequent tube cleaning program should be instituted. If the corrosion was caused by the chemical composition of the cooling water source, a chemical treatment program may need modifying. Perhaps the tube material is unsuitable for the available source of water; or possibly the corrosion was due to galvanic action between incompatible metals. All these failure modes require their own appropriate policy response.

If the water in-leakage were due to the erosion/corrosion of tube inlet ends, this can often be circumvented by placing plastic inserts in the inlet ends or, alternatively, thin-walled metal inserts or “shields.” Damage from tube vibration can also be reduced by staking the tube bundles appropriately.

All of these can be considered as strategic approaches designed to extend the longevity of the condenser. However, severe tube damage can make retubing the condenser a necessity; this is always a major project that requires careful engineering and a well-planned execution.

Meanwhile, given the increasingly competitive utility industry environment, the more immediate task is usually to rectify the particular problem that has been isolated in order to bring the unit back on line as soon as possible. The following sections discuss some of the available remedies and when and where they should be applied.

7.1 Tube Plugging

If it has been established that the in-leakage has been caused by a tube failure, the unit can be rapidly returned to service by plugging the leaking tube. Condenser design is such that there is typically excess surface area available in the form of extra tubes to allow as many as 10% of the tubes to be plugged without reducing the effective heat transfer capacity of the unit.

There are many different types of condenser tube plugs to choose from. Keep the following considerations in mind when selecting plugs:

- The plug should be permanent and leak tight for the life of the condenser. At the same time, the plug should easily removable for retubing.
- The plug installation process should be controllable and the action of installing the plug should not damage the tube, tubesheet ligaments, tube joints, or the epoxy coatings applied to the tubesheet and/or tube.
- The plug itself should be constructed of materials that are rated for an infinite life of continuous duty in the condenser environment. The plug materials should resist any corrosion and aging effects that might cause leakage.
- The ideal condenser plug should not require periodic retightening and inspection to verify that they are leak tight.
- The plug should resist pressure from either direction.

In situations where previously installed plugs are missing, are leaking, or have caused collateral damage to the tube and tubesheet, the actual plug cost should not be a major factor. The expense associated with controlling persistent water in-leakage as a result of tube and plug leaks may be many times the cost of even the most expensive plug.

Finally, when plugging tubes, be sure that tube plugs are placed at both ends of the same tube.

7.2 Tube Inserts

Using tube inserts to solve the problem of leaking tubes requires advance planning, but this is another way of bringing back into service some tubes that are presently plugged. A common practice is to use flared or flanged plastic inserts or tube protectors designed to alleviate the inlet end erosion. These are either pressed into the tube end or cemented in with an adhesive. However, while they may eliminate the original inlet end erosion, they can also cause end-step erosion further along the tube and thus introduce a different kind of problem. These plastic inserts also have reduced inside diameters, which can make any future mechanical tube cleaning more difficult.

As an alternative, Tallman [1] advocated the use of metallic thin-walled inserts or "shields," as providing a more durable solution. First introduced in 1976, these shields are made with a chamfered outlet end, which greatly reduces the chance of end-step erosion. They are also hydraulically expanded into the host tube, thus structurally reinforcing it. The shields are then flared so that they conform to the tubesheet profile. Clearly, there must be a careful selection of the insert material based on the material from which the original tubes were manufactured, although a different insert material may sometimes be selected in order to combat a specific failure mechanism. These metallic shields restore tube-to-tubesheet joint strength, extend bundle life, have no negative effect on heat transfer, and reduce the tube opening by only a fraction of that associated with plastic tube inserts.

7.3 Tube-End Coatings

An alternative approach to tube inserts for tube-end erosion/corrosion problems is an all-solid, nonsolvent-emitting, tube-end epoxy coating that can halt the erosion process. Such coatings have been used in service and cooling water system applications for over 15 years and have also been successfully used with both freshwater and seawater environments. The coatings are precisely applied in three coats, each having a thickness of 3 mils (0.08 mm), for a total coating thickness of 9 mils (0.23 mm). The coatings are applied to the required depth into the tube-end, the depth usually being between 2 and 12 inches (5.1 and 30.5 cm). The metallurgy of the tube to be coated is not significant because the coating is compatible with all tube materials. Each coat in the tube conforms to the tube wall and extends beyond the previous coat, so that a feathered termination surface is achieved. This eliminates the possibility of step erosion occurring in the area where the coating terminates.

The work is usually performed during an outage and the application of the coating is completed with the waterbox in place. It is highly recommended that throughout the application process, all environmental control equipment, such as dehumidification and dust collection systems, are placed in full operation.

The tube-end coating does not significantly reduce the internal diameter of the tube so that NDE procedures are not impaired. The tube-end coating is also compatible with all on-line and most off-line tube cleaning methods, including metal scrapers; although, with the latter, plastic nozzles must be used on the cleaning guns. Another off-line tube cleaning method involves the use of high pressure water. Unfortunately, using water at a high pressure is the preferred method for removing existing coatings, so that great care must be taken if using it as the tube cleaning method, to ensure that coatings are not accidentally removed.

It has been the almost universal experience that, when tube-end coatings are selected as the method for repairing tubes, such coatings are usually applied in conjunction with the installation of a tubesheet coating/cladding system.

7.4 Full-Length Tube Liners

Using techniques similar to those developed for use with thin-walled metallic inserts, tube liners can also be inserted to cover the whole tube length. After cleaning the insides of the original

tubes, the liner is installed; a bleed chuck id placed on one end and a pumping chuck on the other to seal the tube. The liner is then filled with water, the air is bled out, and a hydroexpansion pump is used to expand the liner to achieve an almost completely metal-to-metal fit. After remaining pressurized for a short time, the pressure is released and the water is drained out. Subsequently, the ends of the expanded liner are cut off and milled flush to the tubesheet and are then roller-expanded into the tubesheet to a predetermined wall-reduction specification. In this way, previously plugged tubes can be restored to active duty.

However, while the tube end inserts have no adverse effect on heat transfer, it should be noted that full-length liners do have a greater impact. Since the thickness of the liner is small, any degradation in U-coefficient is almost entirely due to the effectiveness with which metal-to-metal contact was achieved between liner and tube during the expansion process. Because of this uncertainty, it is recommended that heat transfer studies be conducted on several samples of the tube to be lined, in order that the effect on heat transfer can be established prior to the relining process being implemented in the field.

7.5 Full-Length Tube Coatings

The advent of full-length tube coatings occurred in both Europe and Japan in the mid-1980s. It was introduced to protect tubing material from ID pitting, from full-length tube-wall thinning, and/or to prevent copper ions from being leached from condenser tubing directly into the circulating water. The coating material is applied with an average thickness of 2–4 mils (0.05–0.10 mm). However, the actual coating thickness selected has to be balanced between solving a particular problem and retaining sufficient tube heat transfer capability.

Proper tube surface preparation may include washing with high-pressure water, mechanical cleaning, and abrasive blasting, and the coating material is then applied using automated spraying equipment. Again, it is highly recommended that throughout the application process, all environmental control equipment, such as dehumidification and dust collection systems, be placed in full operation.

In the early 1990s, a U.S. utility decided to coat tubes to prevent copper ion release from condenser tubes and the subsequent discharge of the ions with the circulating water into a coastal salt water inlet, thus violating an EPA upper limit on allowable copper concentration in discharges into pristine water. Although this problem was solved successfully by applying a full-length tube coating, a small reduction in the tube heat transfer coefficient also resulted.

If the epoxy coating of tube inner surfaces is to be the means for eliminating through-wall penetrations, some other considerations must be kept in mind. Since gravity causes the coating to be thicker toward the bottom of the tube, tube penetrations located toward the top of the tube circumference may not become sealed adequately. Surface preparation and quality assurance along the whole length of the tube is also a key factor in the success of the application and the difficulties are obvious, becoming greater the longer the tube. Consequently, the epoxy coating of the internal surfaces of tubes should be approached with caution if the purpose is to eliminate leaks through tube wall penetrations.

7.6 Rerolling the Tube-to-Tubesheet Joint

It is sometimes the joint between the tube and the tubesheet leaks. When this occurs, one remedy is to mechanically expand the tube again, using a specially designed mandrel driven by an electric motor. These mandrels are provided with between three and five rollers; the thickness of the tube to be expanded determines which mandrel is selected. Care must be taken to ensure that the allowable wall reduction is not exceeded.

Rerolling may solve the joint leak problem; however, it should be noted that, if the leak were caused by galvanic corrosion between tube and tubesheet, the problem might return due to the continuing degradation of the tubesheet from galvanic action. Also the rerolling of tubes may place stresses on adjacent tubes and result in their suffering tube-to-tubesheet joint leaks. Further, when rerolling tubes into tube sheets that have been made from a copper-bearing alloy, such as Muntz metal, naval brass, silicon bronze, etc., great care must be taken to avoid damaging the boreholes in the tubesheet.

7.7 Coating of Tubesheets

Tubesheet coating has been used by the power industry for at least the past 30 years. They started as thin-film systems (< 30 mils or 0.76 mm) and evolved into tubesheet cladding systems. According to Anderson et al. [2], protective coatings have been used as a means of eliminating water in-leakage when caused by tubesheet corrosion. Some of the reported results include:

- Restoration of the tube-to-tubesheet joint strength, making them “leakfree”
- Halting the corrosion process
- Resistant to erosion/corrosion at the tubesheet surface
- Inert to chemical cleaning and water treatment programs

A cladding system is 200 mils (5.08 mm) or more of an all-solid, nonsolvent-emitting epoxy coating applied to a tubesheet by a specialty contractor in the form of multiple coats. Abrasive blasting of the tubesheet is required, and the tubes must be protected from the blast by the insertion of blast plugs. Similarly, when subsequently applying the coating to tubesheets, coating plugs need to be inserted into the tubes to protect them. Otherwise, NDE procedures as well as tube cleaning can be hampered by material mistakenly left in the tubes. Again, it is highly recommended that throughout the cladding process, all environmental control equipment, such as dehumidification and dust collection systems, be placed in full operation.

Manufacturers recommend that epoxy coatings neither be subjected to high temperatures (> 170°F or 76.6°C) nor allowed to freeze. If tubes mounted in tubesheets that have been treated in this way subsequently leak, they should not be plugged with tapered brass or fiber plugs. Expandable plugs are preferred because they do not put pressure on the coating. Plugs should never be hammered into tubes in tubesheets after they have been coated.

When cleaning the surface of the tubesheet with high pressure water, pressures in excess of 3000 psi (20,684 kPa) should never be used, nor should high-pressure water be used to clean tubes that have been coated internally. Finally, tube-cleaning nozzles should never be made from brass or

some other metal but only from a soft plastic material in order to prevent physical damage to the epoxy coating itself.

7.8 Condenser Retubing

Condenser tube leaks are the major source of water in-leakage and, in many cases, are increasingly the cause for reduced unit generating capability. As previously mentioned, tube plugging is the preferred method for eliminating tube leaks until the percentage of tubes plugged has significantly impaired heat transfer capacity. At this point, further tube plugging reduces the condenser performance and capability of the unit for full power production. When this occurs, utilities typically consider retubing the condenser to restore performance, while also extending the operating life expectancy of the unit.

Experience with new materials, new tools, and new techniques has significantly reduced water in-leakage problems due to tube leaks and has improved condenser reliability. This has allowed "state of the art" condenser retubing methods to advance appreciably over the past 10 to 15 years. Thus, in addition to the standard, one-for-one, tube replacement technique, modular tube bundle replacements have been very successful using shop-fabricated modules. Consequently, units considering condenser retubing are not faced with a simple decision to replace the existing tubes with new tubes of the same material and construction. In most cases, operating experience with the old condenser has also highlighted performance problems; the majority of which center around water chemistry (both cooling water and condensate), tube fouling, and tube wall thinning issues. Clearly, the design of the tube bundle replacements should take this experience into account. Finally, because condenser retubing represents a major capital investment, economic factors also weigh heavily in most retubing decisions.

The industry trend of late has been toward replacing copper-bearing alloys with high alloy, pit-resistant steels such as Allegheny-Ludlum 6XN and Sea Cure in addition to titanium. These materials are significantly lighter in weight and higher in yield strength, but they have lower thermal conductivities than the copper-bearing alloys. These differences can significantly affect the performance characteristics of the condenser. Typically, thinner walled tubes of the same outside diameter are selected from these alloys in order to reduce the tube wall thermal resistance and compensate for the loss in thermal conductivity. This tradeoff results in a larger tube side flow area but lower flow velocity; the latter increases the fouling potential for the condenser tubes and may require the addition of an online tube cleaning system. The lighter overall weight of the tube bundles also results in a change in the condenser support loads and may increase the condenser hold-down requirements.

Another consequence of retubing with one of these materials is the likely need for additional tube support plates or tube staking to reduce the tendency for tubes to vibrate, in order to preclude the potential for brittle fracture of these high strength materials. The high yield strength of these materials also makes it more difficult to seal the tube-to-tubesheet joints if the old, copper-bearing alloy tubesheets continue to be used. The galvanic compatibility of the new tubes with the tubesheet must therefore be considered and may result in the need to clad or coat the tube sheet and/or provide a cathodic protection system.

Condenser retubing is obviously a very complex issue involving these and many other parameters. A comprehensive engineering and economic evaluation should be performed to arrive at the best retubing option for a given unit and site location. Most of the concerns that should be considered in a comprehensive retubing evaluation are listed randomly as follows:

- Cooling water chemistry
- Cooling water flow capacity
- Seasonal temperature variation
- Unit type (PWR, BWR, fossil)
- Seasonal unit performance with old versus new tubes
- Unit load and capacity factors
- Condenser design configuration (series/parallel zones)
- Tubesheet evaluation
- Condenser uplift evaluation
- Current performance issues (vibration damage, air leakage, back pressure limits)
- Condenser health (tubesheets, support plates, waterboxes)
- Utility's condenser experience (tube plugging, cleaning)
- Utility's condenser preferences (materials, maintenance techniques)
- Economic parameters (discount rate, labor rates, replacement power rate)
- Material availability
- Outage window
- Staging and warehouse space
- Pull space
- Load paths
- Rigging and handling equipment
- Complete versus partial/staged retubing
- Modular versus tube-for-tube technique
- Desired life of new tubes
- Availability of online tube cleaning system
- Ability to isolate waterboxes for online maintenance
- Radioactive contamination level
- Disposal options for old material

It is beyond the scope of this document to include a comprehensive treatment of this subject. However, additional detailed information may be found in References 3–8.

7.9 Miscellaneous Problems

Experience has shown that water in-leakage can be caused by some damage having been sustained by piping that had been allowed to run through a waterbox. An example would be drain piping from an LP turbine bearing, which could be placed only vertically and immediately below the bearing, thus being forced to penetrate the waterbox. Leaks from such sources are hard to locate even when using sensitive tracer gas techniques, partly because they are somewhat hidden from view but often because their leak rates are very small. In addition to noting the obvious, the importance of studying plant drawings and identifying all such obscure sources of potential leaks cannot be stressed enough.

7.10 Tubesheet-to-Waterbox Flange Seams

It is important to seal the interface between the tubesheet and the waterbox in order to eliminate corrosion beneath the tubesheet-to-waterbox gasket surface, which can result in condenser water and/or air in-leakage along the corrosion path as well as through the bolt holes. The sealing of this interface has been performed successfully over the years by coating the interior surface of the tubesheet and waterbox flange joint. The coating materials developed for this purpose have been designed to withstand the potential for differential movement between tubesheet and waterbox. As with all applications of epoxy material, proper surface preparation and the use of environmental controls are recommended in order to achieve successful long-term results.

7.11 References

1. Peter Tallman, "Condenser Tube Restoration," *Proceedings of the EPRI Condenser Technology Conference*, Charleston, SC (September 1–3, 1999).

2. Jerry Anderson, Scott Lapaguard, and Jim Mitchell, "Main Surface Condenser Tube-to-Tubesheet Joint Leaks Ramifications," *Proceedings of the EPRI Condenser Technology Conference*, Charleston, SC (September 1–3, 1999).

3. *Condenser Retubing Criteria Manual*. EPRI, Palo Alto, CA: May 1982. Report NP-2371.

4. *Condenser Procurement Guidelines*. EPRI, Palo Alto, CA: May 1985. Report CS-3844.

5. *Condenser Performance Test and Replacement Tubing Material Evaluation*. EPRI, Palo Alto, CA: April 1988. Report CS-5662.

6. J. M. Burns, R. L Stevens, and L. J. Corsi, "Modular Surface Condenser Retubing Considerations," presented at the Joint Power Generation Conference, 1989, TP 89-70.

7. J. M. Burns and P. H. Titus, “The Practical Application of Finite Element Stress Analysis to Problems of Operating Steam Condensers,” presented at the EPRI Condenser Technology Conference, 1990, TP 90-74.

8. J. M. Burns, M. W. Kimball, and R. B. Hahn, “New Approach to One-for-One Titanium Condenser Retubing Improves Reliability for Continued Unit Operation,” presented at the EPRI Condenser Technology Conference, 1993, TP 93-43.

8
EFFECTS OF AIR IN-LEAKAGE

Some air will always be present in the condenser shell operating under vacuum and is allowed for in the design. The principle source of the air present is due to in-leakage through openings that develop in joints and components of the turbine/condenser system operating under vacuum, allowing ambient air to enter. As indicated in Section 2, air and other noncondensables cause the shell side film heat transfer coefficient to decrease, generally in accordance with the data contained in Figure 2-3. Other noncondensables that can accumulate in the condenser shell include carbon dioxide as well as ammonia; the former result from decomposition of bicarbonates in the water and the latter result from the decomposition of boiler feedwater treatment chemicals such as hydrazine or morpholine. Further, in BWRs, oxygen and hydrogen are produced by radiolysis and add to the noncondensables.

All these noncondensables affect the thermal performance of the condenser. The oxygen content along with CO_2, when dissolved in the condensate, have corrosion and related consequences in other parts of the system including the boiler and turbine. An important effect on the condenser, related to the performance of its exhausters, is an increase in turbine back pressure when the amount of noncondensables exceed the condenser back pressure threshold for air in-leakage. This can have dramatic effects on plant heat rate. Air in-leakage has been accurately measured and related to excess back pressure by Harpster et al. [1,2]. The extra cost for additional fuel to maintain load has also been reported [1,2,3].

EPRI Report NP-3020 [4] also refers to the potential for dissolved oxygen (DO) to be present in the water stored in the condensate storage tank, especially when the makeup water source is connected to this tank. Harpster et al. [1] showed the dramatic difference in DO between (a) introducing oxygen-laden water into the condenser through a standard pipe just above the hotwell and (b) spraying it through a long distribution line in the steam flow above the tube bundle. The latter showed a reduction in DO to below 10 ppb.

8.1 Effects of Air In-Leakage on Thermal Performance

Section 2 reviewed how the presence of air or other noncondensables in the exhaust vapor has the overall effect of decreasing the shell side film heat transfer coefficient. Silver [5] noted that as little as 1% of air could have a very substantial effect, even though the steam pressure is still 99% of the total pressure under these conditions.

To further expand on the discussion in Section 2, as the exhaust vapor condenses on a lower temperature tube, the water vapor concentration in the vicinity of the tube is lowered. As a result, there is a natural flow of vapor toward the tube from the higher vapor concentration region surrounding the tube. Between adjacent tubes and particularly going deeper into the tube bundle,

there is a tendency for a negative temperature gradient, the inner tubes being lower than the outer tubes. This decreasing temperature not only produces a decreasing water vapor concentration gradient but also a water vapor partial pressure gradient; both of which cause water vapor flow toward the center of the tube bundle. This water vapor flow also scavenges any air present, dragging the air inward to the tube bundle where the shrouded air-removal section is located.

Operation of the air-removal region of the condenser was discussed in Section 2 where it was shown that due to its cooler operation with air present, further scavenging to the exhauster line occurs. Silver [5] as well as Mickowycz and Sparrow [6] showed similar results. Under normal conditions, the air-removal system is able to maintain the concentration of noncondensables at a level that does not affect the condenser performance. However, according to one model, if the concentration of noncondensables should rise due to air leakage, it can affect the rate at which heat can be transferred to the circulating water through the tube wall and inner and outer films. In such cases, there can be a noted rise in turbine back pressure and a related rise in the hotwell temperature. On the other hand, when air in-leakage exceeds the exhauster capacity at the operating suction pressure, the back pressure will rise, which can negatively affect both heat rate and/or generation capacity, as extensively studied by Harpster et al. [1]. Excess air in-leakage beyond the capacity of the air-removal system is a potential cause for a significant rise in back pressure.

There is another phenomenon known as *air binding* or *blanketing* that occurs due to a falling off in the performance of the air-removal system, an increase in air in-leakage, a shift of the location of baffles within the condenser, or poor tube bundle design. Unfortunately, the effect will not be uniform throughout the condenser but will concentrate around localized groups of tubes. Tucci and Bell [7] offer an excellent example of the latter. However, because the exact extent and location of the air binding is seldom known in a given case, it is difficult to apply with confidence the Henderson factors [8] depicted in Figure 2-3, even if the concentration of the noncondensables in the incoming exhaust vapor is known.

The effect of heat transfer on the performance of an operating condenser can be determined by comparing the calculated effective condenser U-coefficient with the ASME design value corrected for performance factor. However, a drop in U-coefficient could be due to either a drop in the shell side film coefficient or an increase in water side fouling. Unfortunately, although their combined effect can be computed, our present analytical tools do not yet allow us to quantify fouling resistance separately from the effect of any air present on the shell side resistance.

8.2 Effects of Air In-Leakage on Dissolved Oxygen

The consequences of excessive concentrations of dissolved oxygen (DO) in the condensate drawn from the condenser vary, depending on whether the unit is provided with a fossil fired boiler or nuclear steam generator, and whether the latter is designed as a boiling water reactor (BWR) or a pressurized water reactor (PWR). Because of the different consequences, each type of plant has its own threshold for condensate dissolved oxygen concentration that should not be exceeded.

With normal amounts of air ingress, the DO concentration should lie below the selected threshold. However, any air ingress into the condenser shell will create the potential for higher dissolved oxygen. If the source of air in-leakage lies below the condensate level in the hotwell, the increase in DO concentration may be severe. However, as shown in Figure 8-1 [9], the solubility of oxygen in water also varies with temperature; the higher the condensate temperature, the lower the concentration.

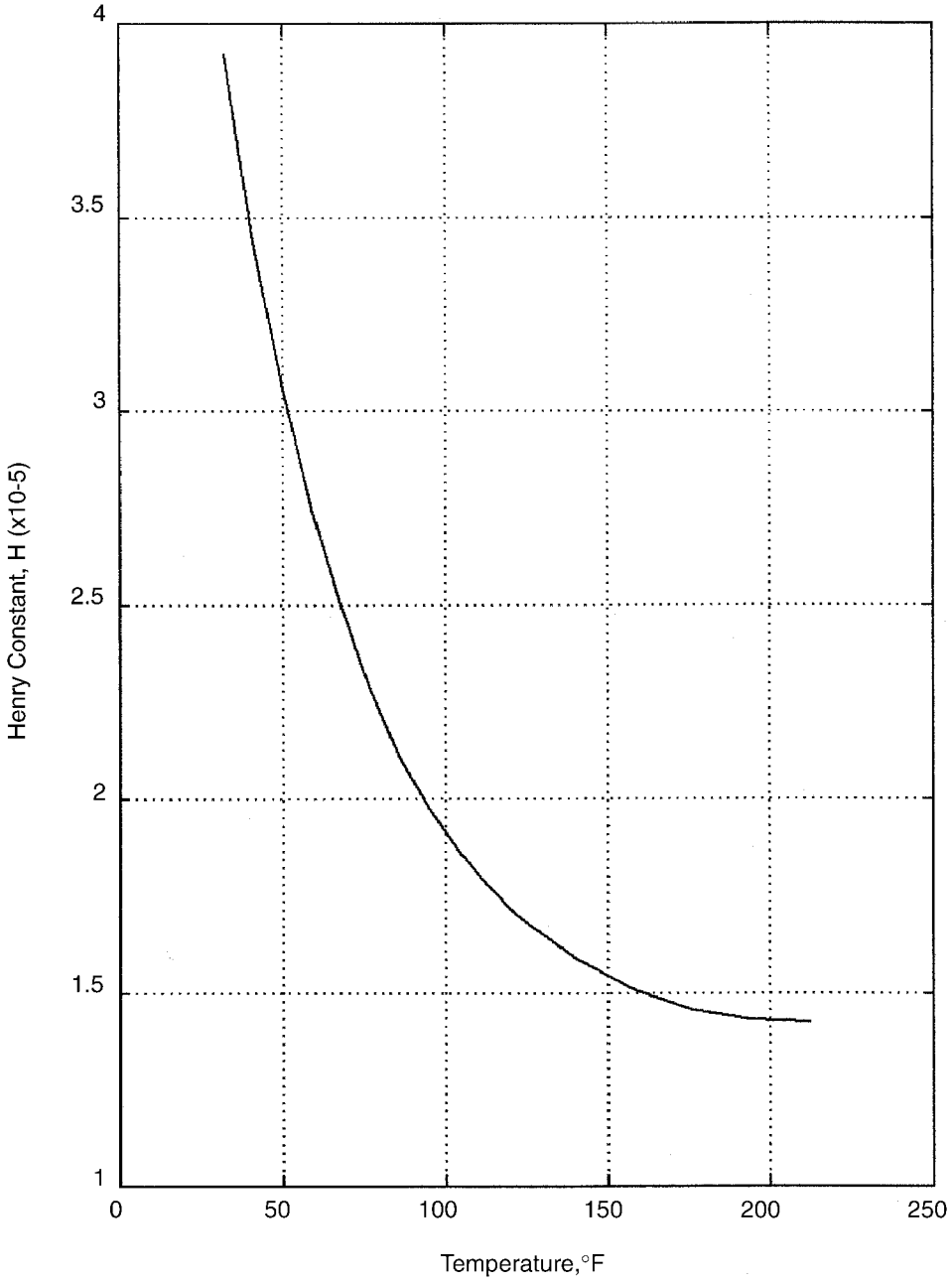

Figure 8-1
Solubility of Oxygen in Water
(from *Perry's Chemical Engineer's Handbook* [9])

Thus, it is preferred that the hotwell temperature be as close as possible to the saturation temperature corresponding to the back pressure and that condensate subcooling be avoided. Note that in Figure 8-1, the symbol H denotes the Henry constant as a function of temperature in the relationship:

$$X_a = P_a * H \qquad \textbf{Eq. 8-1}$$

Where

X_a = Mole fraction of oxygen in water
P_a = Partial pressure of oxygen in vapor above water (atm)

Unfortunately, some condensate subcooling occurs naturally as the condensate passes down from row to row through the tube bundle and the film on the outside tube surfaces becomes thicker. The normal laws of heat transfer cause the temperature difference across the film to rise, with the result that the mean condensate temperature falls below that of the vapor in the shell. The generally lower temperatures in the region of the air-removal section also increase the solubility of any oxygen present in the condensate draining from this zone. Of course, the provision of lanes within the tube bundles allows vapor that bypasses the upper tube bundles to regenerate or reheat the condensate cascading lower down and so tends to restore the temperature close to that of the vapor.

Guarantees on the degree of condensate subcooling are often included in condenser specifications, but the success of these features in raising the condensate temperature in the hotwell close to the saturation temperature of the vapor depends on the skill with which the designer has applied them. It should also be recognized that the degree of condensate subcooling can vary with load, increasing as the load is reduced.

To raise hotwell temperature, some plants are provided with means for sparging the hotwell with live steam. In other plants, nitrogen, even though a noncondensable, has been added deliberately to raise hotwell temperature, sometimes without noticeably affecting back pressure.

While air ingress is usually the reason for an increased DO concentration, there are other possible causes including the addition at the condenser of oxygenated water as makeup water. Dissolved oxygen in the water stored in the condensate storage tank can also be a source of DO in the condensate system. Thus, water retrieved from the condensate storage tanks should be deaerated before it is allowed to enter the feedwater system. Deaeration will be discussed in Section 8.3

The following sections discuss the consequences in the boiler of excessive concentrations of dissolved oxygen in the feedwater and the desired upper limits on its value for each of three different steam generating systems:

- Pressurized water reactors (PWRs)
- Boiling water reactors (BWRs)
- Fossil-fired boilers

8.2.1 Pressurized Water Reactors

As discussed in EPRI Report NP-3020 [4], early steam generator tube corrosion problems were attributed to phosphate chemistry control. To reduce the effects of the resulting tube thinning, secondary side chemistry was changed during the period 1974-75 to an all-volatile treatment (AVT) method. This change substantially reduced steam generator tube-thinning rates,, but, by 1976, steam generator inspections showed the onset of a new problem which came to be known as *denting*, a problem found to be associated with all plants using AVT water treatment methods. It was also found that denting could affect all steam generators provided with carbon steel tube support plates. *Denting* is the term used to describe a local reduction in the diameter of a steam generator tube.

The plants that have experienced "extensive" denting in their steam generators all have condensers cooled with seawater or brackish water; while a small number of plants experiencing "moderate" denting are cooled with freshwater. It has also been found that plants with copper-bearing alloys in the condenser or feedwater heater train exhibit a greater susceptibility to denting than those plants with all-ferrous systems.

The term *denting* is used to describe the constricting or mechanical deformation of the steam generator tubes as they pass through corroded carbon steel support plates. Such corrosion results from the formation of an acidic environment within the tube/tube support crevices due to the boiling concentration processes within the crevice. The volume expansion that occurs during the conversion of metal oxide fills the crevice with further oxide growth and results in tube deformation. The extent of denting appears to increase with the introduction into the steam generator of oxidizing species, such as oxygen or copper oxides.

Since oxygen concentration cells increase the carbon steel corrosion rate, a substantial incentive exists to effectively eliminate air or oxygen ingress into the PWR system, which therefore operates at very low DO levels. Tighter chemistry controls, elimination of copper components in the secondary systems, redesign of the steam generator support plates, and introduction of boric acid into the secondary chemistry program have combined to essentially eliminate denting as a problem in today's steam generators [10].

Chemical means are available to treat water containing dissolved oxygen in the bulk secondary solution so as to maintain the required low levels of DO in the steam generator. Hydrazine is the chemical most commonly used, and it reacts with dissolved oxygen according to the reaction:

$$N_2H_4 + O_2 \rightarrow 2H_2O + N_2 \qquad \textbf{Eq. 8-2}$$

At higher temperatures, hydrazine decomposes to produce ammonia that helps to maintain an alkaline pH so as to minimize acid corrosion.

Dissolved oxygen and nonreduced metal oxides (such as hematite) have been implicated in promoting intergranular attack (IGA) and stress corrosion cracking (SCC) of steam generator tubing when they are transported to the steam generator from the condensate and feedwater [11]. One of the most effective ways to decrease the transport of oxidants to the steam generators is the addition of excess hydrazine to the feedwater. Not only will excess hydrazine tend to reduce any metal oxides present to a less aggressive state (that is, convert hematite to magnetite), but it

will also lower the electrochemical potential (ECP) of the steam generator bulk water by as much as 150 mV [12]. This helps keep the ECP of the steam generator below that required to initiate and/or propagate IGA/SCC in the steam generator tubing. Accordingly, one of the strategies presented by the EPRI *PWR Secondary Water Chemistry Guidelines* [13] is to maintain >100 ppb hydrazine in the feedwater.

The EPRI guidelines require the feedwater hydrazine concentration to be maintained at least 8 times greater than the condensate pump discharge dissolved oxygen concentration, or a minimum of 20 ppb hydrazine. The EPRI guidelines also mandate the condensate pump discharge dissolved oxygen to be maintained below 10 ppb. To meet these requirements, daily sampling of the feedwater for hydrazine and continuous sampling of the condensate for Dissolved Oxygen is required.

Maintaining a low dissolved oxygen concentration in the condensate and feedwater will help to minimize steam generator corrosion.

8.2.2 Boiling Water Reactors

EPRI Report NP-2062 [14] indicates that BWRs commonly operate with higher DO concentrations than PWRs units. Because chemicals cannot be added to the reactor feedwater, BWR operation is forced to occur with neutral pH condensate and feedwater. As a consequence, a relatively high dissolved oxygen concentration in BWRs is required to passivate their carbon steel surfaces with a magnetite film. Thus BWR water chemistry typically requires the addition of oxygen.

Even without air in-leakage, the DO concentrations in a BWR are much higher than those for PWRs because the radiolytic decomposition of water in the reactor produces hydrogen and oxygen gases, which are carried over with the steam, and some of the oxygen then dissolves in the condensate. Because General Electric recommends that the dissolved oxygen level in both condensate and feedwater be maintained at a level of at least 20 ppb (but no greater than 200 ppb) in order to passivate the carbon steel in the system, little effort has been expended in BWRs to improve the efficiency of oxygen removal in the condenser.

8.2.3 Fossil-Fired Boilers

As in PWRs, oxygen concentration must be regulated to minimize the formation of preboiler corrosion products that tend to become attached to boiler heat transfer surfaces. In fossil-fired boilers, greater reliance is placed on the contact type deaerator, usually placed in the feedheater train between the high-pressure and low-pressure heaters.

The dissolved oxygen concentration can vary with load, tending to rise as the load falls. Adequate amounts of steam must be available to the deaerator during unit startup so that oxygen can be purged from the feedwater. If this is not the case, steam from alternate sources should be provided temporarily to the deaerator until such time as adequate amounts of extraction steam become available.

In general, the oxygen concentration at the condensate pump discharge header should be maintained between about 5 to 10 ppb during normal unit operation. However, DO should be monitored continuously, especially during load swings.

Fossil-fired boilers using the method of feedwater-oxygenated treatment should continue to maintain the same standards for oxygen concentration in the condenser hotwell. This will help ensure carbon dioxide minimization prior to the feedwater entering the powdex or deep-bed polisher systems.

The above applies to fossil-fired boilers generating steam at subcritical pressures. For supercritical boilers, the dissolved oxygen limits are different, and the boiler manufacturer should be contacted for advice regarding DO limits and appropriate feedwater treatment procedures

8.2.4 Dissolved Oxygen in Condensate Storage Water

The condensate storage tank, or its equivalent, is the principle source of makeup water for the secondary systems during normal operation, transients, and startup/shutdown operations, and its original source is water supplied by the plant makeup water system.

The condensate storage water is supplied to the condenser through appropriate piping and may be separately introduced into the condenser, dependent on whether the supply is for normal makeup or extraordinary makeup. The latter is used particularly for rapid depletion of the hotwell inventory, such as following a reactor or turbine trip, or for filling a drained hotwell prior to startup. Unfortunately, depending on its degree of aeration, the makeup water can be the second most significant source of oxygen ingress into the secondary system. Thus, the extent of oxygen ingress into secondary systems is influenced by:

- The effectiveness of deaeration of the makeup water entering the condenser
- The rate of makeup water flow
- The oxygen content of the condensate storage water

The influence of the makeup water flow rate and the condensate storage water oxygen content are addressed below, while the effectiveness of condenser deaeration is discussed below in Section 8.3.3.

Since oxygen ingress is a function of condensate storage and makeup water flow rate, the potential effect of oxygen concentration in the makeup water on the condensate oxygen concentrations can be estimated as a function of the ratio of makeup water to feedwater flow rates. If there is little deaeration of the makeup water before it reaches the hotwell. it can be demonstrated that condensate oxygen levels can be excessive, even for relatively low makeup water oxygen concentrations (~500 ppb).

The degree of deaeration is contingent on both the location and method of introducing the makeup water as well as on the power level. At low power, the condenser may not deaerate the

normal makeup adequately, while extraordinary makeup is frequently introduced into the lower portion of the condenser shell where deaeration is likely to be poor.

Normal makeup replenishes the hotwell inventory depleted by leakage, as well as any steam generator blowdown not returned to the condenser. This replenishment varies from plant to plant, tending to be less than 1% of feedwater flow for older plants with lower makeup system capacities and as much as 3% for short periods in newer plants. Steam generator water shrinkage during down-power transients and, to a lesser extent feedwater train water shrinkage, may result in a rapid inflow of large quantities of makeup water, particularly if a plant trip has occurred or the hotwell level is not closely controlled. There is also the possibility of condensate oxygen concentration spikes occurring during rapid down-power transients, where steam generator level recovery could account for a major part of the hotwell inventory depletion and, consequently, a large inflow of aerated makeup water.

Another source of oxygen ingress into the storage water occurs during startup, when aerated hotwell water is returned to the condensate storage tank, resulting in an increase of the storage water oxygen levels. Both of these sources of oxygen can be minimized by adding hydrazine to the condensate storage tank water, a practice in some plants as noted by Shor et al. [15]. However, the chemical scavenging effectiveness of hydrazine is very dependent upon temperature.

In summary, the use of efficient makeup water systems, storage tank seals, nitrogen blanketing or floating heads on storage tanks, and possible improvements in the hydrazine addition process all tend to reduce condensate water oxygen levels to the low ppb range.

8.2.5 Other Sources of Dissolved Oxygen

Oxygen can enter the condenser and condensate system from several sources in addition to air in-leakage. One of these sources can be the condensate drains, generated within the feed system and discharged into the condenser at pressures less than 30 psig (2.1 kg/cm^2). Lower pressure drains are usually from the gland leakoff condenser, the gland leakoff ejector condenser, the air ejector intercondenser, the low-pressure shell-and-tube feedwater heaters, the drain cooler, and any distilling plant. Of course, since there are many variations in feed system design, the components listed above may not apply to all plants. Some of these drains cascade from one feedwater heater to another in order to recover their heat and, thereby, reduce thermal losses from the cycle. Not infrequently, and especially in cascading systems, the drains are mixed and then discharged collectively into the condenser.

Many of the condenser drains are also often at below atmospheric pressure and, thus, may be a source of air infiltration to the condenser. The inter- and after-condenser drains from the steam air ejector are a further possible source of infiltration of noncondensable gas. Clearly, in order to rectify the effect of these various sources of air in-leakage, provisions must be made for their removal by deaeration to a degree sufficient to maintain the desired purity of the feedwater.

Most condensate drains are returned to the condenser at temperatures above the saturation temperature corresponding to the condenser pressure. In general, a temperature of 5°F to 10°F (2.8°C to 5.6°C) above the condenser temperature can provide sufficient energy to deaerate the

condensate returns, provided there are certain design features in the condenser [16], for example, steam sparging.

Oxygen can also be absorbed by the condensate in the condenser as a result of condensate subcooling. For instance, the temperature gradient across the condensate film surrounding the tubes within the condenser inherently tends to subcool the condensate This tendency will be increased by any noncondensable gases present in the vapor; their degree of absorption is in accordance with the partial pressure gas laws (see Figure 8-1).

8.3 Deaeration of Condensate and Makeup Water

The source of and the need to remove DO and other noncondensables from condensate drains and makeup water entering the condenser has been discussed in Sections 8.1 and 8.2. While air removal is the process of extracting the gaseous phase of these noncondensables from the condenser, deaeration is the process of removing the small fraction of these gases dissolved in the condenser condensate that eventually end up in the hotwell condensate.

Deaeration protects station systems from corrosion that can extend the period between forced outages [1] caused by events that can have dangerous consequences. There are two primary reasons for deaeration:

- Removal of dissolved oxygen
- Removal of dissolved carbon dioxide

Both of these gases are corrosive to feedwater components and the boiler. Since all deaeration processes involve the use of steam for heating or scrubbing, there are two other major benefits:

- Feedwater temperature raised
- Unit heat rate improvement

The temperature rise in deaerating condensers is not as high as in condensate and feedwater deaerators operating at higher pressures, but then, neither is the steam energy input very high. The steam used is generally waste steam from other higher temperature or higher pressure processes, which would otherwise be used in another form of heat recovery.

By definition, a deaerator is a means for removing DO from water to a level below 0.005 cc oxygen per liter of water. This is equivalent to 7 ppb DO. As mentioned, the deaerator also removes other dissolved gases including ammonia and CO_2. Generally, CO_2 can be sufficiently reduced by deaeration to where it will not contribute to corrosion buildup in the condenser system.

Deaeration can be performed using deaerating heaters, deaerating condensers, or in standalone spray tray or spray scrubber deaeration equipment. The following will discuss the various methods. All have unique benefits, but it is important to performance that whatever means are present, the equipment should be operated in accordance with the manufacturer's procedures or with procedures developed internally.

8.3.1 Condensate Reheating

The process of deaeration reverses those conditions that caused the condensate to absorb oxygen by:

- Reheating the condensate to raise it close to the saturation temperature corresponding to the vapor pressure; the higher the temperature the lower the solubility of oxygen.
- Providing a method for dispensing the water so that dissolved oxygen can reach a free surface and be released from the water.
- Bringing the water to its equilibrium saturation temperature (boiling point) to minimize its solubility.
- Venting or otherwise removing the released oxygen to prevent reabsorption in the water.

Condensate reheating within the condenser is accomplished by allowing the condensate to fall through a steam blanket between the bottom of the tube bundle and the surface of the hotwell. This steam blanket is formed by exhaust steam from the turbine that is directed around the tube bundle, or in "steam lanes" in the tube bundle, to the lower part of the condenser and is directed to the bottom of the condenser and hotwell area in such a manner that a substantial amount of its velocity energy is converted to pressure. In this way, the local static pressure in the hotwell area and under the tube bundles may actually exceed the static pressure at the condenser inlet. The condensate falling from the tube bundle through this zone of increased static pressure can be heated to the saturation temperature and, thereby, effect deaeration of the condensate.

One characteristic of this static pressure in the hotwell area is that it is load sensitive. The steam flow paths around the tube bundle and through the steam lane in the tube bundle are fixed dimensionally and are sized for steam flows in the higher power ranges. Thus, full reheating of the condensate is not achieved at the lower power ranges, causing the dissolved oxygen levels to rise. To overcome this characteristic, some condensers incorporate a system to admit steam into this deaeration zone in order to achieve the desired reheating and deaeration at low loads.

With a sufficient steam blanket available, a dissolved oxygen content of about 30 ppb can be achieved with a 12-inch (0.3-m) free fall of condensate [16]. To reduce this level to less than 10 ppb, a 30- to 50-inch (0.8- to 1.3-m) free fall is required.

One other technique used to preheat the condensate is the use of trays in lieu of a deep steam blanket. These trays are similar to those used in tray-type steam deaerators and can be used where there is a severe limitation on condenser height. The trays slow the travel of the condensate to permit additional heating.

8.3.2 Condensate Returns

Condensate returns to the condenser are normally at a higher temperature than the saturation temperature in the condenser and have variable dissolved oxygen content. A temperature of 5°F to 10°F (2.8°C to 5.6°C) above the condenser saturation temperature, quite possible with feedheater drains, is usually sufficient to bring about deaeration. However, to provide the time

for efficient deaeration, the condensate returns should enter above the water level in the hotwell and be sprayed into the space to improve the efficiency of the process.

It should be noted that spraying is an important part of the deaeration process. A solid stream of water will not deaerate efficiently even under ideal thermal conditions. Spraying the water into the steam space reduces the water particle size and improves the heating of the water as well as the release rate of the dissolved oxygen. This is particularly true of steam jet air-ejector (SJAE) intercondenser drains. These drains have been in direct contact with noncondensables in the intercondenser and special care must be taken to ensure that the spray velocities are sufficient to reduce the water particle size and that these drains enter high enough in the condenser to ensure adequate reheating. The loss of a seal between the SJAE intercondenser and the main condenser, which can occur if the loop seal flow is too high, will allow air in-leakage directly into the main condenser.

While good maintenance inspection and testing are the major preventive actions for equipment defects, reduction in the number of penetrations requiring field welds will help in the minimization of air in-leakage. Because of the variations between plants, specific design recommendations are not feasible. Consideration can be given to the concept of directing drain lines, seal water lines, and moisture removal lines into a separate tank and delivering the water, via an appropriate pump, to the upper condenser shell. However, as with low-pressure drain tanks, this concept introduces another vacuum system for which equivalent leak tightness must be provided and could be considered counterproductive. In summary, within the context of standard practice, the apparent solution to penetration tightness is good penetration design, installation, and testing. A special engineering study and the development of new penetration techniques would be necessary to significantly reduce the number of penetrations.

Another source of oxygen ingress into the storage water occurs during startup when aerated hotwell water is returned to the condensate storage tank, resulting in an increase of the storage water oxygen levels. Both of these sources of oxygen can be minimized by adding hydrazine to the condensate storage tank water, a practice in some plants as noted by Shor et al. [15]. However, the chemical scavenging effectiveness of hydrazine is very dependent upon temperature. In summary, the use of efficient makeup water systems, storage tank seals, and possible improvements in the hydrazine addition process all tend to reduce condensate water oxygen levels to the low ppb range.

8.3.3 Condenser Deaeration

To strip the condensate, heater drains, and makeup water of noncondensables, condenser deaeration capability relies on the action of steam flow, particularly steam traveling below and up through the tube nest. This action must occur either before the noncondensables reach the hotwell surface or at least before the water is drawn very much below the surface. As the water is drawn below the surface, the liquid static head causes the water to become subcooled at a rate that is dependent on condenser back pressure and depth below the hotwell liquid surface. Stripping of the subcooled water below the hotwell surface, either by steam or gas, is difficult to achieve during the short exposure time when the condensate is transported from the hotwell surface to the sump.

There is a distinct motivation for improving condenser deaeration even where feedwater oxygen concentration is very low since, assuming downstream lines are leak tight, lower hotwell oxygen content would reduce the potential for corrosion in the feedwater condensate train and thus the amount of corrosion product transported into the steam generators. Recent studies concerning high oxygen levels in one PWR plant showed that above normal iron and copper feedwater concentrations at the low-pressure feedwater heater outlets, immediately upstream of the feedwater pumps, were attributable to high condensate oxygen levels. Possible methods for improving condensate deaeration are discussed below.

Effective stripping requires the condensate drain and/or makeup water to be at or near the saturation temperature, corresponding to the prevailing condenser pressure, for a sufficient length of time to allow dissolved gas to diffuse out of the particle or film to the liquid gas interface. This removal is most readily accomplished when the condensate and other major water flows are dispersed into small particles or thin films. These conditions for deaeration have long been recognized, and modern deaerating condensers provide for an upflow of steam through the condensate rain falling through and from the lower tubes in the tube nest. The degree of hotwell deaeration achieved by the process is influenced by the degree of subcooling of the condensate rain. If the subcooling is significant and/or the contact with the countercurrent steam inadequate, the dissolved gas will remain in the water delivered to the hotwell. Figure 8-1 illustrates the importance of minimized condensate subcooling in reducing the condensate oxygen content.

In actual full power operation with a well-designed and -operated deaerating condenser, most of the condensate is normally very close to saturation and is likely to be adequately deaerated. However, if significant quantities of condensate become subcooled, particularly in the air-removal regions, in the cooling water inlet regions and at low cooling water temperature or low load conditions [16], then the net hotwell oxygen level will increase and may be excessive.

It should be mentioned, however, that local subcooling particularly in and around the air-removal section is crucial to removing air from the condenser since the resulting scavenging process (see Section 2) concentrates the noncondensables in this region. Without this process, air binding could occur.

At reduced power operation, low cooling water temperatures, and/or high air in-leakage, the upflow of steam will be reduced or will be less effective relative to the subcooled fraction of the condensate. In fact, operating experience with deaerating condensers indicate less efficient deaeration at low power levels. This experience may be the result of a number of factors, such as higher air in-leakage, reduced air ejector capacity, and lower outlet cooling water temperatures. However, the reduction in gas stripping capability is also a probable cause of inefficient deaeration.

The design options for improvement of deaeration in condensers have been identified in numerous reports. The options consist principally of methods for:

- Further improving steam/condensate contact in the lower region of the condenser
- Augmenting the condenser deaeration with hotwell deaeration
- Ensuring adequate air-removal capacity

- Introducing drain water and makeup water high in the shell, preferably above the tube nest [1] and providing for adequate distribution
- Reducing circulating water flow rate during low loads to reduce subcooling, if permissible

In considering these design options, maintaining stringent condensate dissolved oxygen levels should be the objective.

8.3.4 Condensate Steam Sparging

This method consists of providing steam nozzles just above the maximum hotwell level, fed by extraction steam from an appropriate source. The nozzles would spray up toward the tube nest and would be arranged in a manner to distribute steam preferentially in the regions of maximum local condensate subcooling, for example, near the cooling water inlet region. The steam supplied by the nozzles would offset the subcooling, augment the normal steam upflow, and be regulated to ensure the condenser pressure would not exceed the design value. The sparging system would function mostly during reduced power operation and during startup.

There is an approximately linear relationship between sparging steam flow requirements and average or net condensate subcooling; the condenser steam sparging flow is approximately 2% of the main steam flow when the average condensate subcooling is about 30°F (-1.1°C). The improvement of deaeration by this method can be enhanced by adding distribution plates or trays that would reduce the condensate water drop size or film thickness and facilitate the release of dissolved noncondensable gases. Such an arrangement amounts to applying the principles used in deaerating heaters for the purpose of reducing condensate oxygen levels. More space will be needed between the bottom of the tube nest and the hotwell water surface.

8.3.5 Hotwell Deaeration

Hotwell deaeration is an extension of the condenser deaeration process described above with the exception that the steam sparging nozzles are located below the surface of the hotwell water. This method is well known and is applicable during startup operations, when heating the hotwell water and subsequent deaeration are the objectives. It relies on the hydraulic motion of the bubbles to break up the water, which is already near the saturation temperature, and so release the dissolved gases. Hotwell deaeration also relies on an extended period of exposure (< 20 minutes) to the sparging steam. Nitrogen and other gases have been used on small-scale applications to perform a similar function.

Hotwell steam sparging has been effective during startup [4]. In addition, test results showed that at low steam and cooling water loads, steam sparging at flow rates 0.4 to 0.6% of the condensate flow reduced the condensate oxygen levels from 60-70 ppb to below 20 ppb. However, comparable reductions at high power levels were not observed, possibly because of the effectiveness of the condenser deaeration under these latter conditions.

8.3.6 Drain Return to Condenser

As noted previously**,** the low-pressure drains are another major source of air ingress into the condenser. Air in-leakage into the vacuum regions of the turbine, the extraction system, and low-pressure heater shells becomes dissolved in the condensate drain water, which in many plants is then returned to the condenser. Effective deaeration of the drain water depends upon the location and manner in which it is introduced into the condenser. For example, if the drain water is dumped into the lower region of the condenser shell, deaeration is likely to be inefficient or nonexistent. To ensure efficient deaeration, drain water flow must be dispersed in relatively thin films that pass through or are in contact with counterflow steam before it reaches the hotwell.

One way to accomplish more efficient drain water deaeration is to introduce the drain water into the condenser above appropriate regions of the tube nest and to distribute the inflowing water over perforated plates. This method facilitates contact between the drain water and upflowing steam. For example, at one plant drain lines were brought in above the tube nest, but often they are introduced lower in the shell. In another plant, high-pressure and turbine gland seal drains are returned to the base of the hotwell. Spray devices would provide better conditions for deaeration than would perforated plates, but would require higher upstream pressures to be effective. Specific perforated plate designs would have to be provided for each condenser configuration. However, it is estimated that two 3 x 5 feet (0.9 x 1.5 m) perforated plates with 1/4-inch (6.4 mm) diameter holes in each shell would provide reasonable distribution in a condenser of an 1100 MWe plant.

8.3.7 Makeup Water

The makeup water is another important source of oxygen ingress, particularly if, as in many plants, the condensate storage water is not deaerated. Since the water temperature is usually below the saturation temperature, its dissolved oxygen content is high. As already noted, where the makeup water oxygen level approaches the equilibrium value of 10 ppm for aerated water at ambient temperatures, the effect on the condensate oxygen levels is pronounced, assuming there has been little deaeration of the makeup water as it flows into the condenser. Plant makeup water flow rates vary widely but are generally in the range of 0.1% to 1.0 % (20 to 300 gpm or 76 to 1136 lpm) of the rated feedwater flow. Preheating of makeup water would assist in deaeration. However, in existing condensers, rearrangement of the internal spray piping might be necessary to avoid damage to the condenser.

The design considerations for reducing the effect of makeup water oxygen content are similar to those for drain flows; namely, they involve introducing the water through sprays mounted high in the shell, preferably above the tube nest, and dispersing it in a manner that will provide good contact with the steam. The high pressures available and the relatively small quantities for normal makeup requirements favor the use of spray nozzles. Such nozzles, located in the tube nest region, are used for normal makeup in a number of PWR plants. Consideration should be given to introducing the normal makeup water, via spray nozzles, above the tube nest. Delivery of normal makeup water to the hotwell should be avoided.

Unless makeup water is thoroughly deaerated before or after the water enters the condenser, oxygen ingress from this source can be significant.

8.3.8 Air-Removal Capability

The air-removal capability in relation to condensate oxygen levels is primarily meant to limit the air-cooling zone to that provided for in the design of the condenser tube bundle. Extension of the air-cooling zone may increase condensate subcooling and thus oxygen absorption. Such a condition can exist when the capacity of the air-removal system is exceeded due to excessive air in-leakage or problems with the air-removal equipment.

Steam jet air ejectors (SJAEs) have very limited ability to handle excess amounts of air in-leakage. Instead of a moderate increase in suction pressure, SJAEs exhibit a "break" or rapid increase in suction pressure. An SJAE designed to operate at 1.0 in. HgA (3.4 kPa) will rise to 4 to 5 in. HgA (13.6 to 17 kPa) with only a moderate increase in air in-leakage above design.

One advantage of liquid ring vacuum pumps (LRVP) is their capability to handle increased air in-leakage with only a moderate rise in LRVP suction pressure. For example, if the LRVP in Figure 3-7 is furnished with 60°F (15.6°C) cooling water it will operate at 1.0 in. HgA (3.4 kPa) when the air leakage is 30 SCFM. Should the air in-leakage increase to 43 SCFM, the suction pressure would rise to 1.25 in. HgA (4.2 kPa). In other words, with a 43% increase in air in-leakage, the pressure rise is only 25%.

Power plant engineers should strive to achieve optimum efficiency in the plant heat rate. One important step in this direction is to ensure that the operating vacuum of the condenser is dictated by the condenser design and not by inadequate venting capacity. For this reason it is desirable to maintain air leakage rates well below the HEI tabulated rates for which the venting system was designed. Note that the condenser operating pressure will rise to the level of the venting system, if the venting system is unable for some reason to achieve the same vacuum level as the condenser.

Because the venting equipment normally has excess capacity, a rise in air in-leakage may be masked because no loss of condenser vacuum is apparent. For this reason, baseline air leakage rates in the plant should be monitored. Then, if a sudden rise in in-leakage is detected, the leak can be corrected before affecting the plant heat rate. For air leak monitoring, refer to Section 2.

Where steam jet air ejector capacity is marginal, a moderate increase in the removal capacity of previously installed ejectors is possible by reducing the entrained moisture from the condenser vent line before the ejector suction port. This can be accomplished by addition of a "pre-condenser" placed in the vapor line before it enters the ejector suction. However, removal of significant quantities of moisture is likely to require a chilled water source with temperatures in the 35–40°F (2–4°C) range.

Should an increase in LRVP capacity be desired, it may be possible to add an ejector and intercondenser ahead of the LRVP. This can be done to increase air-handling capacity or to decrease the suction pressure, as operating conditions warrant.

8.3.9 Air-Removal Capability and DO

Maintaining dissolved oxygen (DO) at a low level is a critical part of station operation. To emphasize its importance, the following section is included to provide additional references to other studies and experiences related to DO.

The air-removal capability in relation to condensate DO levels is primarily meant to limit the air cooling zone to that provided in the design of the tube bundle. Extension of the air-cooling zone increases condensate subcooling and oxygen absorption. Such a condition exists when the capacity of the air-removal system is exceeded and/or the air in-leakage is extremely excessive. However, air-removal exhausters and particularly air ejectors are optimized at a single design point for the purpose of rating. Their capacity will vary differently from their design value, depending greatly on the exhauster type and operating condition. For example, steam jet air ejectors are known to shut down if the motive steam pressure deviates from the design pressure. The rated performance on one air ejector design was 164 lb/h (75 kg/h) of mixture at 1.5 in. HgA (5.1 kPa); while at 1.0 in. HgA (3.4 kPa), it was 86 lb/h (39 kg/h), showing that a reduction in pressure by a factor of 1.5 can result in a capacity reduction by a factor of 2. Piston type and liquid ring sealed exhausters have a less drastic capacity variation with pressure. The latter will change by a factor of 1.4 for the same pressure reduction. For more discussion on exhausters, see Section 3.

The principal effect of a limited air-removal capacity is that, under off-design operating conditions such as low cooling water temperature, the venting of the condenser may be inadequate, causing the air cooling zone to be extended and resulting in a higher condensate oxygen absorption even without the condenser vacuum exceeding the design value. This could emphasize the desirability for air-removal capacities well in excess of standard requirements. It should be noted, however, that excessive air-removal capacity, while avoiding some limitations on condenser deaeration, would only compensate for excessive air in-leakage to a limited degree. Excess air-removal capacity has a potential to mask uncorrected air in-leakage because no loss of condenser vacuum is noticed. However, the ability to record air in-leakage continuously [2] eliminates this concern. Further, the low cooling water assumed at the beginning of this discussion should be rare since normal environmental conditions should have been considered in the plant design.

The effects on subcooling of a change in air in-leakage, which relates to zone extension in the air-removal section, was discussed by Harpster et al. [1,2]. For a dual-pass condenser with its two air-removal sections internally connected in series, the removed gases changed in temperature from 114°F (46°C) starting with 1.5 SCFM air in-leakage to 90°F (32°C) at an air in-leakage of 45 SCFM. A similar result was noted when the exhauster capacity was reduced. Although air in-leakage remained constant at 2 SCFM, the temperature dropped due to less water vapor being removed from the air-removal section as capacity was lowered from 1600 to 200 ACFM. The important finding in both studies is that the air-removal section and its equilibrium gas/vapor temperature vary with water vapor to air mass ratio in the same direction.

Where air ejector capacity is marginal, a moderate increase in the removal capacity (~18%) of already installed ejectors is possible by removing the entrained moisture from the condenser vent line before the air ejector suction port. The improvement can be estimated from theoretical considerations, resulting from the increase in molecular weight of the mixture as the moisture

content is decreased. For example, the typical average molecular weight of mixtures is around 21 while that of dry air is 29. The increase in capacity is proportional to the square root of the ratio of the final to the initial molecular weight, that is:

$$\sqrt{\frac{29}{21}} = 1.18$$

Although the flow of air is low (40–60 SCFM), removing significant quantities of moisture from the mixture is likely to require a chilled water or other cooling system capable of achieving temperatures in the 35–40°F (1.7–4.4°C) range. Such a system would have to be adapted to low vacuum conditions and would have to be maintained airtight. There are several possible and reasonably straightforward engineering designs that emphasize leak tightness, and they should have a special emphasis on vacuum tightness. If not vacuum tight, they may create more problems than they solve.

Above all, adequate air removal requires subcooling of the vapor. Appropriate attention to proper operation of both the condenser and the venting equipment will result in low DO.

8.4 Deaeration Outside the Condenser

In addition to applying good practices to deaerate within the condenser, some plants have an external standalone deaerator because large air in-leaks can occur and increase the DO to unacceptably high levels. As mentioned in the introductory section, there are two basic types: the spray tray and spray scrubber type units. The following comments are abstracted from Garay [17]:

> A deaerator should be used whenever there is a condensate system. Savings in heat will also be realized whenever there is a blowdown flash tank, or trap discharges, all of which can be used by the deaerator.
>
> Adequate venting of the removed gases is required. Deaerators will function at pressures above or below atmospheric, but at sub-atmospheric pressures, special provisions such as air ejectors must be made to vent the unit properly.
>
> Deaerators can be of the following types:
>
> - Spray tray type
> - Spray scrubber type
> - Spray scrubber horizontal compact type
>
> All of these types of deaerator will remove oxygen down to 0.005 cc/L or less and free carbon dioxide to zero ppm when tested by APHA method, assuming the bicarbonate alkalinity is not less than 5.0 ppm expressed in terms of calcium carbonate. Table 8-1 shows the combinations of criteria appropriate for each type of deaerator and are helpful in deaerator selection.

Table 8-1
Deaerator Selection Criteria

Deaerator Type	Selection Criteria Notes				
Spray Tray	1	2	3	4	5
Spray Scrubber	3	4	6	-	-
Horizontal Compact Spray Scrubber	3	4	7	8	-

Notes

1. Will deaerate with varying steam pressure, where pressure is approximately proportional to capacity.

2. Will deaerate with a 5°F (2.8°C) or more temperature rise. (Operating temperature minus average inlet water temperature).

3. Will deaerate with a 30°F (16.7°C) or more temperature rise. (Operating temperature minus average inlet water temperature).

4. Will deaerate with constant steam pressure of 2 psig (0.14 kg/cm^2) or more, up to and including design pressure.

5. Most expensive (Based on 10 minutes storage).

6. Medium expense (Based on 10 minutes storage).

7. Least expensive (Based on 10 minutes storage).

8. Minimum head room, giving maximum head for net positive suction head (NPSH) on feed pumps.

Referring to Note 1 above in connection with the tray type unit, if there is a changing pressure condition such as encountered in an electric generating station where the turbine extraction pressure varies with station load, the deaerator pressure and capacity is affected by the same variation.

As the station load decreases, the pressure of the extraction steam also reduces and the water in the storage section begins to flash off. The need for steam from the turbine drops off, and in many cases the nonreturn valves close to prevent back flow into the turbine. The flash steam passes upward through the tray section to the preheating section to heat and deaerate the incoming water. However, when the load and pressure increases, the steam once more passes through its normal circuit to complete heating and deaeration. Heating and deaeration are, therefore, accomplished under all load conditions.

In the case of a spray scrubber or atomizing type deaerator, if a pressure reduction and flashing in the storage section occurs, the flash steam will take the path of least resistance and pass directly to the preheating section. Heating of the incoming water will be accomplished, but deaeration will not because the steam did not pass through the scrubbing section.

Thus, if a pressure variation exists, the tray type unit should be selected.

In the atomizer type, the atomizer control should be adjusted to about 3 to 5 psi (20.7 to 34.5 kPa) pressure drop, to provide sufficient agitation. This drop is maintained at all steam flows, so the atomizing deaerator has a pressure drop that does not occur in the tray type. At high terminal pressure, this loss will not be noticed; but at low pressures, it will be appreciable.

A more serious disadvantage of the atomizing deaerator occurs when there is a load decrease on a turbine supplying extraction steam to the deaerator, causing the steam pressure in the deaerator to decrease. Since the water in the storage reservoir is saturated, it will flash when the pressure drops and will supply steam necessary for heating incoming feedwater. This flash steam does not pass through the atomizing valve, and will not provide sufficient agitation for proper deaeration. Figure 8-2 illustrates a combination unit.

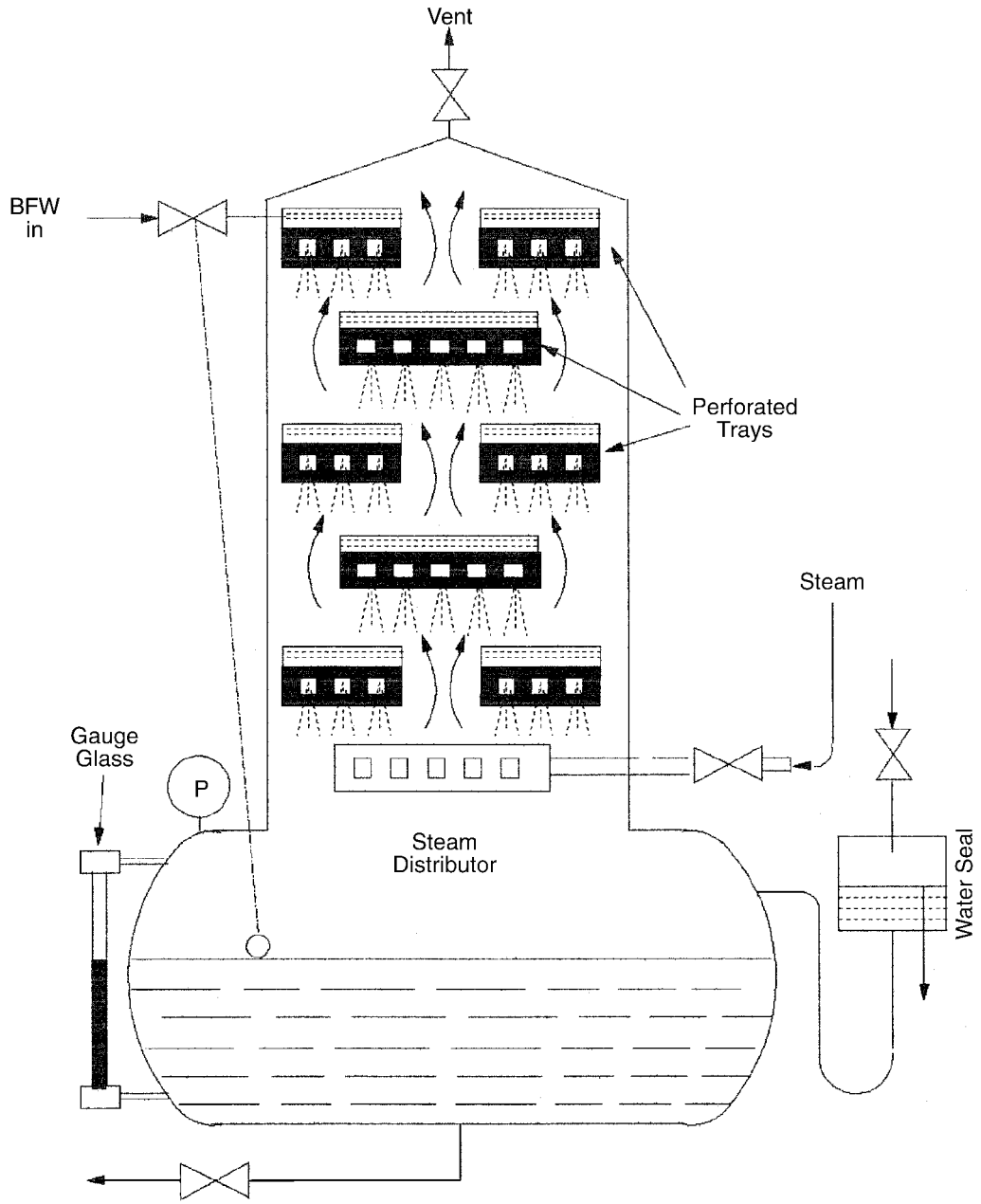

Figure 8-2
Combination Unit Deaeration Heater

Minimum Storage Requirements

Two- or five-minute storage may be used if there is 100% makeup (no returned condensate) and all water passing to the deaerator is being controlled by the inlet regulating valve.

Two- or five-minute storage may also be used if condensate and makeup are mixed in a condensate storage tank upstream of deaerator, with all feedwater

(makeup and condensate) passing to the deaerator being controlled by the regulating valve placed at the inlet to the deaerator. All system surges and storage are taken care of by the condensate storage tank.

Maximum Storage Requirements

Ten minutes or more storage is to be used if condensate is being returned to the deaerator uncontrolled, with the makeup passing through and being controlled by the inlet valve. Ten-minute storage is usually enough to handle most plants. More than 10 minutes is used to handle great quantities of system surges and batch type heating.

8.5 Experience with Deaerating Heaters

The role of deaerating heaters in condensate feedwater trains has not been clearly established in domestic plants. They are installed in Crystal River Unit 3 (PWR), Davis-Besse (PWR), V.C. Summer (PWR), and Perry (BWR) plants. They are also used in many of the Japanese PWR plants (the OHI plants are a recent exception) and Russian PWR plants. The Beznau units in Switzerland also have deaerating heaters. The value of deaerating heaters in controlling condensate oxygen levels is difficult to assess because of the limited data available and the uncertainties regarding the interpretation of that data. However, it was possible to show that feedwater oxygen concentration at the high-pressure heater outlet over a range of loads is lower with, rather than without, a deaerating heater; although, after several days at high-power operation ($\geq$75%), the oxygen concentrations were about the same (5–10 ppb) for both cases. The degree to which the copper alloy heat exchange tube materials in the high-pressure heaters influenced the hydrazine reaction with oxygen and/or the oxygen consumption, thereby affecting the results, was not accounted for.

Others have investigated fossil plant operation with and without deaerators. Their data indicate significant reductions in condensate oxygen content where deaerators are used. This reduction is particularly evident at reduced loads. The methods of measurement and the expected accuracy in the low ppb range in obtaining these data were not reported. Similar observations regarding deaerator effectiveness were reported during the field survey on oxygen control at the Davis Besse PWR plant. These observations indicated that during full-power operation, when the deaerator influent oxygen concentrations were in the range of 25 ppb, the effluent concentrations were about 4 ppb. This performance of the deaerator was particularly significant in view of the lack of other circumstances conducive to oxygen absorption from the condensate, namely the absence of copper alloy heater tube materials. The transport time through the deaerator hold tank was about five minutes, which was larger than the transport time through the high-pressure heaters in a comparable plant. Thus, about two minutes' more time was available for the hydrazine scavenging because of the deaerator hold tank. Yet the hold tank was at somewhat lower temperature, and it was without the tube surface oxides to promote the oxygen scavenging process. In any event, no specific data are available that showed the actual degree of oxygen scavenging provided by the hold tank.

As seen in an oxygen control field survey, the experience of the Ginna plant, which does not have deaerators, indicated a capability to control condensate oxygen concentrations within 10

ppb during power operation by limiting air in-leakage to 5 SCFM or less. Similar controls exercised at the OHI Unit 1 plant showed that the condensate oxygen levels were less than 10 ppb after five days of operation at power levels above 75%. Complete water sealing of the drain valves under vacuum, improvement of the makeup water inflow arrangement, and enlargement of the distance between the tube nest and hotwell liquid surface (thus reinforcing the reheat effect of the steam in this region) contributed to this low condensate oxygen level in the OHI Unit 1 plant.

In addition to consistently lower oxygen concentration in the feedwater downstream of the deaerators and the associated potential for reducing corrosion effects in the steam generators, turbines, and high-pressure heaters, other advantages of deaerators, as previously identified include:

- Providing a capability, by the hold tank, to supply a large quantity of hot, demineralized, deaerated water for normal feed or for the normal auxiliary feedwater demands not otherwise available during low power, hot standby, or hot shutdown conditions, thus minimizing the potential for feedline thermally induced cracking
- Providing about five minutes residence time at a higher temperature to facilitate the oxygen scavenging function of the hydrazine
- Providing, by accumulating corrosion products, a potential means for minimizing the transport of upstream corrosion products into the steam generators

The principal technical disadvantages are the structure, piping, and space required to locate the deaerator and large hold tank high in the turbine hall to accommodate the booster pump NPSH requirements and condensate system pressure.

In summary, the major technical features of deaerating heaters are:

- The deaerator effluent oxygen concentrations are likely to be in the 1–5 ppb range in a properly operated system throughout the load range, despite significantly high oxygen concentrations in the deaerator influent.
- If deaerator hold tank water is maintained in a deaerated condition during shutdown or hot standby by either steam or nitrogen blanketing or is vacuum deaerated, the feedwater oxygen levels can be maintained in the low ppb range (< 10 ppb) during startups.
- Copper compounds are found to be at concentrations of 2 ppb and less in the feedwater after the deaerating heater.
- The function of the deaerator is diminished considerably during those phases of operation where air and/or oxygen ingress is meticulously controlled to low values and the condenser deaeration of the condensate, drain, and makeup water is highly efficient.
- Because the deaerator location is usually near the downstream end of the condensate train, the first, second, and third heaters in the direction of flow are not protected from high oxygen levels in the condensate. Thus, there is a potential for the corrosion products formed at these points to be carried into the steam generators. This formation is mitigated by the presence of the deaerator storage tank, where solids tend to settle out in the low-velocity plenum.

In balance, deaerating heaters provide greater assurance of low oxygen transport into the steam generators and turbines in contrast to deaerating condensers and air-tight systems. However, where improved condenser deaeration and meticulous control of air/oxygen ingress throughout the load range is provided, the deaerator heaters are not likely to reduce feedwater oxygen concentrations to values below the 1–5 ppb range. During high power operation, there is evidence that the same range of oxygen concentration is achievable without deaerators, provided that sufficient attention is paid to limiting air ingress to the secondary system.

8.6 Control of Oxygen with Hydrazine

The use of hydrazine as an oxygen-scavenging agent in PWR secondary systems has, in general, followed the experience of fossil plants. Normal practices consist of injecting sufficient hydrazine downstream of the condensate pumps or condensate polishers to maintain a residual of about 10 ppb in the feedwater supplied to the steam generators. In recent years, consideration has been given to changing the injection point to other locations, such as the low-pressure turbine crossover lines or turbine exhaust hood at the top of the condenser. Theoretically, there are possible advantages in the use of the latter injection points, such as:

- A longer residence time in the system, allowing more time for the chemical reaction
- The likelihood of more uniform distribution
- Improved contact with the condensate as it forms on the condenser tubes
- A longer residence in the condensate because of the hotwell hold-up time

For the case of turbine crossover injection, the hydrazine will also be carried with the extraction steam into the low-pressure heater shells, providing similar benefits.

The turbine crossover injection point is between the moisture separator reheater (MSR) and the low-pressure turbines where time and pressure differences allow expansion and, through fluid movement, provide for homogeneous distribution throughout the condensate. The injection of hydrazine into the hood region would be through a spray arrangement above the condenser tube nest. The implementation of hydrazine injection at this point may be simpler because the spray system is already installed in some plant arrangements.

The effectiveness of hydrazine injection into either the crossover lines or the exhaust hood region depends on the reaction kinetics at the low temperatures encountered in these regions and on the total residence time in the condensate. It is estimated that between 5 and 10 minutes of additional residence time will result from injection at these locations, and, as will be noted later, this additional time may still be insufficient to provide improved oxygen scavenging. With either of these injection locations, there is also a potential concern regarding the effect on copper alloy condenser tube corrosion rates, due to high hydrazine and ammonia levels existing in the presence of dissolved oxygen [17]. Furthermore, for hydrazine injection points upstream of the condensate polishers, it should be noted that the hydrazine will be removed by deep bed polishers.

In order to assess the benefits of injecting hydrazine into the crossover lines, turbine exhaust hood, or similar locations upstream of the condensate pump discharge, the available published

information is reviewed in EPRI Report NP-3020 [4]. The applicable data included test results from two PWR plants, one fossil plant, and one laboratory study. Also included were test results on hydrogen scavenging in the condensate feedwater train that support the effectiveness of the hydrazine scavenging capability, especially in the higher temperature part of the transport path.

The data presented in Table 5-10 of EPRI Report NP-3020 [4] indicate that:

- The condensate and feedwater oxygen content in the plant tests was not significantly affected by injecting the hydrazine in either the low pressure turbine crossover or turbine exhaust hood, as compared to injecting it in the condensate pump discharge.
- Laboratory tests indicated that at temperatures less than 100°F (38°C), copper does not catalyze the hydrazine-oxygen reaction unless ammonia concentrations are more than one order of magnitude above those normal in PWR plants. Thus, oxygen scavenging is not expected to be effective in the condenser or initial feedwater heaters.
- Oxygen scavenging by hydrazine is effective at higher temperatures (200–300°F or 93–149°C) with ammonia concentration <500 ppb, and in the absence of copper alloy materials.

8.7 References

1. J. Harpster, B. Harpster, and F. Maner, "Turbine Exhaust Excess Back Pressure Reduction," presented at the FOMIS 38th Semiannual Conference, Optimizing Station Performance, Clearwater Beach, FL (June 7–10, 1999).

2. F. Maner and J. Harpster, "Performance Improvements Based on Measurement and Management of Air Inleak," presented at the EPRI Condenser Technology Conference, Charleston, SC (August 31–September 3, 1999).

3. "Operation and Maintenance of Steam Surface Condensers," *Fossil Plant News*, EPRI, Spring 1988.

4. *Evaluation and Improvement of PWR Secondary-System Oxygen Control Measures*. EPRI, Palo Alto, CA: July 1983. Report NP-3020.

5. R. S. Silver, "An Approach to a General Theory of Surface Condensers," *Proceedings of the Inst. of Mechanical Engineers*. Vol. 178, Pt 1, No. 14, pp.339–376 (1963).

6. W. J. Minkowycz and E. M. Sparrow, "Condensation Heat Transfer in the Presence of Non-condensibles, Interfacial Resistance, Superheating, Variable Properties and Diffusion," *Int. Journal of Heat Transfer*. Vol. 9, pp. 1125–1144 (1966).

7. Mike Tucci and R. J. Bell, "Returning the Craig Unit 3 Condenser to Leak Tight Operation," presented at the 8th. Annual Southwest Chemistry Conference, Steamboat Springs, CO (August 11–13, 1999).

8. C. L. Henderson and J. M. Marchello, "Film Condensation in the Presence of a Non-Condensible Gas," *Journal of Heat Transfer*. Vol. 91, pp.447–450 (August 1969).

9. *Perry's Chemical Engineer's Handbook.* McGraw-Hill 1963.

10. *Steam Generator Reference Book.* EPRI, Palo Alto, CA: 1994. Report TR-103824.

11. *Source Book for Limiting Exposures to Startup Oxidants.* EPRI, Palo Alto, CA: September 1999. Report TR-112967.

12. S. G. Sawochka, "A Cursory Overview of Oxidant Transport Control in PWR Secondary Cycles," presented to the EPRI Secondary Water Chemistry Guidelines Committee, October 1999.

13. *PWR Secondary Water Chemistry Guidelines, Revision 5.* EPRI, Palo Alto, CA: to be issued Winter 2000.

14. *Steam Plant Surface Condenser Leakage Study Update.* EPRI, Palo Alto, CA: May 1982. Report NP-2062.

15. *Guide to the Secondary Systems and Their Components to Minimize Oxygen-Induced Corrosion.* EPRI, Palo Alto, CA: March 1982. Report NP-2294, RP-S189-1.

16. R. Harrington, Editor, *Marine Engineering*. Society of Naval Architects and Marine Engineers. 1971 Edition.

17. Paul N. Garay. *Handbook of Individual Power and Steam Systems.* The Fairmont Press, Inc., GA 1995, pp. 289–292.

18. Gibson, "Minimizing Iron and Copper Deposition," *Proceedings of the American Power Conference,* p. 37, 1975.

9
INDICATORS OF DEGRADED SHELL SIDE PERFORMANCE

Two indicators that the condenser may not be performing in accordance with its design, given the present cooling water inlet temperature and flow rate, are that:

- The back pressure on the turbine has increased.
- The level of dissolved oxygen (DO) has increased.

The problem derived from high back pressure is that additional fuel is needed to produce design load or the heat rate has become too high requiring a decrease in steam generation. Another problem may be that the design load cannot be generated because the condenser back pressure has reached its allowable limit.

The problem derived from high DO is the need for additional water treatment and the increased chance for corrosion. The operator should also be continuously and closely monitoring other condenser performance indicators and evaluating whether they will contribute to the noted problems or lead to new fundamental changes in condenser behavior. Other indicating parameters that impact the shell side of the condenser include:

- Terminal temperature difference
- Changes in waterbox pressure drop
- Abrupt step change in outlet or return waterbox temperature profile
- Increase in condensate subcooling
- Measured increase in heat rate
- Measured air in-leakage

All of these parameters should be monitored, not only with regard to their association with one another, but also considering the operating limits where assigned. Since some of the above parameters are also affected by water side conditions, their effects on the shell side parameters are included in the following discussion.

9.1 Increased Back Pressure

Given the present cooling water inlet temperature and generated power level and assuming that the cooling water flow is close to the design value but allowed to change, an increase in condenser back pressure can be treated as an increased difficulty in being able to transfer the

latent heat in the exhaust vapor into the cooling water. From this viewpoint, the reduction in tube bundle heat transfer capacity can be due to:

- Fouling of the condenser tubes
- Excessive air in-leakage
- Decrease in air-removal rate
- Air binding in the waterbox

The rise in back pressure will also be associated with an increase in the terminal temperature difference (TTD), that is, the difference between the exhaust vapor and cooling water outlet temperatures. The amount of the increase, however, will depend on the cause of the rise in back pressure.

Figure 9-1 indicates that a high back pressure combined with a high TTD, a normal cooling water temperature rise (ΔT), and a normal dissolved oxygen level suggest that tube fouling is probably the problem. This figure is based on a paper by Katragadda et al. [1].

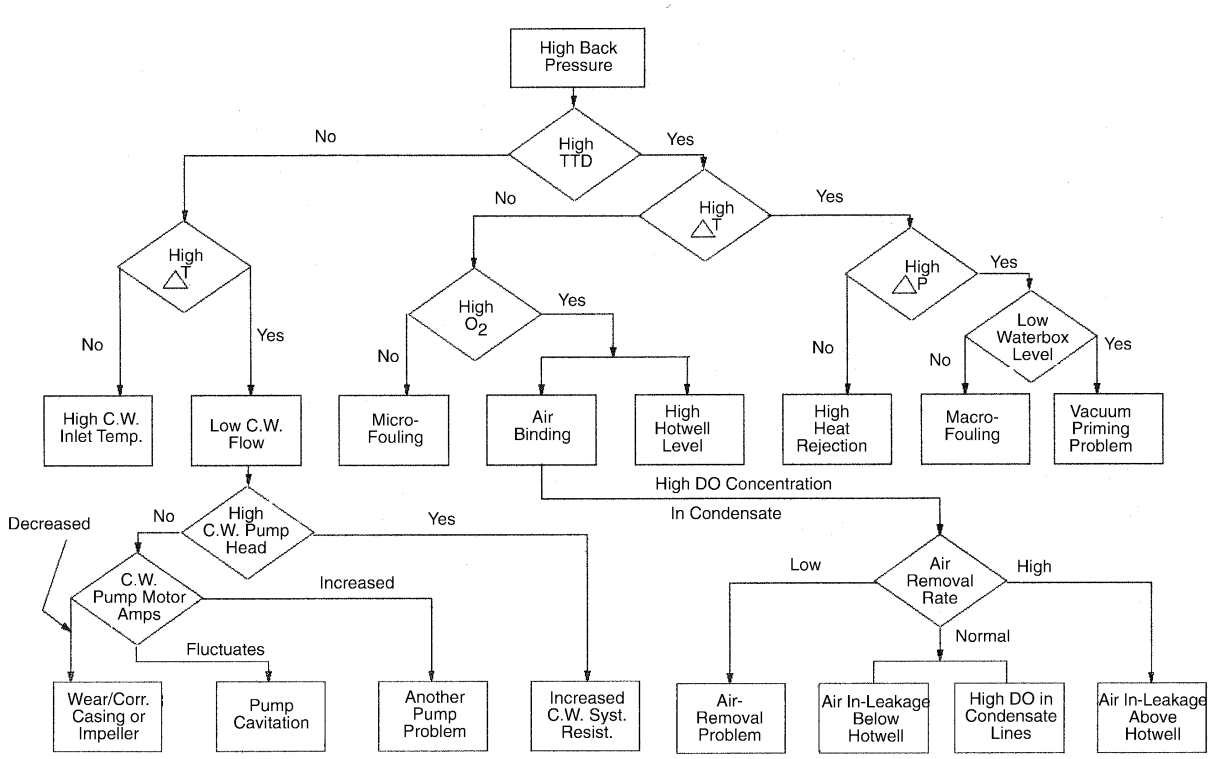

Figure 9-1
Condenser Diagnostics Flowchart

On the other hand, if the cooling water temperature difference, ΔT, has increased but the differential pressure across the condenser is normal, this indicates an increase in the actual amount of latent heat to be removed. In fossil plants, this would be expected because an increase in back pressure is almost invariably accompanied by a rise in the exhaust flow rate as well as end point enthalpy.

With the conditions being the same but a high water differential pressure now existing across the condenser, the high back pressure may be due to either tube fouling or a low waterbox level. The latter can affect the amount of tube surface area exposed to heat transfer as well as the water flow rate because priming problems resulting from a low waterbox level can also cause a broken siphon effect, which itself can affect the flow.

Following the logic diagram down to the DO decision block, a high DO concentration will indicate either a high hotwell level or air binding, the latter due to either an increase in air in-leakage or a reduction in air-removal rate. The latter will be confirmed by the off-gas flow measuring device (see Section 2.3 for proper selection). Alternatively, an increase in the DO concentration with the off-gas flow rate being normal would indicate air in-leakage below the hotwell condensate level or a source return line to the condenser with an abnormally high level of DO. However, if the off-gas flow rate were high, this would tend to indicate air in-leakage occurring above the hotwell level.

The left side of Figure 9-1 is more concerned with water side problems, and the logical consequences of the set of decision blocks shown in this part of the diagram are obvious.

9.1.1 Limits on Back Pressure Deviation

Back pressures lower than design tend to improve heat rate and are, therefore, to be sought. However, the back pressure should not be so low that it is the cause of unnecessary condensate subcooling (see the following subsection and Section 2). The upper limit on back pressure is given by the turbine manufacturer, typically in the 4.5 to 5.0 in. HgA (15.2 to 17 kPa) range.

9.2 Condensate Subcooling

Condensate subcooling or condensate depression is defined as the temperature difference between the turbine exhaust steam temperature at the condenser inlet and the hotwell temperature at the condensate outlet. This overall temperature difference is a consequence of the local tube surface steam condensation process and the specific design of the condenser. As can be seen from Figure 9-2, local condensate subcooling is inherent in the condensation process. Accepting the presence of a condensate film on the outer tube surfaces in accordance with Nusselt theory [2], there must be a temperature gradient between the vapor temperature and the temperature of the condensate at the tube surface in order for any heat to flow. Thus, the mean condensate temperature, even at the upper tube rows, must be less than the vapor temperature.

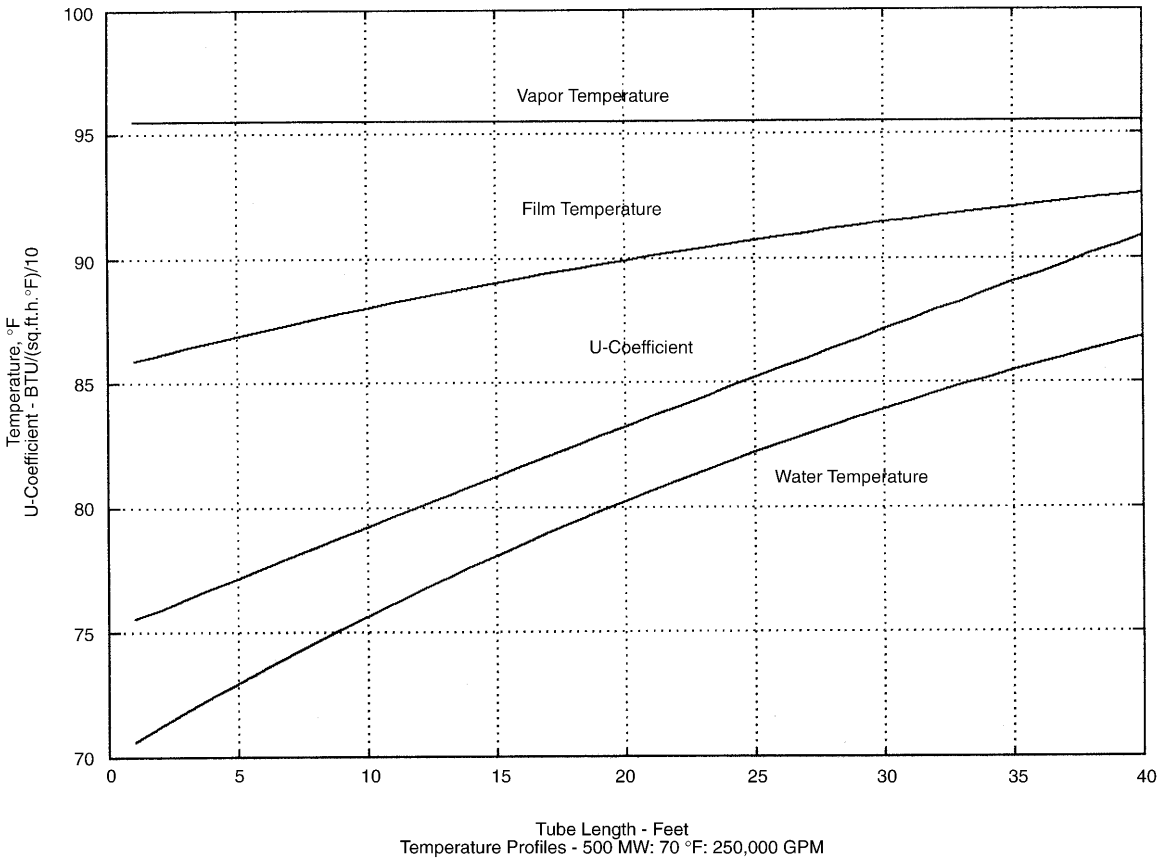

Figure 9-2
Temperature Profiles at Full Load Conditions
(Courtesy of Conco Consulting Corporation)

Kern [3] showed that the condensate mean temperature decreases from the top to the bottom of the tube bundle as the number of tube rows increases. This is the result of the water droplets cascading over tubes that have reduced steam condensation loading and are cooler. To offset this characteristic and minimize the degree of condensate subcooling, condenser designers incorporate features to direct steam flow through steam lanes and around the sides of the bundle to supply steam to the lower and inner rows of tubes. This steam also encounters the condensate droplets cascading from the upper tubes to provide some reheating of that condensate before it enters and mixes in the hotwell.

It has already been observed in Section 2 that subcooling is not only detrimental to unit heat rate but can also encourage an increase in dissolved oxygen concentration, the consequences of which on generator corrosion are discussed in Section 8.2.

Modern condenser specifications guarantee the dissolved oxygen concentration at the design point but not the associated degree of subcooling. It must also be recognized that subcooling is affected by cooling water inlet temperature and flow as well as unit load, as discussed in Section 8.3.

To establish whether there is an unnecessary amount of subcooling taking place, historical data taken during a period shortly after the condenser was cleaned should be analyzed to map the inherent relationship between subcooling, unit load, and cooling water inlet temperature. This map may then be used as a reference to determine whether unnecessary subcooling has become excessive and what steps should be taken to reduce it.

One on-line method that can be used to control subcooling on plants provided with closed cooling tower systems is to allow some of the circulating water flow to bypass the cooling tower itself. However, the range of control available during the winter months may be limited. Another approach which has been used is to deliberately inject a limited amount of nitrogen gas into the condenser shell. This will have the effect of raising the shell pressure and hotwell temperature without necessarily affecting the heat rate. Clearly, the trade-offs between minimum subcooling consistent with maintaining the desired condensate dissolved oxygen concentration have to be carefully balanced.

Attempts to adjust subcooling by varying the cooling water flow rate should be avoided because the lower tube velocity will not only increase the tube side film resistance but can also aggravate any tendency for silt deposition on the inner surfaces of the tubes.

9.2.1 Limits on Subcooling

It is clear from the above discussion that the normal degree of subcooling should be determined with a clean condenser with respect to both load and cooling water inlet temperature. However, since subcooling also affects the dissolved oxygen (DO) concentration (the limits for which on PWRs, BWRs, and fossil boilers were included in Section 8), the operation of the unit should be adjusted to maintain the DO content at the desired level. Otherwise, subcooling should be held at its natural level if an unnecessary increase in heat rate is to be avoided.

9.3 Increased Noncondensable or Off-Gas Flow

The off-gas flow rate is usually monitored and its normal value should be known. Increases in this flow are indicative of a rise in air ingress through leaks into those parts of the condenser/turbine system operating below atmospheric pressure. Stuffing box air in-leakage on LRVPs, however, will be measured in downstream off-gas flow devices. This has the effect of decreasing pump capacity for affecting air removal from the condenser. Defective nozzles or other worn components in SJAEs or improper motive steam conditions will degrade their capacity for air removal.

For a method to measure the capacity of these air-removal devices, the reader is directed to Section 2.3. Methods for locating such leaks are discussed in Section 11, while techniques for eliminating or reducing the leaks are reviewed in Sections 2 and 12.

It should also be noted that some noncondensables, especially ammonia, can originate from the thermal decomposition of chemicals added for steam generator feedwater treatment. Hydrazine is a chemical commonly used for this purpose and is sometimes injected into the steam passing through the crossover connection. Most of this steam flows from the LP stage exhaust directly

into the condenser so that hydrazine decomposition products report there in a comparatively short period of time.

As has been seen, a rise in the off-gas flow of noncondensables will tend to affect heat rate as well as back pressure, while even a small increase in the concentration of noncondensables within the tube bundle can have a severe effect on shell side heat transfer, as indicated in Figure 2-3 and Section 2.

9.3.1 Limits on Noncondensable or Off-Gas Flow

Ideally, the off-gas flow should be maintained close to its normal design value. Flow rates below this value could indicate some malfunction in the air-removal system, which should be checked. For instance, additional SJAEs or LRVPs may have to be brought into operation or a vacuum vent valve may not be operating correctly.

Flow rates in excess of the normal value can result only in a loss of condenser performance and should also be examined. An increase in air in-leakage could be the cause.

9.4 Dissolved Oxygen

An increase in off-gas flow due to a rise in air in-leakage is usually confirmed by a rise in the dissolved oxygen concentration in the condensate. However, the increased concentration may also be due to a reduction in air-removal capacity. Section 8 discussed the corrosion damage this can do to steam generators and feedwater heaters; steps have to be taken to curtail its effect.

Locating and eliminating the source of the air leakage is clearly a first step. If a change in air-removal system capacity has been judged to be the source of the problem, then the performance of this system should be analyzed and any fault corrected.

9.4.1 Limits on Dissolved Oxygen Concentration

See Section 8 for the limits assigned to various types of boilers.

9.5 References

1. G. Katragadda, J. T. Si, and P. Singh, “Fuzzy Inference Adviser for the Investigation of Condenser Performance Deficiencies,” *Proceedings of the International Joint ASME/EPRI Power Generation Conference (IJPGC)*, Denver, CO (1997). PWR-Vol. 32, Volume 2, pp. 307–311.

2. W. Nusselt, “Die Oberflaschenkondensation des Wasserdampfes,” *Zeitschrift des VDI*, Vol. 60, pp. 541–546, pp. 569–575 (1916).

3. D. Q. Kern, “Mathematical Development of Loading in Horizontal Condensers,” *AIChEJ*, Vol. 4, p. 157 (1958).

10
CAUSES OF DEGRADED SHELL SIDE PERFORMANCE

Section 9 outlined some of the principal indicators that condenser performance has been detrimentally affected by changes in the shell side conditions. This section examines in closer detail some of the possible causes for this change in behavior so that the responsible influences can be identified and the condenser brought back to proper operation as quickly as possible. The principal criteria that affect shell side performance can be summarized as:

- Excessive air in-leakage
- Condenser operating at off-design conditions
- Air-removal systems not performing as designed
- Inadequate air-removal system design
- Inadequate tube bundle design

10.1 Excessive Air In-Leakage

There is always some small residual amount of air in-leakage into the turbine/condenser system through labyrinth glands, penetrations, or other small apertures in those parts of the system that operate below atmospheric pressure. This air ingress cannot be avoided, and the design value used for the condenser tube heat transfer coefficient has to take this into account. It is when the air in-leakage rises above the threshold value that not only will the tube shell side heat transfer be affected, but an increase in the condensate dissolved oxygen concentration may also be observed. Of course, the latter may not occur if the increased concentration of noncondensables consists of ammonia or carbon dioxide as decomposition products from feedwater treatment chemicals.

The ASME Standard includes data regarding the maximum air loading that will still allow a condenser to perform at an acceptable level even with air ingress. Table 10-1 indicates only the acceptable upper limit on air loading below which fundamental condenser performance should not be affected. Assume a 500 MW unit with two condenser shells and a total exhaust flow rate of 2,300,000 lb/h (1,043,262 kg/h). Referring to Table 10-1, it will be noted that the upper gas load limit for this unit is 7.5 SCFM. There is no reference to the accompanying water vapor. This table is not concerned with establishing the design capacity for an air-removal system.

Some years ago, Westinghouse proposed a residual air in-leakage of 1 SCFM per 100 MW as being acceptable [1]. This should again be considered in terms of an upper acceptable limit that will not impact condenser performance. However, for the same 500 MW unit referred to above,

the limit would be 5 SCFM, which is lower than that recommended in the ASME Standard. These criteria are clearly important when considering whether excessive air in-leakage is affecting performance. but again, they are not related to the original equipment sizing.

Note that if the air leakage enters the system below the hotwell condensate level, it will have a more severe effect on dissolved oxygen concentration than if it is transported to the condenser with the exhaust steam or else enters the condenser through penetrations above the hotwell level.

Table 10-1
Noncondensable Gas Load (Air In-Leakage) Limits
(reprinted by courtesy of The America Society of Mechanical Engineers)

Number of Condenser Shells	Total Exhaust Steam Flow to Condenser in lb/h		Non-condensable Gas Load Limit (SCFM)
	Between	And	
One	0	100,000	1.0
One	100,000	250,000	2.0
One	250,000	500,000	2.5
One	500,000	1,000,000	3.0
One	1,000,000	2,000,000	3.75
One	2,000,000	3,000,000	4.5
One	3,000,000	4,000,000	5.0
Two	200,000	500,000	3.5
Two	500,000	1,000,000	4.0
Two	1,000,000	2,000,000	6.0
Two	2,000,000	4,000,000	7.5
Two	4,000,000	6,000,000	8.5
Two	6,000,000	8,000,000	10.0
Three	750,000	3,000,000	7.5
Three	3,000,000	6,000,000	9.0
Three	6,000,000	9,000,000	11.0
Three	9,000,000	12,000,000	13.0

Meanwhile, Section 11 outlines in detail the techniques available to locate the source of air in-leakage and should be referred to.

10.1.1 Air Entering Above the Hotwell Level

The oxygen in the air entering the shell side of the condenser above the hotwell level will dissolve in the condensate in accordance with Henry's Law. The Henry Law constant (H) for the solubility of oxygen in water was plotted in Figure 8-1 with reference to condensate temperature. The concentration of oxygen in the condensate (X_a mole fraction) can be calculated from the

partial pressure of the oxygen in the water vapor above the condensate surface (P_a atm) using Equation 8-1 repeated below:

$$X_a = P_a * H \qquad \textbf{Eq. 10-1}$$

Thus, this source of air affects the dissolved oxygen in the condensate as a function of the condensate temperature and the concentration of air in the exhaust vapor around the associated tubes. Because the air concentration tends to rise as vapor condenses, the partial pressure of the noncondensables will not be uniform but will vary throughout the tube bundle.

10.1.2 Air Entering Below the Hotwell Level

Air can enter the condenser subsystem through penetrations or welded seams that lie below the hotwell level, through piping that passes through the condenser below the hotwell condensate level, or through drains that enter the condenser below this level. Air contained in water with a temperature above that of the vapor in the condenser will tend to flash off and thus quickly become somewhat deaerated; but oxygen contained in liquids entering at lower temperatures must be heated before the natural dissolved oxygen equilibrium can become established. Without steam sparging occurring below the hotwell level, this warming process will be slow, and dissolved oxygen concentrations resulting from such sources of air ingress tend to be higher than in those sources entering above the hotwell level. The latter conform to the relationship of Equation 8-1, and their dissolved oxygen concentration is closely dependent on the partial pressure of air in the vapor in contact with surface of the condensate.

10.2 Condenser Operating at Off-Design Conditions

The monitoring of the current condenser cleanliness factor (CF) or performance factor (PF) and its comparison to the design value is an indication of a change in the heat transfer capacity of the condenser. However, Putman and Karg [2] have shown that, with cycling plants, the design cleanliness factor can vary with the load, and this should be taken into account when making the comparison and judging the present condition of the condenser. Of course, this change in CF can be due either to fouling or to an increase in air ingress. A sudden change in CF is more likely to be due to a change in air ingress rather than to fouling, which is usually a much slower process. But past operating experience and a study of recent historical data should enable a proper conclusion to be drawn.

In addition to the possibility of fouling or excessive air ingress, another reason for an apparent deterioration in condenser performance may be that the cooling water temperature has increased to the point where the condensation capacity has become constrained, a situation often experienced during the summer months. This temperature may be higher than that quoted in the original set of design conditions and should be compared.

Still another possibility for off-design performance may be that the unit is experiencing a reduction in the air-removal rate. This possibility is discussed in the next subsection.

In some cases, the plant may operate under partial steam loading. Under these conditions, the condenser will operate at a lower back pressure, and the suction pressure at the LRVP will also be lower. As can be seen from Figure 3-6 , the LRVP venting capacity will be reduced. In plants where partial steam load operation is anticipated, selection of an SJAE, or a hybrid system using a combined SJAE and LRVP should be considered to ensure maximum plant efficiency.

10.3 Inadequate Air-Removal System Performance

Section 3 discussed the performance characteristics of both steam jet air ejectors (SJAEs) and liquid ring vacuum pumps (LRVPs) and should be referred to. Clearly, care should be taken to ensure that the original equipment is, in fact, functioning as it was intended. It is possible that heat exchangers need to be thoroughly cleaned to restore their heat transfer capacity to the design parameters. In the case of SJAEs, the nozzles and diffusers have been known to experience wear, especially if the motive steam supply was not always dry. The nozzles may also have acquired a deposit on their inner surface, which can affect not only the flow but also the flow pattern.

10.3.1 Steam Jet Air Ejection Air-Removal Systems

There are at least seven possible causes of faulty operation of a steam jet air ejector as follows:

- **Insufficient cooling water**. An insufficient supply of cooling water can be determined by observing the temperature of the water entering and leaving the air ejector. If the temperature rise in the ejector intercondenser does not exceed the design condition, the cooling water supply is adequate, and the trouble is elsewhere.
- **Steam nozzles plugged with scale.** A scale deposit may form in the throats of the steam nozzles, consisting of chemicals used in the treatment of the boiler feedwater. When this occurs, the scale should be removed with drills of the same diameter as the nozzles.
- **Water flooding the intercondenser.** Flooding of the intercondenser with water can be caused by faulty drainage, which can usually be established by reading the temperature of the intercondenser shell.
- **Low steam pressure.** Low steam pressure may be due to clogging of the steam strainers or orifice plates with pipe scale or sediment, improper operation of the regulating valve, or the pressure of the steam supply to the pressure regulators being too low.
- **High back pressure at ejector discharge**. High back pressure at the discharge of the ejector sometimes occurs when it discharges into a common exhaust system together with other equipment. If this happens, it will be necessary to provide an independent discharge from the ejector to the atmosphere.
- **Loss of the water seal in intercondenser drain loop**. Loss of water in the drain loop takes place occasionally in installations where the vacuum in the system is subject to sudden fluctuations. A sight glass is recommended on the intercondenser drain loop to show whether the loop is properly sealed when the ejector is in service. This sight glass should be as near the bottom of the drain loop as possible. If the water is visible anywhere in the glass, the loop is properly sealed. However, if no water is visible or if it surges violently, the indications are that the drain loop has become unsealed. When this happens, some of the air removed from

the main condenser by the primary element is recirculated and flows back through the drain loop to the main condenser, thereby reducing the vacuum. To reestablish the seal in the drain loop, it is necessary only to close the valve in the drain loop line provided for this purpose; this valve usually is located close to the condenser. This valve must be closed for the short period of time required to form sufficient condensate and refill the loop. After the water again shows at the top of the gage glass, the valve should be opened very gradually. If the valve is opened too quickly, the difference in pressure will cause the water to surge and once more unseal the loop. In certain cases, some drain loops have a tendency to be unstable because of fluctuations in condenser vacuum. In such instances, some plants have operated with the valve in the drain loop line partly throttled, the opening being just enough to pass the condensate at all times.

- **Leakage through a closed air inlet valve in a dual-element SJAE**. Such a leakage establishes a recirculation flow between elements that reduces the overall efficiency of the SJAE. SJAE performance and condenser vacuum may be improved by switching elements if the other, previously open, air inlet valve, is found to be leaktight when closed.

It will be necessary to check for any one or more combinations of these conditions if trouble is experienced with the SJAEs.

10.3.2 Liquid Ring Vacuum Pump Air-Removal Systems

The performance characteristics of air-removal systems using liquid ring vacuum pumps were described in Section 3. The critical operating parameters were stated there, but it may be helpful to repeat some of the major parameters included in a checklist contained in the HEI Standard on LRVPs [3].

Checklist of Operating Variables

- Noncondensable flow rate through the pump.
- Inlet seal water temperature. A cooler seal water temperature will increase net capacity as well as lower the effective vapor pressure of the seal water, allowing the pump to achieve a higher vacuum.
- Seal water flow. Reduced seal water flow will result in an increase in temperature rise and a reduction in pump capacity, possibly resulting in increased condenser pressure.
- The inlet mixture temperature (that is, vapor subcooling)
- Pressure drop between pump inlet and condenser. Excessive pressure drop can be the result of restrictions between the vacuum pump and the condenser, causing the vacuum pump to operate at a higher vacuum than necessary.
- High back pressure at pump discharge. High back pressure at the discharge of the pump sometimes occurs when it discharges into a common exhaust system together with other equipment. If this happens, it will be necessary to provide an independent discharge from the pump to the atmosphere.

10.4 Inadequate Air-Removal System Design

As indicated earlier, the HEI *Standards for Steam Surface Condensers* [4] include guidelines for minimum recommended capacities of venting equipment. Air leakage values are tabulated based on lbs/h (kg/h) steam flow, number of condenser shells, and number of exhaust openings in the condenser shells.

Assume a 500 MW turbo-generator with a two-shell condenser, each shell with one exhaust opening. The total exhaust steam flow is 2,300,000 lbs/h (1,043,260 kg/h) at a condenser design pressure of 2.5 in. HgA (8.5 kPa) and with a cooling water inlet temperature of 90°F (32°C). Using the HEI method, the air-removal equipment would be sized as follows:

Steam flow per opening = 2,300,000 lbs/h (1,043,260 kg/h)/ 2 exhaust openings

= 1,150,000 lbs/h (521,630 kg/h)

Referring to HEI Table 9 B, for two condenser shells, a total of two exhaust openings, and a steam flow per opening of 1,150,000 lbs/h (521,630 kg/h), the design air leakage rate would be 30 SCFM or 135 lbs/h (61.2 kg/h)of dry air.

HEI Table 9 also indicates the corresponding amount of water vapor carried over with this air flow at 1.0 in. HgA (3.4 kPa) and 71.5°F (21.9°C), based on vapor subcooling of 7.5°F (4.2°C) in the condenser. For this example, the venting equipment would, therefore, have to handle 297 lbs/h (134.7 kg/h) of water vapor in addition to the 135 lbs/h (61.2 kg/h) of dry air.

It is sometimes the case that the margin included in the original design of the air-removal system was not adequate to allow for the subsequent changes in system behavior over time, for example, due to wear. The operating conditions may even have changed (for example. maximum cooling water temperatures may be higher than originally anticipated) or air ingress levels have become greater than allowed for in the original design. One result, perhaps, is that more units have to be operated in parallel than was originally intended.

Clearly, care should be taken to ensure that the original equipment is in fact functioning as it was intended. However, if the air-removal system equipment all seems to be in good working order, it is possible that a new appraisal must be made of the situation as it currently exists and the significant parameters recalculated; the results should be compared with the equipment as originally supplied. For example, the distance between the end of the nozzle and the inner surface of the diffuser in the mixing section is critical to obtain the expected mixture ejection rate so that this should also be checked against design documents.

The manufacturer may be able to advise whether some modification to the equipment will permit its performance to be improved. Or the analysis may point to the need for additional SJAEs, LRVPs, or possibly, the addition of precondensers.

10.5 Inadequate Tube Bundle Design

It is also possible that an insufficient amount of air or other noncondensable is being removed because of an inadequate tube bundle design. Perhaps a tendency for air binding has increased or insufficient laning was provided to allow the air to be concentrated around the air-removal section and so facilitate its evacuation by the ejectors or vacuum pumps.

The extent of the problem can sometimes be determined by measuring the water temperatures at several locations within the tube bundle, but a more positive determination can be obtained by conducting a comprehensive computational fluid dynamics (CFD) analysis. Such modeling incorporates the mechanical design details of the condenser itself, and they must be calibrated against data gathered while the condenser is operating under a known set of conditions.

Frisina and Carlucci [6] described a method for analyzing condenser performance, a method developed in the United Kingdom during the 80s. Rhodes and Bell [7] gave an example of the method in which the model is used and the quality of the predictions which can result. In the case discussed, the recommended condenser modifications consisted essentially of the removal of side baffles, so freeing up the side lanes and allowing the steam to pass around the nest and then flow in radially. They reported an encouraging improvement in condenser performance.

In a 1998 paper, Rhodes and Bell [8] gave more details of the information that can be obtained from CFD analysis, but it is not clear whether the results can always be productive. Tucci and Bell [9] outlined the analysis performed on a unit in Colorado with a very difficult air binding problem but came to the conclusion that there was no cost-effective solution in that particular case.

In summary, sophisticated mathematical modeling techniques are available to simulate the behavior of condensers; ascertain the distribution of velocities, pressures and temperatures throughout the tube bundle; as well as estimate the concentration of noncondensables within various areas of the condenser. The results of simulating changes to the structural design or configuration of the condenser can also be evaluated using such models.

10.6 References

1. *Air In-leakage Limits for Nuclear Turbines*. Westinghouse Turbine Division, Operation and Maintenance Memo No. 029, March 12, 1982.

2. Richard E. Putman and Dale C. Karg, "Monitoring Condenser Cleanliness Factor in Cycling Plants," *Proceedings of the International Joint ASME/EPRI Power Generation Conference (IJPGC)*, San Francisco, CA (July 1999). PWR-Vol.34, pp. 133–142.

3. *Performance Standard for Liquid Ring Vacuum Pumps, First Edition*. Heat Exchange Institute, Cleveland, OH: 1994.

4. *Standards for Steam Surface Condensers, Ninth Edition.* Heat Exchange Institute, Cleveland, OH.

5. *Performance Test Code for Steam Surface Condensers*. ASME, New York, NY. PTC.12.2-1998.

6. V. C. Frisina, L. N. Carlucci et al. "Advanced Predictive Performance Modelling for Condensers and Feedwater Heaters," *Proceedings of the EPRI Heat Rate Improvement Conference*, Knoxville, TN (September 1989) pp. 7B-37 to 7B-51.

7. Norman Rhodes and Robert J. Bell, "Improvement of Condenser Performance with Computer Modelling," *Proceedings of the EPRI Heat Rate Improvement Conference*, Baltimore, MD (May 1994).

8. Norman Rhodes and Robert J. Bell, "Condenser Configuration and Performance Analysis Using Computational Fluid Dynamics," *Proceedings of the International Joint ASME/EPRI Power Generation Conference (IJPGC)*, Baltimore, MD (August 1998), PWR-Vol. 33, pp. 459–471.

9. Mike Tucci and Robert J. Bell, "Returning the Craig Unit 3 Condenser to Leak Tight Operation," *Proceedings of the EPRI Condenser Technology Conference*, Charleston, SC (September 1999).

11
METHODS FOR LOCATING AIR IN-LEAKAGE

11.1 Introduction

As was outlined in previous sections, some of the indications that there may be a problem with air in-leakage into the shell side of the condenser may be inferred from the following:

- Increase in dissolved oxygen concentration in the condensate
- Rise in condenser back pressure
- Increase in the amount of air being removed with the off-gas
- Deterioration in the performance of the air-removal system

The logic diagram included in Section 9 (Figure 9-1) shows how the probability that an air leak has developed can be deduced from a number of condenser performance criteria, including the above. This section outlines the principal methods used to locate an air in-leakage, after its existence has been established. Much of this information is summarized in EPRI Report CS-6014 [1].

11.2 In-Leakage Detection Methods

The development of methods for detecting air in-leakage has followed very closely the evolution of the techniques for locating the source of water in-leakage, as outlined in Section 6. Foam, smoke, and various audio methods were the early techniques used, but these generally experienced uncertainty problems similar to those also discussed in Section 6, with reference to the location of sites of water in-leakage.

The state-of-the-art method for locating the source of air in-leakage is the tracer gas method, using either sulfur hexafluoride (SF_6) or helium. The use of the tracer gas technique has eliminated much of the guess work normally experienced when using less sophisticated methods. It has resulted in less downtime to perform leak detection and has especially helped to reduce the increase in heat rate brought on by excess condenser back pressure associated with an air in-leakage that is greater than the capacity of the air-removal system.

Air in-leakage testing is done by drawing a sample of the condenser off-gas while releasing the tracer gas on those areas within the vacuum boundary where leaks are suspected to have occurred. Because the condenser is under vacuum, the tracer gas migrates into the condenser shell, from which it is removed by the air-removal system, together with any other noncondensables present. A leak is identified when an off-gas sample containing the tracer gas

passes through a mass spectrometer (for example, fluortracer analyzer) and displays a trace similar to that shown in Figure 6-10.

The analyzer, tracer gas release package, and sampling equipment were described in Section 6. The communication arrangements used are similar to those used with water in-leakage detection; a strip chart recorder is a central feature of this detection method also.

Another tool for locating the source of in-leakage is the multisensor probe (MSP) instrument described in Section 2. This instrument, with its sensor located in the exhauster vacuum line, has the ability to measure the precise amount of air in-leakage finding its way into the condenser. At the same time, the instrument also measures the exhauster capacity, which in itself would indicate whether it is responsible for the excess back pressure. With a sensor in each air-removal line leaving the condenser, the search field for using the tracer gas can be reduced to the number of lines monitored because any leak into a condenser section will be largely removed by its air-removal section. As a further benefit, leaks can be measured with this instrument below the level that affects the condenser back pressure in a threshold region that is below the level at which costs are affected by the heat rate increase. For example, air in-leakage could be maintained at between 1/3 and 3/4 the exhauster capacity.

Finally, the in-leak instrument provides high-resolution in-leak detection to 0.1 scfm, with 0.5 scfm discernable from normal background noise. The instrument can be used to monitor air in-leakage while applying temporary fixes to suspect areas. The response time is 30 seconds to 3 minutes after application of a fix to a leak area. Some common fixes include the application of duct tape, plastic wrap, and putty. The instrument has started a search for new temporary leak-stopping methods [2]. A benefit of this method is that the precise magnitude of the leak is determined by the instrument.

11.3 Air In-Leakage Testing

The successful use of tracer gas leak detection in a power plant is an acquired skill. It can be explained, but it must be practiced to achieve mastery. At its simplest level, a tracer gas is released during the leak search, and a signal is displayed when the gas is detected. There are, however, techniques in the gas release and signal interpretation that require experience and careful attention to detail.

In a laboratory setting, it is possible to test and segregate one component at a time, with a leak or no-leak determination made according to the presence or absence of a signal. However, in the plant environment, multiple leakage paths can exist in close proximity, with no possibility of creating a gas barrier between them. This requires that a method be used to isolate a specific leak from neighboring leaks and to recognize signals caused by the gas crossover that can occur while testing components near the leak.

11.3.1 Application

The example in Figure 11-1 to explain this method is a potential leak on a turbine shaft gland seal assembly, perhaps the most frequent type of leak experienced on a steam turbine unit. Possible leakage locations include:

A. The turbine shaft and labyrinth seal

B. The seal housing joints between the upper and lower cases. [Both sides]

C. The mating joint between the seal assembly and the turbine hood [Circumference]

D. The joints between the upper and lower turbine casings

E. The two points at which B, C, and D intersect

F. Jacking bolt holes on the turbine upper to lower case joints

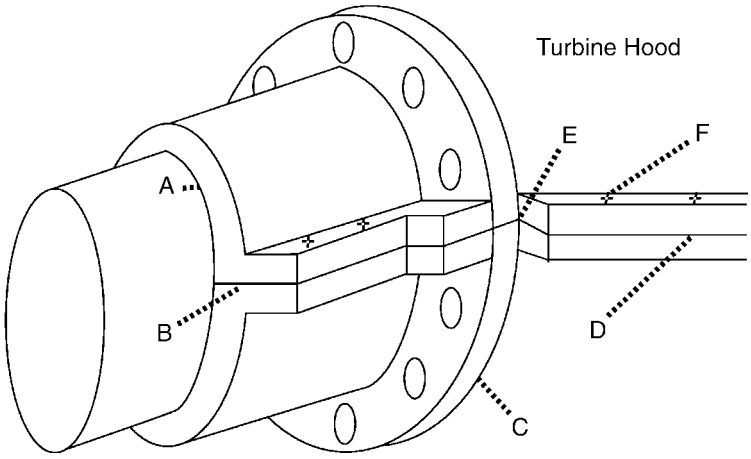

Figure 11-1
Turbine Shaft Gland Seal Housing

In a typical air in-leakage test, tracer gas is released in the gland seal housing area in a six-second burst to determine if any of the paths are leaking. If the tracer gas is detected, the process of differentiating between leakage paths (isolating) begins.

Three things enable the identification of a specific leak

1. An attempt is made to direct the release of the gas in such a way that only one item is “shot” at a time. This is done by releasing gas at the outermost items first, while directing the gas away from the other components. In this example, either side of the turbine case joint is a “shot”; care would be taken to direct the gas release out and away from the shaft seal assembly. A quick burst, three seconds or less, is all that is required. With the release, a verbal “On” message is relayed simultaneously to the detector operator, followed by the name of the item or component being shot.

2. The time between gas release and the signal response (response time) is noted by the detector operator who, upon hearing the "On" message, taps the event marker switch on the strip chart recorder to measure the elapsed time between the message and the first sign of a signal response.

3. Signal characteristics, such as peak magnitude, rate of rise of the signal (slope), elapsed time for the signal clearout, and peak width, are all significant.

   The operator observes the incoming signal and records the peak value (magnitude) of the indication, together with the name of the item shot, paying attention to the slope traced by the signal rise. Upon clearout of the gas (the signal indication returns to background), this process is repeated for the remaining components.

Signal interpretation of indications for components in close proximity requires that consideration be given to the following (prioritized) items (See Figure 6-10):

1. Signal magnitude

2. Signal response time

3. Rising slope of the signal response

4. Clearing time of signal response

Interpretation of the data should proceed as follows:

1. After shots have been made and recorded for each of the possible paths, one indication may stand out above the others. Clearly, if one of the signals has a magnitude that is substantially greater than any of the others, it is probably the leak being sought.

2. When two adjacent test areas show peaks of equal or near-equal magnitude, the one with the shorter response time is usually associated with the leak location.

3. Steepness of slope relates to how quickly the gas was drawn into the leak. Thus, if magnitudes and response times of two or more shots are equal, a steeper slope of rise (that is, a shorter elapsed time between the onset of the signal and the signal peak) will indicate which is the leak or the more significant leak if several leaks exist.

4. Alternatively, if differences are still indiscernible, observing the clearout times (elapsed time from the signal peak to a return to background) for each indication can be helpful. For indications of equal magnitude, a faster clearout would imply the shot location is closer to the leak.

   Although application of these last two tests may sound difficult, they can be performed quite easily. The strip chart can be displayed in such a way that all of the signals for the assembly can be seen; and if magnitudes and responses are equal, the signal with the narrowest peak-width (signal start to signal finish) tends to represent the actual leak.

5. Finally, determination is made whether there is more than one leak on the assembly. Signals, from tests associated with nonadjacent items, both having large magnitudes and quick response times, indicate that there are multiple leaks.

11.3.2 Selecting the Tracer Gas To Be Used To Locate Air In-Leakage

The selection of tracer gas depends on many utility-specific factors including test equipment on hand, training of the staff, plant conditions, and time available.

Based on their experience, one contractor in the industry has created the following guideline to determine which tracer gas to use:

- **Unit air in-leakage**. If the unit has greater than 10 SCFM of air in-leakage, either helium or SF_6 may be used as the tracer gas. If the unit has less than 10 SCFM, then the use of SF_6 is recommended due to its greater sensitivity (one part SF_6 per billion parts of analyzed gas) as compared to helium (one part per million above helium background of ~5 ppm).
- **Dissolved oxygen.** Due to its negligible solubility in water, it is recommended that the search for the cause of DO leakage below the steam space use SF_6 as the tracer gas. This does not preclude using helium when SF_6 is not available.
- **Unit turbine power**. If the unit has 20% or greater turbine power, either tracer gas may be used. If the unit has no power, it is recommended that helium be used due to its lower sensitivity than SF_6. This does not preclude the use of SF_6 but, when used, care should be taken to ensure that the SF_6 dilution rate is increased to bring the sensitivity levels down to that of helium.
- **Unit size.** All units may be inspected with either helium or SF_6 as the tracer gas.

11.3.3 Installation of Test Equipment

Although the test equipment can be installed in either a permanent or temporary configuration, temporary installations allow portability of the test equipment, which permits leak tests to be performed on multiple units or on other components not associated with the main condenser.

11.3.4 Determination of Test Shot Injection Point

A test shot is a tracer gas injection into the condenser upon completion of the test equipment start-up procedure but before the start of the actual leak survey. The purpose of a test shot is:

- To verify that the test equipment is installed and operating correctly
- To verify that the sample probe obtains a valid sample
- To establish the baseline response time against which all the subsequent readings will be compared

The location of the injection point must be readily accessible because test shots are an integral part of leak testing. The injection point should be valved directly into the condenser, rather than

through a component such as a feedwater heater. In most cases, this results in response times that fall within the recommended 30–45 seconds range.

Penetrations into the condenser neck put the tracer gas at the edge of the steam flow, which results in moderate response times that are more representative of condenser shell leaks. While available points on the turbine are farther away from the condenser air-removal section, the high steam flows inherent with these injection points carry the tracer gas directly to the air-removal section, resulting in extremely fast response times.

11.3.5 Test Shot Injection Point Installation

The test shot injection point should consist of a variable rate flow meter (recommended 0 to 30 lpm range) connected to a valved penetration on the condenser shell. The flow meter will require calibration for the density of the tracer gas used in testing.

11.4 Order of Search

The following recommendations apply to an overall air in-leakage search, which should start on the turbine deck at one end of the unit, usually beginning at the rupture disk, continue around the turbines, include any other components on that deck applicable to the test, and then proceed in a similar manner with the next deck down. Regardless of the type of the gas test, the test itself should run top to bottom, one deck at a time.

Whether the test gas is lighter or heavier than air is not a significant factor in determining whether tests should progress from the top down or bottom up with a unit survey. Heat convection in combination with normal building ventilation flows usually results in large, upward air mass flows that more than compensate for any test gas specific gravity considerations

By beginning the test on the upper elevations, the probability of confusion caused by the tracer gas drifting to unknown leak locations is reduced. Typically, tracer gas released some distance under a large leak results in a signal response that is slow to occur (response time), slow to peak (slope), and slow to clear out. For example, this effect would be evident on a shot in the area below a large condenser expansion joint leak.

The narrow spaces between most condensers and their supporting walls tend to act as a “chimney,” sweeping air toward the condenser and then up to the higher elevations. For this reason, testing on the next level below the turbine deck should begin on those components closest to and highest up on the condenser unit. For example, on the mezzanine deck, the gas releases should begin at one end of the unit up by the expansion joint, and progress down the slope of the condenser neck, taking in the various penetrations. After this area has been shot, testing can proceed outward from that end of the condenser, taking in components such as feedwater heaters, etc. By adhering to this order of testing, confusion is avoided if gas released at components out and away from the condenser is swept toward the condenser and drawn into leaks on the shell. After all components at one end have been tested, the technician moves around to the side of the condenser and continues in the same manner.

With the sensitivity of the detectors available today, large leaks (10 SCFM or more) will begin to give indications while testing other components many feet away from the actual site of the leak. Every shot made in the area will show some response. If such is the case, one course of action would be to mentally divide the area into sections, and "hose down" each section individually with an extended gas release (up to 30 seconds). Decreasing response times and increasing magnitudes of the section signal will indicate the direction in which to continue. The presence of a large leak may override or "mask" the signal of smaller leaks in the area, requiring a repair before leak searching can continue in that area.

In order to isolate a leak, it is important for the technician to know where he has been and what he has seen. This is why it is important to keep a log of everything that is sprayed with the tracer gas. If a large leak is found on the manway on the west side of the turbine, an indication of this must be made on the strip chart recorder, Otherwise, when on the west side of the condenser spraying a penetration into the condenser on the mezzanine level, there could very well be an indication of leakage that does not, in fact, exist. Also, when on the mezzanine level, spraying of the tracer gas should start at the condenser and then work outward along the hood, expansion joints, etc.

Technicians can waste a lot of inspection time searching for a leak that they have already found. This can be avoided by ensuring that the response time compares favorably with the typical response time originally recorded during the test shot.

Following these suggestions and performing an orderly, systematic, and detailed search pattern will greatly assist leak detection personnel in the successful application of the gaseous leak detection technique.

11.4.1 Quantifying Air In-Leakage

To attempt to quantify every leak may not be cost effective. However, there are various methods to determine the relative size of existing leak paths. Both SF_6 and helium analyzers give readouts, one in millivolts, the other in divisions. Plant personnel can determine a plan of action to repair the leaks by comparing either the millivolt readout or the division readout. In addition, mechanical and electronic instrumentation that measure total air in-leakage are described in Section 2.

What should be of most concern is the exact location of the leak and the subsequent repair and retest of it because a leak detection program must be followed up with a repair program.

11.4.2 Performing Tube Leakage or Air In-Leakage Inspections When Turbine Is Not Under Power

The primary reason to avoid performing inspections when a turbine is not under power is the very likely possibility that the background concentration of the tracer gas will become so high that it eliminates any chance of isolating a leak. Both air in-leakage and condenser tube leakage inspections require vapor flow to carry the tracer gas out of the condenser with the rest of the noncondensables. If sprayed tracer gas is sucked into the condenser, it will begin to accumulate

and the background concentration will rise and even saturate the detectors. There are, of course, certain occasions when the unit is shut down that the station has no other choice but to attempt a tracer gas inspection in an effort to bring the unit back up, and they have often been successful in doing so. However, a minimum 20% turbine power is recommended when performing a tracer gas inspection.

11.5 Air In-Leakage Checklist

A plant-specific checklist of the components requiring inspection during an air in-leakage test must be included in the test procedure. This section details the method for compiling a checklist. Meanwhile, a typical checklist for use by the plant is shown in Appendix D. A well-constructed air in-leakage checklist will:

- Ensure that all components that may contribute to condenser air in-leakage are inspected during the test
- Facilitate testing by detailing the equipment in the order in which the testing will be performed
- Include simplified equipment drawings that will aid in recording the leak locations

To create an initial draft of the checklist, an operator familiar with the on-line operation of the unit and a leak-test technician should perform a review of the drawings and flow diagrams to establish the inspection boundaries. This then serves as the basis for a "walkdown" of the unit, during which the systems and components that will require testing for leaks will be itemized.

This walkdown inspection should start at one end of the turbine deck, continue around the turbine unit, and then proceed in a similar manner for each elevation, thus simulating the proposed testing order. By referring to the piping installation diagrams and the equipment operating procedures, the operator will be able to define the vacuum-boundary locations for the components, and these will be the points at which the testing will stop for that elevation. The vacuum boundaries for each component should be marked on the system piping installation diagrams for later reference. As a minimum, the checklist walkdown draft should contain information on all items in the following outline, assuming that the equipment listed below is present on the unit in question. Clearly, when in doubt as to whether a particular item lies within the vacuum boundary, there is nothing to be lost by "shooting" that item with the tracer gas.

11.5.1 Typical Air In-Leakage Items

I. Turbine Deck

A. Low-pressure turbines

1. Gland seals and housing flanges
2. Turbine case flanges
3. Rupture disks
4. Manways
5. Steam crossover lines
   a. Expansion joints
   b. Turbine penetrations
6. Turbine penetrations under the turbine skirt
   a. Hood spray penetrations
   b. Sensor penetrations
   c. Miscellaneous valves, lines, etc.

B. Moisture separator reheaters

1. Vent and drain lines routed to the condenser

C. Boiler feed pumps (if installed on turbine deck)

1. Motor or main turbine driven
   a. Shaft seals (if seal water system returns to condenser)
2. Steam turbine driven
   a. Gland seals and housing flanges
      1. Inboard seal
      2. Outboard seal
   b. Turbine case flanges
   c. Rupture disks
   d. Steam stop valve drains and case penetrations
   e. Exhaust duct isolation valve
   f. Exhaust duct expansion joints

II. Mezzanine Level

Most turbine/condenser units are constructed in either a three- or four-deck configuration. For the purpose of this equipment outline, a three-deck configuration was assumed.

A. Turbine to condenser expansion joints

B. Steam bypass lines and penetrations

C. Air-removal lines

1. Line penetrations
2. Isolation valves
3. Condenser vacuum breakers

D. Feedwater heaters

1. Condenser neck mounted

a. Penetration expansion joints

2. Floor mounted
   a. Extraction steam lines
      1. Stainless steel expansion joints
      2. Weld joints
   b. Heater shell penetrations
   c. Relief valves
   d. Drains

Note: Items listed concern low-pressure heaters, but the vacuum boundaries for all feedwater heaters will vary with the turbine power loading. Thus, the vacuum boundaries for several load conditions (start-up, low power, and full load) should also be recorded.

E. Condenser manways and penetrations
F. Upper sections of condenser waterbox tubesheet flanges
G. Main steam stop-valve drains
   1. Before seat drains
   2. After seat drains
H. Heater drain tanks (Flash tanks)
   1. All penetrations and lines
I. Seal steam condensers
   1. Loop seals and loop seal drains

III. Grade Level (Basement)

A. Condenser penetrations (The penetration weld proper and along the line away from the condenser to where vacuum conditions no longer exist.)
   1. Steam dumps
   2. Condensate make-up lines
   3. Drain headers
B. Waterbox tube sheet flanges
C. Hotwell penetrations
   1. Sightglasses
   2. Level transmitters
   3. Condensate lines
D. Condenser supports
E. Heater drain pumps
F. Condensate pumps
   1. Pump suction strainer housing
      a. Pump suction strainer housing drain
   2. Pump expansion joint
   3. Pump inlet flange
   4. Pump floor-mount flange
   5. Pump shaft seal
   6. Pump-housing penetrations

Note: If air-removal lines are installed on the pump housing or pump case, the valves on these lines should be opened during the test.

G. Air-removal equipment
   1. Steam jet air ejectors
      a. Flange and threaded connections
      b. Inter-condenser penetrations
      c. Condensate drain seal
      d. Isolation valves
      e. Drains
   2. Mechanical vacuum pumps
      a. Flanged and threaded connections
      b. Shaft seals
      c Air jets
      d Isolation valves
      e. Cylinder head (piston type)

Note: Many air-removal configurations incorporate air-assisted jets to accelerate the off-gas flow to the vacuum pumps. These jets pull in large volumes of ambient air, which is funneled into the off-gas stream. These jets must be valved out when performing the leak test because the large volume of the assisting air ~100 SCFM dilutes the tracer-gas concentration in the off-gas.

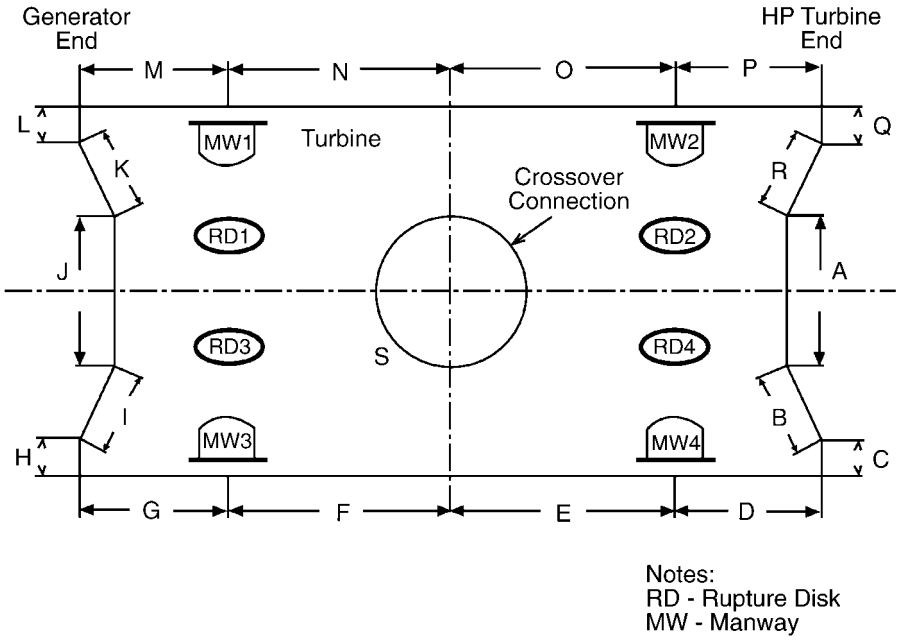

Figure 11-2
Map of LP Turbine #1

Upon completion of the walkdown, the next step is to sketch simplified drawings of the turbine and condenser penetration locations that will serve as maps during the test. Figures 11-2 through 11-4 are examples of similar maps used by Virginia Power at the North Anna Station [3].

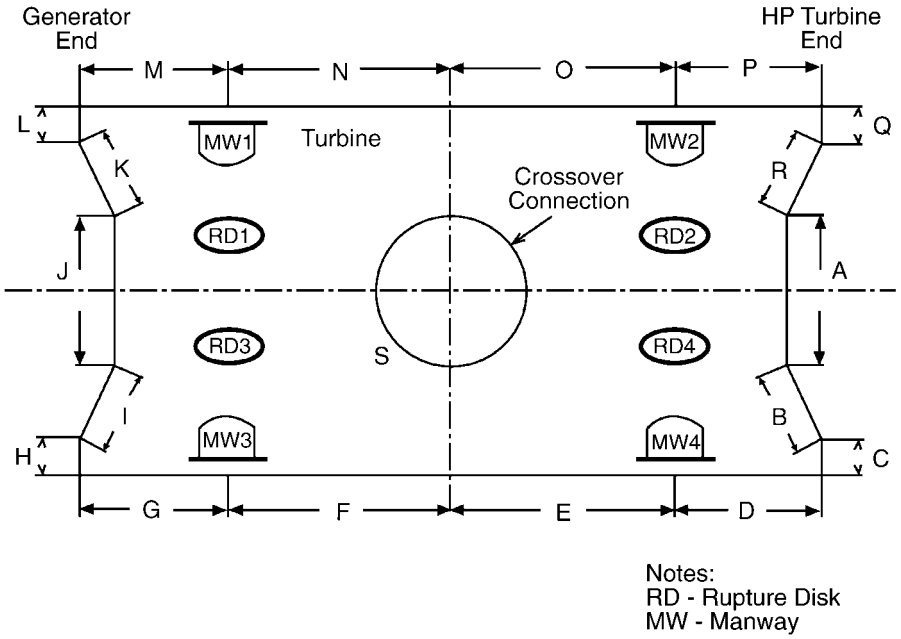

Figure 11-3
Map of LP Turbine #2

A drawing should be made for each low-pressure turbine and for each exposed condenser section. Penetration numbering should follow the sequence of the testing order. Details such as the “Plant North” orientation and penetration numbers cross-referenced to piping installation diagrams should be included.

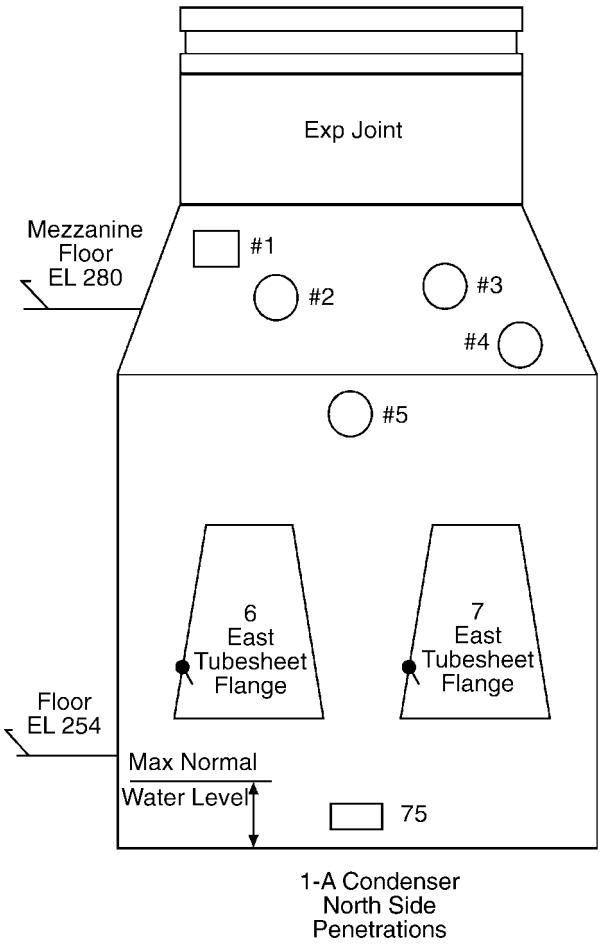

Figure 11-4
Condenser Penetration Map

It is **not** recommended that complete installation diagrams be included in the checklist. Due to their large size and complexity, they do not readily facilitate testing. Instead, the relevant drawings should be extracted from the larger diagrams and reduced to a size convenient for inclusion in the checklist document.

The draft checklist should then be rewritten into a format that allows recording of the information gathered during the air in-leakage test (see Appendix D).

Finally, the completed checklist should again be “walked” through the unit to verify that it details the required equipment checks in the order in which the test will be performed.

Appendix D shows an example of an air in-leakage checklist for the turbine deck. This example covers the turbine deck because of the generic nature of the components found on this level. The completed checklist for a station should continue to include each additional level. A similar checklist for each generating station should be created based on this model.

11.6 Off-Line Air In-Leakage Testing

Optimum conditions for gaseous tracer leak detection of surface condensers require that as a minimum, the unit be on-line at ~20% turbine loading. This section details a testing method that can be used when condenser air in-leakage rates are so excessive that the unit cannot be maintained on-line.

11.6.1 Steam Flow

The process of condensing steam creates a partial vacuum in the condenser. Noncondensables, mostly air from in-leakage, are removed by pumps. Typically, the inlets for these pumps are located near the air-removal section of the tubesheet, close to the bottom of the condenser and just above the hotwell. The downward flow of steam from the turbine exhaust propels the noncondensables toward the air-removal inlet, concentrating them in this area until they can be removed.

When the unit is off-line, the absence of this steam flow allows noncondensables to spread to all areas of the condenser. Movement of the flow of this air mass is then only a gradual migration from the in-leakage points to the air-removal inlet. Additionally, the air-removal equipment will be operating at reduced efficiency because the air is no longer being concentrated at the inlet.

For these reasons, attempts to perform condenser air in-leakage testing with the unit off-line generally meet with failure. With no steam to hasten the removal of the tracer gas (itself a noncondensable), the signal response time will be slow, the signal will take several minutes to peak, and it will require many more minutes to clear out. Nor will performance of an air in-leakage test with steam in a bypass mode provide satisfactory results. Typically, bypass steam dumps into one side of a condenser section at an elevation lower than the uppermost condenser tubes. Steam entering at such a location does not provide the same “condenser sweeping” action that the turbine exhaust does.

11.6.2 Off-Line Testing for Air In-Leakage

Thus, the only instance in which off-line gaseous tracer air in-leakage testing should be attempted is when high in-leakage rates prevent the unit from being brought on-line. Depending on the size of the condenser and the installed air-removal equipment, this would be an in-leakage rate of 80 SCFM or more. Two differences from the normal test conditions make this test feasible:

- The large volume of air leaking into the condenser creates an acceptable flow of noncondensables to the air-removal area within the condenser.
- The test goal is reduced to just locating the large leak or leaks that are preventing the unit from being brought on-line. Once found and corrected, the unit is put on-line and normal testing can continue.

The test equipment setup for off-line testing remains as before. In addition to the test equipment, the condenser vacuum pump and gland seal steam systems must be in operation. The absence of seal steam to the shaft glands can cause condenser air in-leakage rates to increase by hundreds of cubic feet (cubic meters) per minute.

Small condenser leaks may not show any indication due to the dilution caused by the great volume of air entering the condenser through the large leak. However, when the tracer gas is released in proximity to the large leak, more of the tracer gas will be drawn into the condenser, thereby helping to offset the dilution.

When the leak indication is identified, the leak isolation process continues in the manner of the on-line test by releasing the gas in smaller search areas until the leak is isolated.

11.7 References

1. *Condenser Leak-Detection Guidelines Using Sulphur Hexafluoride as a Tracer Gas*. EPRI, Palo Alto, CA: September 1988. Report CS-6014.

2. J. Harpster, to be published

3. “Secondary Plant Air In-leakage Inspection Procedure,” Virginia Power, North Anna Power Station, Unit #2, March 1986.

12
METHODS OF CORRECTING AIR IN-LEAKAGE

When the source of an air in-leakage has been located, it should be corrected. However, good judgement has to be exercised when determining how to conduct the repair and how permanent to make it at that time. Much will depend on the severity of the leak; but, if the leak can be reduced to an acceptable level without taking the unit out of service, this may be more important to plant management than providing a more permanent solution immediately, allowing this to be delayed until a future planned outage.

Methods for correcting the air in-leakage will, of course, depend on the nature and location of the leak, but Gayley [1] suggests that these methods fall into four major categories:

- Piping repair or replacement
- Sealants
- Component repair and/or replacement
- Packing adjustment

12.1 Piping Repair or Replacement

Good pipefitting practice will determine how to repair or replace piping or pipe fittings through which air is leaking into those areas of the condenser and turbine system that operate under sub-atmospheric pressures. In the case of leaks detected in any piping that lies within the waterbox, since the unit must have been taken out of service before these could be identified, such pipes should be corrected or replaced before the unit is brought back on-line. However, leaks found in those pipes that have easy external access, for example, those located outside the water box, may be corrected or replaced in accordance with good practice, often with the unit remaining in operation.

Good pipefitting practice also applies when correcting penetrations through which air is leaking. Many of these incorporate pipe fittings right at the penetration or else leaks have developed in welds around the penetration, and these can often be corrected while the unit remains in operation.

12.2 Sealants

Many commercial sealants are available to the utility industry for correcting sources of air in-leakage; the selection often depends on the manner in which they have to be applied, their viscosity during application, and the temperature conditions under which they eventually have to

operate. It is important that materials that retain their flexibility at ambient temperatures and that they do not harden and become brittle when their temperature is raised. In this respect, the use of sealants made from silicone-based materials is to be preferred.

Since many of the areas in a condenser that are prone to air in-leakage operate at below-atmospheric pressure, sealants applied at the surface tend to be drawn into the leaking aperture or crevice, so long as their viscosity remains low. Such sealants can be applied successfully to the exposed interfaces between stationary components such as pipe or valve flanges.

12.3 Component Repair and/or Replacement

Good engineering practice will determine how leaks in condenser or turbine components should be repaired. With small cracks, the use of sealants may be considered. Welding or brazing of the component may also be a possibility and can often be performed while the unit is still on-line. However, if parts have to be removed for machining, if there is a need to manufacture new parts in the maintenance shop, or if a replacement component supplied by the manufacturer must be mounted in place, it is possible that the unit will need to be taken out of service temporarily while the work is performed.

Occasionally, a leaking condenser boot needs to be replaced. This invariably requires lead time for ordering and the activity should be planned for a future unit outage.

In some plants, it has been found that, while some turbine labyrinth seals may appear to be tight when tested with the unit shut down, they seem to leak when the unit is later brought back on line and returns to operating under normal temperature conditions. It is possible that the internal surfaces of such seals may have become worn, and their condition should be carefully examined during the next outage with a view to possible adjustment or replacement.

12.4 Packing Adjustment

Leaking packings on valves or the seals on rotating shafts of small equipment may often be replaced without shutting the unit down. This is especially true if redundant backup equipment can be brought into operation, so allowing the faulty equipment to be taken out of service temporarily for repair without affecting the operation of the unit.

Adjusting the packing or gaskets between more major components is difficult to perform on-line, unless the application of a sealant at the interface can provide the solution.

Otherwise, the replacement of packings or gaskets between machined surfaces usually requires that the bolts be removed before the packing can be replaced and normally involves the unit being taken out of service.

12.5 References

1. Roger B. Gayley, “Condenser In-leakage Reduction,” Lecture to EPRI Condenser Technology Seminar, Charleston, SC (August 30–31, 1999).

A
GLOSSARY

General Terms

boiler. The component that produces the main steam supply, such as the steam generator in a PWR, the reactor in a BWR, or the boiler in a fossil plant.

boiling water reactor (BWR). In this form of nuclear steam generator, the heat from the nuclear reaction is used to heat the water surrounding the fuel rods. However, it is the vapor generated within the reactor vessel under pressure that is supplied to the throttle of the steam turbine. This steam can contain irradiated material.

figures of merit. The criteria generated from eddy current test data that allow the condition of tube walls to be quantified and compared.

pressurized water reactor (PWR). The form of a nuclear steam generator in which the heat from the nuclear reaction is used to heat the water surrounding the fuel rods, the reactor vessel being under pressure. This water is then recirculated through heat exchangers (termed steam generators), in which the heat of the water is transferred to the preheated condensate drawn from the condenser. In this way, wet steam is generated under pressure and supplied to the throttle of the steam turbogenerator. The steam generator separates the turbine cycle from the water in direct contact with the fuel rods.

Condensers

air leakage. Amount of standard air (at 14.7 psia [101.4 kPa] and 70°F [21°C]) discharged from air-removal apparatus.

air outlet pressure. The pressure of the air and vapor mixture at its exit from the condenser shell.

air outlet temperature. The temperature of the air and vapor mixture at its exit from the condenser shell.

cleanliness factor. The ratio of thermal transmittance of used tubes to that of new tubes operating under identical conditions.

condensate flow. The rate at which condensate is discharged from the condenser. This may include drains if they are discharged into the hotwell, but such additions should be avoided if possible.

condensate subcooling. The difference between the temperature of the condensate in the hotwell and the saturation temperature that corresponds to the vapor pressure at the inlet to the condenser.

condensate temperature. The temperature of the condensate leaving the condenser. Where the storage hotwell is an integral part of the condenser, this temperature is the condensate reading taken at the exit of the condenser shell and prior to entering the storage hotwell.

condenser back pressure threshold. The turbine manufacturer specifies both the maximum and minimum back pressures within which the turbine LP stage should be operated. The limit on maximum back pressure is selected to reduce blade damage due to turbulence. The limit on minimum back pressure reduces the possibility of blade damage due to moisture impingement.

condenser friction head. The loss of pressure due to friction in the cooling water circuit between the points where the water enters and leaves condenser.

condenser load. The rate at which heat is transferred to cooling water.

condenser pressure. The absolute static pressure of steam at the point where it enters the condenser.

condenser pressure drop. The loss of pressure between the exhaust steam inlet and air outlet point.

condenser vacuum. The difference between the prevailing atmospheric pressure and the pressure of steam where it enters the condenser.

condensing surface. The total active external area of all tubes in the condenser, including the external air cooler if used. The tube sheet area should not be included. The active area excludes any tubes that may be plugged.

cooling water flow rate. The quantity of cooling water passing through the condenser per unit of time.

density of cooling water. The weight per unit volume of the liquid leaving the condenser corrected for temperature and salinity.

enthalpy of condensate leaving condenser. The heat content per unit mass of the liquid leaving the condesner, obtained from steam tables.

enthalpy of steam entering condenser. The heat content per unit mass of the steam entering the condenser from the steam turbine, usually obtained by computations based on a knowledge of the turbine's performance.

fouling resistance. The sum of the resistances due to fouling on both surfaces of used tubes.

initial temperature difference. The difference between the steam temperature and the temperature of cooling water entering the condenser.

inlet steam temperature. The saturation temperature corresponding to the pressure of the steam entering the condenser (unless the steam is superheated).

inlet temperature of cooling water. The temperature of cooling water entering the condenser.

inlet water pressure. The static pressure of cooling water near the flange of the inlet waterbox.

mean temperature difference. The computed logarithmic mean temperature difference between steam and cooling water.

new tube transmittance. The thermal transmittance of new sample tubes used in determining the cleanliness factor.

old tube transmittance. The thermal transmittance of the old or used sample tube used in determining the cleanliness factor.

outlet temperature of cooling water. The temperature of cooling water leaving the condenser.

outlet water pressure. The static pressure of cooling water where it emerges from the outlet waterbox.

overall thermal transmittance. The amount of heat transferred per unit of time, unit of surface area, and degree of temperature difference. With surface condensers, this quantity is the fundamental measure of the performance of the condenser.

specific heat of cooling water. The change in the heat content of cooling water per unit temperature for the mean temperature and salinity compared with pure water at 60°F (15.6°C).

steam flow rate. The quantity of steam entering the condenser from the prime mover.

temperature rise. The increase in cooling water temperature from the inlet to the outlet of the condenser.

terminal temperature difference. The difference between the steam temperature and the temperature of cooling water leaving the condenser.

vapor subcooling. The difference between the air/vapor temperature and the saturation temperature corresponding to the pressure of the air/vapor mixture.

water velocity. The computed average water velocity through tubes. For multipass condensers with an unequal number of tubes in the different passes, the average of the average velocities for all passes in use.

Steam Jet Air Ejectors (SJAE)

aftercondenser. A condenser located at the discharge of an SJAE or after the last stage of a multistage system element.

breaking pressure. The pressure of either the motive steam or the discharge of the SJAE at which the ejector becomes unstable in operation.

capacity. The weight rate of the flow of the gas to be handled by the ejector.

critical flow. The flow passing through a nozzle when the downstream absolute pressure is below the critical pressure, approximately 55% of the pressure of the motive steam.

design point. The combination of design absolute suction pressure and equivalent air or equivalent steam flow.

diffuser. The contracting/expanding tube located at the exit from the steam nozzle.

discharge. The connection through which the mixture of steam and air/vapor mixture is discharged from the SJAE.

discharge pressure. The absolute static pressure prevailing at the discharge from an SJAE.

ejector nozzle. The nozzle through which the motive steam source is expanded.

intercondenser. A condenser located between any two stages of a multistage ejector system element.

multielement SJAE system. A system where more than one single- or multistage ejector system is arranged in parallel.

multistage ejector. A system where more than one steam jet air ejector is arranged in series with other ejectors.

precondenser. A condenser located at the inlet to the first stage of an ejector system element.

recovery pressure. The pressure of either the motive steam or the discharge of the SJAE at which the ejector recovers to a condition of stable operation.

single-element SJAE system. A system that contains only one single- or multistage SJAE system.

single-stage ejector. A system that contains one steam jet air ejector.

stable operation. The condition of a steam jet air ejector when it is operating without violent fluctuations of the suction pressure.

steam inlet. The connection for the motive steam source.

suction port. The connection to the air-removal section of the condenser.

suction pressure. The absolute static pressure prevailing at the suction port of the ejector.

Liquid Ring Vacuum Pumps (LRVP)

actual capacity. The actual volume flow rate of the gas to be handled by the LRVP, measured at the actual pump inlet pressure and temperature and expressed in ACFM.

conical ports. Pumps designed so that the gas enters through ports created in a cone that surrounds the impeller or rotor shaft, and discharges through a second set of ports created in another area of the same cone.

design point. The required combination of inlet pressure and the dry air flow rate in acfm.

flat ports. Pumps designed so that the gas enters and discharges from the pump through a set of ports created in the flat plate located at one end of the impeller or rotor.

inlet capacity. Synonymous with “actual capacity.”

rarified capacity. Synonymous with “actual capacity.”

service liquid. The compressant fluid continuously supplied to the pump to create the liquid ring inside the pump casing.

service liquid flow. The flow of service liquid required by the LRVP at a given inlet condition, based on once-through water flow.

service liquid reference temperature. The service liquid is usually water and the reference temperature is 60°F (15.6°C).

service liquid supply temperature. The temperature of the service liquid at the service liquid connection of the LRVP.

B
BIBLIOGRAPHY OF RELEVANT EPRI PUBLICATIONS

***ABCs of Condenser Technology,* August 1994, EPRI Report TR-104512, Nuclear Maintenance Applications Center, Charlotte, NC.**

Abstract: Nuclear Maintenance Application Center (NMAC) products and services are geared directly to day-to-day maintenance activities, and have proven both extremely successful and cost-effective in improving maintenance practices. NMAC provides a conduit for the ongoing exchange of information among utilities and industry maintenance personnel. The NMAC approach helps individual nuclear facilities incorporate the collective wisdom of the industry into their own maintenance and operating plans. This report presents the essence of condenser maintenance and operation technology from the prodigious amount of research conducted by EPRI's Generation Group on steam surface condenser technology. Information in this document is very basic, providing an overall understanding of the condenser operation and the tasks involved in effectively maintaining it. This document should also be useful for training new personnel in condenser work. A detailed reference section has been provided for those who wish to obtain other EPRI research documents on this topic.

***Assessment of Condenser Leakage Problems,* EPRI Report NP-1467, August 1980.**

Abstract: This report presents the results of a technical planning study of condenser leakage problems that was performed for EPRI. The planning study utilized information gathered by an HEI questionnaire on condenser tube leakage and the results of an earlier EPRI sponsored Bechtel survey of condenser leakage experience in steam plants.

Problem areas discussed in the report include air leakage, locating cooling water leaks, tube ID inlet attack, fouling, steam side erosion, flow induced vibration, OD corrosion, and tube to tubesheet leakage.

Recommendations are made for EPRI sponsored research, equipment specification requirements, and plant operating or maintenance procedures to mitigate the condenser leakage problems currently being experienced. EPRI sponsored research is recommended in the areas of cathodic protection, low level chlorination effectiveness, flow induced vibration, locating leaks, double tubesheet performance, and steam/water erosion of tubes.

***BWR Chemistry Guidelines,* 1996 Revision, EPRI Report TR-103515-R1, December 1996.**

Abstract: Control of BWR water chemistry increases plant availability by reducing intergranular stress corrosion cracking (IGSCC) in cooling system piping and reactor internals. This revision of the 1993 "BWR Water Chemistry Guidelines" incorporates new information which plant

chemistry personnel can use to develop proactive plant-specific water chemistry programs that minimize IGSCC, fuel performance degradation, and radiation buildup.

Background: The discovery of IGSCC in the core shrouds of several plants indicates that cracking may be present in other reactor internal components. In response, the BWR Water Chemistry Guidelines Committee and the Mitigation Committee of the BWR Vessel and Internals Program (BWRVIP) have developed revised guidelines to establish a proactive position on water chemistry for mitigating IGSCC while maintaining fuel integrity and controlling radiation fields.

Objective: To update the "BWR Water Chemistry Guidelines--1993 Revision."

Approach: A committee of industry experts—including utility specialists, nuclear steam supply system (NSSS) vendors and fuel vendor representatives, Institute of Nuclear Power Operation (INPO) representatives, consultants, and EPRI staff—collaborated in reviewing the available field and laboratory data on BWR water chemistry controls and their impact on plant operation, corrosion mechanisms, and radiation fields. Based on these data, the committee identified a spectrum of water chemistry regimes from which utility personnel can select a site-specific program.

Results: Hydrogen water chemistry (HWC) effectively mitigates IGSCC by reducing corrosion potential; however, it has demonstrated side effects. This revision recommends that HWC be incorporated into the station chemistry program, unless an engineering evaluation demonstrates that it is not a cost-effective option. Other changes in this revision are as follows:

- The discussion of IGSCC and the role of hydrogen injection in mitigation have been expanded.
- The discussion of the effect of HWC on radiation fields has been strengthened, and a method for determining optimum plant-specific zinc concentrations to control radiation fields is provided. An optimum range of 1 +/- 0.5 ppb for feedwater iron has been incorporated into the discussion of iron effects on radiation fields.
- The role of HWC and zinc have been incorporated into the discussion of water chemistry effects on fuel integrity. Minimization of flow-accelerated corrosion (FAC) has been included as one of the technical bases for water chemistry control, due to concerns that HWC may increase FAC at plants with susceptible materials.
- Recommended chemistry surveillance has been reduced wherever appropriate to decrease O&M costs.
- An appendix on noble metal chemical addition is included.

EPRI Perspective: These guidelines provide water chemistry recommendations for BWRs during all modes of operation. They summarize the technical bases for all water chemistry alternatives and offer direction on the development of plant-specific chemistry programs. An important objective of the guidelines is to provide guidance on the optimum response to impurity ingress transients or loss of hydrogen transients. As BWR experience with chemistry alternatives increases, the industry database will continue to grow. Standardized programs such as these guidelines help increase utility understanding of water chemistry impacts, while ensuring that

surveillance data are available for future improvements. Each of the crack growth models used in this document is believed to be overconservative in some chemistry regimes. Although the guidelines recommend appropriate regimes of application for each model, the choice of two different models complicates the plant operator's task in responding to an off-normal situation. Recognizing this, the committees determined that the guidelines will be revised as soon as additional crack growth data and more refined models become available.

***Condenser In-leakage Monitoring System*, EPRI Report NP-2597, September 1982. This item is out of print.**

Abstract: An instrument/hardware package for air and condenser cooling water in-leakage location employing the helium and freon techniques was designed and fabricated. The package consists of design details for tracer gas distribution hardware, injection plenums, and a sample preconditioner and instrument module. Design of the package was based on an evaluation of helium and freon leak detectors and a survey of utility user's experience with the helium and freon techniques. The applicability of the instrument/hardware package to air and cooling water in-leakage location was demonstrated at Pacific Gas & Electric Company's Moss Landing Station. The use of calibrated leaks indicated that cooling water leaks down to 1.5×10^{-4} gpm (0.56 ml/min) and air leaks down to 0.005 cfm were readily detectable with the helium technique, whereas a 4×10^{-4} gpm (1.5 ml/min) liquid leak was the readily detectable minimum via the freon technique. The field demonstration and in-house detector testing showed the helium technique to be preferable to the freon technique for in-leakage location at PWRs, BWRs, and fossil-fueled systems.

Project Description: RPS182 is one of a series of projects sponsored by the Steam Generator Owners Group to develop techniques to minimize aggressive impurities being introduced into the steam generator feedwater by leakage of cooling water and/or air into the condenser. The project was initiated to develop an instrument-hardware package for detecting air and cooling-water in-leakage utilizing freon or helium as a tracer gas.

Project Objectives: This project involved the design, fabrication, and field demonstration of a detector module-hardware system for the location of air and cooling-water inleakage employing freon and helium techniques. A set of detailed drawings and suitable operating instructions also were to be furnished.

Project Results: An instrument-hardware package for air and condenser cooling-water in-leakage location employing the helium and freon techniques was designed and fabricated. The applicability of the instrument-hardware package to air and cooling-water inleakage location was demonstrated at Pacific Gas & Electric Company's Moss Landing Station. The field demonstration and in-house detector testing showed the helium technique to be preferable to the freon technique for inleakage location in PWRs, BWRs, and fossil-fueled systems.

This report will be of interest to designers and operators of both fossil and nuclear power plants that are interested in techniques and equipment for monitoring and reducing ingress of contaminants into steam, condensate, and feedwater systems.

***Condenser Leak-Detection Guidelines Using Sulfur Hexafluoride as a Tracer Gas*, EPRI Report CS-6014, September 1988.**

Abstract: Air and cooling-water in-leakage in condensers is the leading source of condensate and feedwater impurities; excessive air in-leakage also increases condenser back pressure. These guidelines can help utilities use the new sulfur hexafluoride tracer gas technology to locate very small leaks.

Background: The most commonly used method to detect air and water in-leakage in condensers is the EPRI-developed helium leak-detection technology (EPRI report NP-0912). Science Applications International Corporation has recently developed a hardware system that uses sulfur hexafluoride (SF_6)—a tracer gas used for tracking airborne pollutants in the atmosphere. The SF_6 detection system is more sensitive than helium or other gases and thus can detect smaller leaks. Furthermore, this system has lower maintenance requirements, and its SF_6 injection system is easy to transport. However, the high sensitivity of the SF_6 detection system can result in false indications if the system is not operated properly.

Objective: To develop guidelines for using SF_6 tracer gas to detect air and water in-leakage in power plant steam condensers.

Approach: Based on previous experience using SF6 or helium, the project team developed an air in-leakage test procedure and an on-line waterbox leak-test procedure. They demonstrated these procedures at the Baltimore Gas and Electric Company Wagner station and developed guidelines, which were reviewed by the EPRI Condenser Advisory Group.

Results: The guidelines include the following:

- Gaseous tracer leak-detection principles and application
- Test equipment descriptions and installation instructions
- Operating instructions for avoiding SF_6 contamination of the background
- A generic air in-leakage checklist
- An overview of on-line condenser tube leak testing
- An overview of off-line air in-leakage testing. In addition to generic information, the report provides examples of a plant-specific air in-leakage checklist, air in-leakage test procedures, and on-line waterbox leak-test procedures.

EPRI Perspective: The importance of maintaining condenser integrity to minimize air and cooling-water in-leakage cannot be overemphasized. The report provides practical information that can help utility engineers locate condenser leaks. This report focuses on using SF_6 as the tracer gas; however, the detection technique will work with other tracer gases as well. EPRI report NP2062 provides information on steam plant surface condenser leakage. Report NP-2597 presents development of a condenser in-leakage monitoring system using helium. A related project (RP1689-19) investigates a targeted tracer injection technique to extend on-line leak detection to individual tubes in the waterbox. This method will further reduce the downtime needed to plug a leaking tube.

***Condenser Performance Test and Replacement Tubing Material Evaluation*, EPRI Report CS-5662, April 1988.**

Abstract: Wisconsin Public Service Corporation tested the performance of the Kewaunee nuclear plant condenser and selected Type 439 stainless steel to replace existing admiralty tubing. The analytic approach can help utilities predict condenser performance in similar situations. Selection of Type 439 stainless steel offers projected lifetime savings of $404,000 over Type 304 stainless steel and $618,000 over Type 316 stainless steel.

Background: Condenser performance can significantly affect the heat rate and generation capacity of fossil and nuclear power plants. A 1-in. mercury increase in back pressure could result in a 2% reduction in generation capacity. However, because of changing plant load, cooling-water temperature, and flow rate, back pressure is not a true indication of condenser efficiency. Accurate condenser performance evaluation requires extensive instrumentation, data collection, and analysis. This study documented the methods used for thorough condenser testing and replacement tubing material evaluation.

Objective: To document work at the Kewaunee nuclear plant to test and improve condenser performance.

Approach: Wisconsin Public Service Corporation conducted tests of circulating water flow, condenser air binding and air-removal system performance, and condenser thermal performance at the Kewaunee nuclear plant (KNP). Tests of condenser performance—evaluated in terms of fouling, air binding, and plant instrumentation—included a side-by-side comparison of three grades of stainless steel (SS) tubes with admiralty tubes. The team compared the results with the tube material correction factor recommended by the Heat Exchange Institute (HEI). They also used the results to predict condenser performance after replacement of all admiralty tubes with SS tubes to minimize copper pickup. They analyzed additional impacts of tubing material change, including cost and turbine heat rate.

Results: Although the circulating water flow test conducted at KNP found a flow deficiency of approximately 5%, there was no indication of an air-binding problem. The condenser performed well at full load with a cleanliness factor of 0.92. Comparison of admiralty tubes with Type 304 SS tubes indicated that the SS tube material correction factor was 15.6% higher than the HEI recommendation. The net present value of retubing with Type 439 SS was $404,000 greater than with Type 304 SS and $618,000 more than with Type 316 SS. KNP retubed the condenser with Type 439 SS in 1985.

EPRI Perspective: This report documents one of the most thorough condenser performance analyses conducted in the United States, using up-to-date testing and investigative techniques. This study is part of a larger EPRI effort responding to increasing interest in heat-rate and condenser performance improvements.

- Condenser performance evaluation requires accurate cooling-water flow measurement and exit temperature traversal. KNP used a four-path acoustic measurement to study cooling-water flow. Forthcoming results of EPRI project RP1689-14 describe the use of a dye dilution method.

- The side-by-side heat transfer test confirmed the deficiency of the HEI tube material and gage correction factors for SS tubes. The study recommends the prompt reevaluation of tubes made from new SS and titanium to arrive at a more accurate tube material and gage correction factor.
- A complementary EPRI study, report CS-5729, explored a condenser performance deficiency at the Indianapolis Power and Light Company Petersburg unit 3. That study identified four causes of air binding and determined appropriate remedial action.

***Condenser Procurement Guidelines*, EPRI Report CS-3844, May 1985. This item is out of print.**

Abstract: Reflecting the experience of a large segment of the electric power industry, these guidelines will help utility personnel and architect/engineers to prepare purchase specifications for large steam surface condensers. More accurate, complete specifications should lead, in turn, to more reliable condenser design and operation.

Background: Steam surface condensers have a major impact on power plant availability. Condenser purchase specifications, therefore, must be accurate and complete—describing all design requirements, operating conditions, and off-standard conditions that can affect equipment reliability. While considerable information has been available on condenser design and performance, no single document has included sufficient information to support preparation of adequate condenser purchase specifications and evaluation of alternative products.

Objective: To provide guidelines to assist utilities and architect/engineers in preparing purchase specifications that include all design requirements necessary for procuring reliable steam surface condensers.

Approach: The authors collected information on condenser procurement practices from existing specifications; from industry conferences, seminars, and publications; and from recent EPRI studies on condenser performance and reliability. The authors then proposed that, similar to the Naval Shipboard Condenser Specification MIL-C-15430J (Ships), industry specifications be divided into six major sections: scope, applicable documents, requirements, quality assurance, preparation for delivery, and notes. They then prepared guidelines on how to complete each section, discussing in some detail material that was not self-explanatory. All sections were reviewed by the EEI Prime Movers Committee and representatives of architect/engineering and manufacturing firms.

Results: By identifying the wide range of condenser designs, operating capabilities, and fabricating procedures that may be offered, this study provides bases on which utility personnel and architect/engineers can make equipment selections. These guidelines—intended primarily for condensers in moderate and large power plants (50 MW and larger)—can be applied to all steam condensers. The six major guideline sections conform to the naval specification format. Formulas, materials, performance standards, and design criteria are suggested for completing each section of the proposed specification.

EPRI Perspective: In general, a procurement document should focus on the results desired rather than on the methods of achieving them. But it is important that utility personnel having

procurement responsibilities be able to evaluate, accept, or reject specific condenser designs and fabricating procedures. Consequently, these guidelines describe the state of the art in proven condensers and can be used by utility personnel and architect/engineers to prepare appropriate specifications for specific applications. In addition, they describe the potential benefit of promising but still unproven designs. This report is one of a series of documents being prepared to assist the electric power industry in the purchase of power plant components. Guidelines for the procurement of feedwater heaters (to be developed in EPRI project RP1887-01) will be published later this year. The series also includes guidelines for procurement of pulverizers (EPRI report CS-2179). The condenser procurement guidelines are part of a continuing EPRI study for improving condenser reliability. Other reports on this subject include CS-3200 and RD-2282-SR.

***Condenser Performance Test and Back-Pressure Improvement,* EPRI Report CS-5729, April 1988.**

Abstract: Indianapolis Power and Light Company analyzed and corrected a performance deficiency of the Petersburg unit 3 condenser, resulting in an annual fuel savings of $460,000. This study identified four causes of air binding and appropriate remedial measures.

Background: Condenser performance can significantly affect the heat rate and generation capacity of fossil and nuclear power plants. A 1-in. mercury increase in back pressure could result in a 2% reduction in generation capacity. However, because of changing plant load, cooling-water temperature, and flow rate, back pressure is not a true indication of condenser efficiency. Accurate condenser performance evaluation requires extensive instrumentation, data collection, and analysis. This study documented the methods used for thorough condenser testing and performance improvement investigation.

Objective: To document work at Petersburg unit 3 to test and improve condenser performance.

Approach: The project team studied the Indianapolis Power and Light Company Petersburg unit 3 condenser, which had experienced higher-than-designed back pressure since initial commercial operation. When they traversed the condenser tubesheet with a temperature probe to obtain a temperature profile for circulating water exiting the tube bundle, they found an air binding problem that persisted even after correction of most of the air in-leakage. The team then tested and cleaned the vacuum removal system. They also added a plate at the top of the bundle to eliminate bypassing of steam to the air-removal section. Using a proprietary computer code, they investigated other possible modifications to alleviate the air-binding problem. They also conducted cost-benefit analyses to compare performance improvement with modification cost.

Results: The air binding problem of the Petersburg unit 3 condenser resulted from (1) a high air in-leakage rate, (2) reduced vacuum pump performance caused by fouling of the vacuum pump seal water heat exchanger, (3) steam bypass to the air-removal section of the tube bundle, and (4) poor bundle design. Remedial action, including a reduction in air in-leakage, improvement in vacuum pump performance, and addition of baffle plates, reduced back pressure by 1.1 in. Hg in the low-pressure bundles and by 0.8 in. Hg in the high-pressure bundles. Analyses determined that the reduction of air in-leakage and periodic cleaning of the pump seal water heat exchanger are the most cost effective means to maintain condenser performance. A computer code capable

of modeling the condenser tube bundle and predicting air pockets has proven to be a valuable tool in analyzing condenser performance.

EPRI Perspective: This report documents one of the most thorough condenser performance analyses conducted in the United States, using up-to-date testing and investigative techniques. The study responds to increasing interest in heat-rate and condenser performance improvements. A complementary study, EPRI report CS-5662, describes performance testing of Wisconsin Public Service Company's Kewaunee nuclear plant condenser. That study also compared three grades of stainless steel tubing with the existing admiralty tubes and analyzed costs and heat rate changes associated with tube replacement.

***Condenser In-Leakage Monitoring System Development,* EPRI Report NP-2597, September 1982.**

Abstract: This report describes the design and fabrication of an instrument-hardware package for locating air and condenser cooling-water in-leakage by means of helium and freon techniques. The package consists of design details for tracer gas distribution hardware, injection plenums, and a sample preconditioner and instrument module. Results from in-house detector testing and a field demonstration show the helium technique to be preferable.

***Design and Operating Guidelines for Nuclear Power Plant Condensers,* EPRI Report NP-7382, September 1991. This item is out of print.**

Abstract: These guidelines are designed to minimize the ingress of corrodents via condensate systems and thereby protect secondary plant components, especially steam generators. The guidelines are particularly valuable in modifying existing condensate systems or in designing such systems for new nuclear power plants.

Background: Steam generator corrosion has resulted in high costs and significant reductions in plant availability in U.S. PWRs. In some cases, degradation of steam generator materials has necessitated complete replacement of steam generators. Research has demonstrated that ingress of oxygen and ionic impurities, resulting from condenser in-leakage, further increases the burden of total steam generator impurity.

Objective: To provide recommendations for the design and operation of condensate systems that will minimize impurity ingress.

Approach: The project team gathered operating and maintenance data through mail surveys, personal visits, and related project reports. They obtained industry review and comments and organized the information in the form of guidelines.

Results: Recommendations and associated justifications are provided for the design and operating aspects of condenser systems. The design section addresses all aspects of condenser design that will help to minimize impurity ingress. Specific areas include: (1) materials selection for tubes, tubesheet, and waterboxes; (2) cathodic protection; (3) biofouling control; (4) air cooler section performance criteria; (5) instrumentation; (6) cooling-water leak-tight integrity; (7) air in-leakage minimization; (8) air-removal geometry; (9) turbine bypass and high-energy

drains; and (10) access and inspection. The operating section identifies ongoing efforts to ensure optimum condenser performance, including: (1) startup procedures; (2) monitoring instrumentation; (3) determination of air in-leakage; (4) heat transfer performance; (5) shutdown/lay-up procedures; (6) inspections of tubes, waterboxes, air cooler section, and shell side; and (7) leak testing.

EPRI Perspective: Research demonstrates that PWR steam generator reliability is directly linked to minimizing impurity ingress into the secondary cycle. Additionally, many problems in early condenser systems resulted in significant ingress of cooling water into the cycle. These guidelines will help utilities design condenser systems that minimize these types of ingress. The design section of the guidelines provides reference material for utilities considering condenser retubing or other major modifications. The operating section contains guidance on routine operation and maintenance of existing condenser systems.

***Cycling, Startup, Shutdown, and Layup Fossil Plant Cycle Chemistry Guidelines for Operators and Chemists*, EPRI Report TR-107754, September 1998.**

Abstract: The purity of water and steam is central to ensuring fossil plant component availability and reliability. This report will assist utilities in developing cycle chemistry guidelines for all transient operation and shutdown.

Background: EPRI has published four operating guidelines for phosphate treatment, all-volatile treatment, oxygenated treatment, and caustic treatment. These guidelines encompass five drum boiler water treatments and three feedwater choices that can provide the optimum cycle chemistry for each unit. A similar, consistent approach was needed for startup, shutdown, and lay-up. Improper shutdown of a unit can lead to pitting, which is a precursor to major corrosion fatigue and stress corrosion damage in the turbine. It can also lead to the development of nonprotective oxides on copper alloys in the feedwater.

Objective: To provide comprehensive guidelines for cycle chemistry during startup, shutdown, and lay-up of fossil plants; to provide optimum procedures for the boiler, superheater, reheater, turbine, and feedwater heaters.

Approach: EPRI developed an initial skeleton of the guidelines that provided the basis for a series of working group meetings with members of the EPRI Fossil Plant Cycle Chemistry Group (FPCCG). Following these meetings, EPRI and five of its cycle chemistry consultants developed a draft document and circulated it to the 40 members of the FPCCG for review and comment.

Results: This guideline provides the final link needed for comprehensive coverage of cycle chemistry in fossil plants. It provides specific procedures and advice during cycling, shutdown, startup, and lay-up for each of the boiler and feedwater treatments and covers all major water and steam touched surfaces. The guideline is applicable to drum boiler units above 600 psi (4.1 MPa), once-through subcritical and supercritical boiler units, units with and without condensate polishers, all-ferrous and mixed metallurgy feedwater systems, and superheaters, reheaters and turbines.

EPRI Perspective: While most utilities can meet EPRI cycle chemistry guideline limits, a large number of problem areas have been identified that relate to poor transient (startup/shutdown) operation and improper lay-up procedures. Two such important mechanisms are pitting in unprotected reheaters, which can lead to multiple reheater leaks, and pits on low-pressure turbine blade/disk surfaces in the phase transition zone. A very low percentage of utilities currently provide shutdown protection to boilers, feedwater heaters, and turbines. This document will provide the important interfaces between plant operation, plant shutdown, and transient conditions.

***Engineering Assessment of Condenser Deaeration Retrofits for Cycling Fossil Plants,* EPRI Report CS-5601, January 1988.**

Abstract: High dissolved oxygen levels in condensate contribute to corrosion problems in fossil plant boilers and turbines and in nuclear plant steam generators. Two system designs, retrofittable to a condenser at the Public Service Electric & Gas Sewaren station, demonstrated the potential for cost-effective reduction of dissolved oxygen.

Background: Many fossil units and most nuclear units in the United States rely on condensers to reduce oxygen levels in steam condensate. Condensers remove dissolved oxygen most effectively during full-load operation; however, dissolved oxygen concentration increases significantly during low-load and standby operations. Earlier EPRI studies (reports NP-1467 and CS-4629) identified dissolved oxygen in the condensate as a principal cause of corrosion problems in fossil plant boilers and turbines and of denting in nuclear steam generators. A cost-effective system capable of reducing dissolved oxygen under all operating conditions and readily retrofittable to existing condensers would offer utilities a desirable solution.

Objective: To evaluate several retrofit modifications to existing condensers that would reduce dissolved oxygen levels in the condensate of a fossil or nuclear unit during all operating modes.

Approach: The project team identified three potential retrofit systems for reducing dissolved oxygen levels at low load: the booster ejector, air chiller, and steam bubbler. They selected the Public Service Electric & Gas (PSE&G) Sewaren station unit 4 for a retrofit study. The team collected site-related information and operation history, conducted performance tests on the condenser to establish baseline data, and used this information to develop designs for the three systems. They also evaluated new equipment requirements, modification requirements for existing equipment, and test programs. In addition, they developed schedules and cost estimates for retrofit implementation.

Results: All three systems were proven to be potentially retrofittable to the Sewaren unit 4 condenser. They would also reduce dissolved oxygen concentration in the condensate to 10 ppb or less at half-load operation and 20 ppb or less at low-load and standby conditions. Both the booster ejector and the air chiller systems could maintain low air fractions in the condenser through increased removal of the steam-air mixture. These two systems were designed for installation outside of the condenser, whereas the steam bubbler system required installation inside the condenser. Estimated installation costs totaled $250,000 for the steam bubbler; $346,000 for the air ejector; and $2 million for the air chiller. Implementation and testing of both

the steam bubbler and the booster ejector at the Sewaren plant would take approximately 18 months and cost an estimated $800,000.

EPRI Perspective: This study, cosponsored by PSE&G and EPRI, indicates that three systems—the booster ejector, air chiller, and steam bubbler—can potentially reduce dissolved oxygen in the condensate of a cycling fossil unit to an acceptable level. The steam bubbler and the booster ejector exhibited the most cost-effective oxygen reduction in the Sewaren station retrofit study. Although addition of supplemental air-removal equipment contributes to the air chiller's high cost, this system could prove cost effective in regions with higher year-round cooling-water temperature. PSE&G is proceeding with installation and testing of the booster ejector system at their Mercer station unit 2. EPRI will closely monitor and report on the progress of this follow-on effort.

***Evaluation and Improvement of PWR Secondary-System Oxygen Control Measures,* EPRI Report NP-3020, July 1983.**

Abstract: This report documents a study on the design and operation of balance-of-plant systems and components to minimize oxygen-induced corrosion in the secondary systems of PWRs. Recommendations on equipment and design modifications that would correct air in-leakage in most plants are presented, along with associated costs. The use of hydrazine to scavenge oxygen in secondary systems is evaluated, and recommendations on operating and maintenance practices are presented.

***Failure Cause Analysis - Condenser and Associated Systems,* EPRI Report CS-2378, June 1982. This item is out of print.**

Abstract: Steam surface condensers and their associated systems are a frequent cause of generating losses resulting from outages, load reductions, and poor performance. This study, presented in two volumes, was initiated to determine the effects of condenser and associated system problems on power plant availability and performance.

Data were received from 415 power plant units, and visits were made to selected utilities. The most significant problems were in the areas of tube and tubesheet fouling, intake blockage, tube failures, traveling water screens, heater drain pumps, condensate pumps, feedwater heater tube failures, vacuum priming systems, and circulating water pumps Fouling is the most outstanding reason for lost generating capacity, either through availability or performance loss.

The main conclusion drawn from this study is that there is a need for definitive industry guidelines for condensers and intakes. Developmental work should be carried out on intake designs and intake retrofits, which will help to mitigate the effects of macrofouling and possibly to assist in microfouling control at the same time. New concepts, such as greater modularization and replaceable tube bundles, should be considered for increasing condenser reliability.

Project Description: This final, two-volume report under RP1689-2 is one of several surveys being conducted by the Fossil Plant Performance and Reliability Program to define more clearly the major generic equipment and/or operating problems responsible for utility power plant

outages. This survey includes input from 45 American utilities with a total of 150 stations reporting on 415 condensers and associated systems.

Project Objectives: The main objectives of this two-year investigation were to identify and quantify the problems with condensers and their associated systems, to quantify the generating losses associated with these problems, to evaluate the effectiveness of problem solutions that were implemented, to provide recommendations for solutions to recurring problems, and to develop a priority list of recommendations for further analysis of problem areas.

Project Results: Data analysis resulting from this survey clearly demonstrates problems with condensers and associated systems and their components that contribute to losses in performance and availability of generating units. The most significant problems were in the areas of tube and tubesheet fouling, intake blockage, tube failures, traveling water screens, heater drain pumps, condensate pumps, feedwater heater tube failures, vacuum priming systems, and circulating water pumps.

Recommendations are made to improve the reliability of existing condenser and associated system components, and generic problems requiring future developmental work and application of existing technologies are identified. It is also recommended that users place more emphasis on the initial procurement phase to specify those design features that improve reliability. Another recommendation is to encourage manufacturers to accelerate their efforts to improve the technology and correct critical problems by upgrading industry standards. Implementation of the recommendations included in this report, by users and manufacturers, can substantially improve the availability of condensers.

***High-Reliability Condenser Design Study*, EPRI Report CS-3200, July 1983. This item is out of print.**

Abstract: U.S. and European condenser designs and practices were reviewed in order to recommend improvements and further research needs. Designs for enhancing condenser integrity, deaeration, and thermal performance are discussed. Improvements in condenser-associated systems are also addressed, including macro- and micro-fouling control technologies and cooling-water pump designs. Several areas for research are identified.

***High-Sensitivity Dissolved-Gas Monitoring System With Applications for PWR Secondary-Side Chemistry*, EPRI Report NP-4564, May 1986.**

Abstract: The EPRI dissolved-gas monitoring system (DGMS), developed to locate air leakage into PWR secondary systems, underwent modification to extend its analytic scope as a result of field testing. Now, tests at two plants have confirmed the sensitivity of the newly automated DGMS in analyzing low levels of dissolved gases and the effects of procedural and system changes.

Background: Dissolved oxygen promotes corrosion in PWR secondary-system components. Other dissolved gases interfere with routine chemistry monitoring. As originally tested, the DGMS analyzed for low concentrations of dissolved oxygen, argon, and nitrogen in secondary coolant (EPRI report NP-2865). However, that testing of the prototype DGMS at the Northeast

Utilities' Millstone-2 plant suggested several modifications, including expansion of DGMS analyses to other gases. In particular, plant personnel were concerned with dissolved carbon dioxide, suspected of causing high cation conductivity.

Objective: To extend the analytic capabilities of the DGMS by adding features recommended by power plant personnel.

Approach: In laboratory experiments, researchers selected the column packing material for a DGMS gas chromatograph. They then constructed a breadboard system to test the feasibility of the modified conceptual design and to identify the best equipment sizes and fluid flow rates. On that basis, they built a prototype analyzer incorporating the processing features of the breadboard unit and the mechanical features suggested by Millstone plant personnel. Those features included compactness, durability, automation, and repetitive sequential sampling of multiple streams. The prototype underwent testing for operability and stripping efficiency under actual operating conditions at the Alabama Power Company's Farley nuclear station and at the Portland, Oregon, General Electric Company's Trojan plant.

Results: The DGMS proved an effective aid in reducing air in-leakage at both power plants. In four tests, for example, the monitor helped identify modifications that lessened the concentrations of dissolved oxygen in the secondary cycle by factors of from 2 to 6. Comparisons showed the DGMS data agreed with analyses of grab samples, and recalibration or repair of existing plant instrumentation systems resolved all differences in dissolved-oxygen measurements in favor of the DGMS. Though the DGMS accurately quantified major air components, its carbon dioxide results were unacceptable. Equilibration of carbon dioxide and bicarbonate between stripping cycles appeared to be responsible for low stripping recoveries. However, after new findings from other work indicated that carbon dioxide did not cause high cation conductivity, the testing on carbon dioxide ceased. This report describes the DGMS equipment and summarizes the tests. It also provides detailed installation, startup, programming, operating, and troubleshooting instructions.

EPRI Perspective: The successful use of the DGMS at three plants marks an advance in the monitoring and control of plant water chemistry that will enable utilities to reduce corrosion and thus extend the life of plant components. In its present design, the DGMS has many possible applications. With analysis at the rate of two samples per hour, a DGMS can serve as a reference monitor for a plant's continuous dissolved-oxygen monitors, which tend to drift. In addition, the system can detect variations in the concentration of dissolved oxygen within sample lines to identify metaloxygen reactions or air in-leakage. Plant engineers can also use the DGMS to evaluate the effectiveness of changing oxygen scavengers or operating techniques. With argon blanketing, the DGMS can identify and quantify air in-leakage through specific components, as well as determine condenser degassing efficiency and pump flow rates. Information about obtaining a DGMS is available from the project managers. Among EPRI's earlier studies concerning the reduction of oxygen in-leakage are the two described in reports NP-3020 and NP-2597.

Location of Condenser Leaks at Steam Power Plants, **EPRI Report No. NP-912, October, 1978. This item is out of print.**

Abstract: The feasibility of using helium to locate water leaks in power plant surface condensers is demonstrated. Details of the necessary equipment and procedure are given. Results of measurements at two operating nuclear power plants are summarized. It is shown that the helium method can detect leaks smaller than 0.0001 gpm, which is approximately 1/100 the size of leaks detectable by currently used methods. The helium method can also be used to estimate the position of the leak along condenser tube.

Project Description: During plant operation, cooling water is flowed through the tubes of a stream condenser to condense the steam exiting from the plant turbine. In many plants, seawater or low-grade fresh water is used as the cooling medium. The partial vacuum created on the steam sides results in cooling water leakage into the secondary system of the tubes or tube-to-tube sheet interface develops leaks. The contaminants have been shown to produce corrosion in current steam generator designs. Location of leaks in a condenser that may have 10,000 tubes has been a continuing problem. This project proposes and demonstrates that with proper equipment leaks can be located using helium as a tracer gas.

Project Objectives: The purpose of this project was to develop equipment and procedures to demonstrate that helium as a tracer gas could be applied to the problem of locating cooling water leaks in power plant steam condensers. Denting of nuclear plant steam generator tubes and the criticality of plant materials have demonstrated a need to minimize any possible sources of contaminants of the secondary steam systems.

Over a dozen leak detection methods are in use at present: foam, candles, plastic sheets, sonics, and even pressurized fluorescent dyes in water applied to the steam side of the tubes when the plant is out of service (EPRI Condenser Report NP-481). Success is varied; inability to locate leaks is not uncommon, even when secondary system chemistry shows contaminants are leaking into the secondary system. No uses of helium are indicated.

The helium method reported herein utilizes a number of innovative ideas and procedures that overcome many of the problems that have made attempts to use tracer gases unsuccessful in the past. The condenser cooling water is valved off and the boxes are drained. With vacuum maintained on the steam side of the tubes, helium released on the cooling water side will pass through leaks to the air ejector or air pumps, where it can be detected by helium detection equipment.

Our innovative idea that makes the reported system work calls for placing an exhaust fan in the water box opposite the tube sheet face where helium is released. This fan is used both to cause a flow of air and released helium to move down the tubes and then to cause the gases to be exhausted away from the area, preventing background helium buildup with decreased sensitivity.

The second innovation calls for release of the helium in a plenum pressed and temporarily sealed against the tube face. This procedure limits the helium release to a known number of tubes. The plenum has a gas diffuser to spread the release over the covered tubes. The release mechanism releases a block of helium at the tube sheet face. The helium begins moving down the tubes. The

release mechanism then allows an input of follow-on air, which allows the block of helium to continue down the tubes. It also clears the plenum and tube face so the plenum can be moved to another set of tubes for checking.

If the helium detector identifies a leak in the off-gas system, use of a smaller plenum or even direct release to individual tubes can identify the leak path directly.

Conclusions and Recommendation: This report details the method of using helium as a tracer gas for leak location and results of tests of the method. The equipment pictured is the developmental equipment used to demonstrate that the system can be applied. Experience with application and development of manufactured components should obviously improve basic performance identified by these test results. Some judgement will of course be required for working with each individual plant. Some equipment, such as common collection plenums for air ejection or other designs, can make the system more difficult to apply.

We expect the system to be as fast as most existing methods and significantly more sensitive in its ability to locate condenser cooling water leaks.

***PWR Secondary Water Chemistry Guidelines – Revision 4,* EPRI Report TR-102134-R4, November 1996.**

Abstract: State-of-the-art water chemistry programs will reduce equipment corrosion and enhance steam generator reliability. These revised PWR secondary water chemistry guidelines—prepared by a committee of industry experts—represent the latest field and laboratory data on secondary system corrosion and performance issues. PWR operators can use these guidelines to update their secondary water chemistry programs.

Background: Industry water chemistry guidelines are updated periodically as new information becomes available. Previous versions of these PWR secondary water chemistry guidelines identified a detailed water chemistry program deemed to be consistent with the then-current understanding of research and field information. Each version discussed the impact of these guidelines on plant operation, noting that utilities may wish to revise the presented program following a plant-specific evaluation for implementation. Utility feedback since publication of revision 3 in May 1993 revealed that many utility chemistry personnel required further details on the corrosion mechanisms and how to integrate these and other concerns into the plant-specific optimization process.

Objective: To update the "PWR Secondary Water Chemistry Guidelines—Revision 3."

Approach: A committee of industry experts—including utility specialists, nuclear steam supply system vendor representatives, Institute of Nuclear Power Operations representatives, consultants, and EPRI staff—collaborated in reviewing the available data on secondary water chemistry and secondary cycle corrosion. From these data, the committee generated water chemistry guidelines that should be adopted at all PWR nuclear plants. Recognizing that each nuclear plant owner has a unique set of design, operating, and corporate concerns, the guidelines committee developed a methodology for plant-specific optimization.

Results: Revision 4 of the "PWR Secondary Water Chemistry Guidelines"—which provides recommendations for PWR secondary systems of all manufacture and design—has been completely reformatted as follows:

- Section 1 contains a shortened list of management responsibilities.
- Section 2 presents a compilation of corrosion data for steam generator tubing and, to a lesser extent, balance-of-plant materials. This information serves as the technical basis for the specific parameters and programs detailed in the document.
- Section 3 discusses the role of the concentration processes in local regions of the steam generator and the chemistry programs available for minimizing the impact of impurity concentration. It briefly identifies the supporting aspects and considerations in adopting these chemistry regimes.
- Section 4 presents a detailed method for performing the plant-specific optimization, including development of a modified chemistry program. To ensure the method's effectiveness, several utilities performed plant-specific evaluations using the materials presented in Appendix A. Section 4 also presents startup and operating chemistry parameters and limits which form the basis for the steam generator water chemistry controls. These controls serve as a starting point for site-specific optimization.
- Sections 5 and 6 present water chemistry programs for the recirculating steam generator (RSG) and once-through steam generator (OTSG), respectively. These sections are usually referred to frequently by chemistry personnel. The tables in these sections provide the boundaries for the plant-specific optimization procedures described in Section 4.
- Section 7 provides information on data evaluation, data management, and surveillance. This section has been revised to incorporate methods of using EPRI chemWORKS(TM) modules for evaluating plant data and predicting high-temperature chemistry environments throughout the cycle.

EPRI Perspective: This fourth revision of the "PWR Secondary Water Chemistry Guidelines," endorsed by the utility executives of the EPRI Steam Generator Management Project, represents another step in developing a more proactive chemistry program to limit or control steam generator degradation, with increased consideration of corporate resources and plant-specific design/operating concerns. Each utility should examine its plant-specific situation to determine which recommendations should be implemented.

***Recommended Practices for Operating and Maintaining Steam Surface Condensers,* EPRI Report CS-5235, July 1987.**

Abstract: By adopting effective operations and maintenance practices as recommended in these guidelines, utilities can minimize corrosion, extend service life, and improve performance in their steam surface condensers. One estimate suggests that such practices could improve availability by 1%—which, for all fossil plants in the United States, would mean an annual benefit of about $190 million.

Background: Air and water that leak into inadequately maintained condensers are the primary sources of impurity in boiler water. A correlation exists between corrosion failures on the boiler waterside and prior condenser tube failures. Similarly, impurities in boiler water and solid particles created by corrosion that are carried over by steam cause stress corrosion cracking and erosion in turbine blades. And significant generation loss and heat-rate degradation result from increases in condenser back pressure as fouling and air accumulate in tube bundles. In U.S. fossil fuel plants, condenser-related availability losses amount to $800 million yearly, with performance losses at another $300 million. This study is part of an effort that followed EPRI report CS-2378, Failure Cause Analysis, Condenser and Associated Systems.

Objective: To provide comprehensive information on steam surface condenser operations and maintenance that could improve availability and performance.

Approach: Project investigators reviewed recent literature on condensers, focusing on state-of-the-art techniques and practices. In addition, they gathered information on purchasing, operations, maintenance, and testing procedures from utilities and architect/engineering firms. They also consulted condenser and ancillary equipment manufacturers and material suppliers for recommendations on their products. On that basis, they developed operating and maintenance guidelines. An advisory group of utility personnel, architects, manufacturers, and individual experts reviewed drafts of the document.

Results: This report contains guidelines that include the following features:

- A list of problems on both shell sides and watersides of condensers, identified with contributing factors and cross-referenced to solutions.
- Operating procedures for performance monitoring, leak detection and location, lay-up, water treatment, and corrosion monitoring.
- Maintenance practices for cleaning, protection, tube plugging, and other countermeasures.

For convenience tables and charts listing the problems cross-reference the texts detailing the appropriate methods of detection and identification and the possible solutions. The texts also supply background information on the causes of problems, as needed for understanding. Thus, when establishing condenser operations and maintenance practices, utility personnel will have a basis for selecting the procedures that are most suitable for their operating modes, their condenser and circulating water systems, and their site-specific environments.

EPRI Perspective: The importance of establishing and maintaining sound condenser operations and maintenance procedures cannot be overemphasized. By following the recommendations in this report, a utility can establish new procedures or improve existing ones, tailored to its particular situation. Implementation could bring an estimated 1% improvement in availability. This report is a first step in an EPRI effort to produce a comprehensive condenser manual for utility power plants. Complementary report CS-5271 presents guidelines on macrofouling control. EPRI plans additional work concerning condenser on-line leak detection, heat transfer evaluation of new tubing materials, improved performance evaluation procedures, and a computer code for condenser system modeling in ongoing project RP1689.

***Source Book for Limiting Exposures to Startup Oxidants,* EPRI Report TR-112967, September, 1999.**

Abstract: This Source Book provides background information regarding possible effects of oxidants present during and immediately after startups on intergranular attack/stress corrosion cracking (IGA/SCC) and other modes of corrosion in steam generators with mill-annealed alloy 600 tubing. To minimize corrosion of steam generator tubes, the book suggests techniques utilities can consider in their efforts to limit exposure to oxidants during startups.

Background: Many steam generators with mill-annealed alloy 600 (600MA) tubes continue to experience significant rates of IGA/SCC. Such cracking occurs despite water chemistry improvements covered in the PWR Secondary Water Chemistry Guidelines, including very low impurity ingress, molar ratio control, high hydrazine concentrations, and advanced amines. This experience indicates that some factor involved in IGA/SCC lacks sufficient control (despite compliance with the Guidelines) and that further improvements in secondary water chemistry control may be desirable. Reviews of laboratory and plant experience indicate that oxidizing conditions during startups may be such a factor.

Objectives:

- To provide utilities with information related to sources of oxidants in steam generators during and following startups.
- To briefly review possible effects of these oxidants.
- To describe approaches, principles, and methods that have been or could be used to limit exposure to startup oxidants.

Approach: The project team (1) reviewed laboratory data to determine if startup oxidants are an important factor in IGA/SCC, then (2) gathered and evaluated plant experience to determine if it provides support for their hypothesis. (3) Based on their information, the team drafted a set of guidelines and (4) reviewed them with industry experts. Step (2) involved meeting with utilities and vendors in several countries to discuss their work and experience, then conducting a workshop in January 1999 (TR-112815). Step (4) involved reviewing drafts of the Source Book at two meetings with an ad hoc committee of industry personnel, then discussing the book at the May 1999 meeting of the PWR Secondary Water Chemistry Guidelines Committee. At that meeting, the committee agreed to publish the Source Book.

Results: The Source Book describes laboratory and plant experiences that suggest limiting exposure to startup oxidants can be important for controlling IGA/SCC. It also describes principles, approaches, and elements that utilities can consider when developing plant-specific procedures for limiting exposure to startup oxidants. Additional supporting technical data—such as rates of oxidation and reduction of deposits of typical compositions and morphologies—is planned for a later revision of the Source Book.

EPRI Perspective: Management of IGA/SCC is primarily an economic issue—not a safety issue—since inspections and repairs assure that appropriate safety margins are maintained. Estimating the costs of the approaches discussed in this Source Book for limiting exposure to startup oxidants (with the objective of reducing rates of IGA/SCC) are relatively straightforward.

However, quantifying benefits in terms of reduced rates of IGA/SCC is difficult because effects of secondary-side chemistry on the rate of IGA/SCC are somewhat uncertain and can only be roughly estimated. Despite the somewhat uncertain economic benefit, it is important for utilities to evaluate the situation at their plants with regard to startup oxidants and to determine what additional actions, if any, are appropriate for their plant-specific situations. The information contained in the Source Book is expected to help utilities in these assessments and in the development of plans and procedures for limiting exposure to startup oxidants.

***Steam Generator Reference Book,* EPRI Report TR-103824-V1, R1, December 1994.**

Abstract: The Steam Generator Reference Book documents the state of the art in PWR steam generator technology, providing a comprehensive source for operators, owners, and designers of PWR nuclear power plants. The book summarizes pertinent steam generator operating issues and provides recommendations to improve operational efficiency. Information in the book represents 15 years of research and development activity over the course of several hundred research projects involving PWR steam generator issues.

Background: In 1977, EPRI established the Steam Generator Project Office in the Nuclear Power Division to manage research and development (R&D) leading to resolution of operational challenges associated with PWR steam generators. Under the charter of the Steam Generator Owners Groups I and II followed by the Steam Generator Reliability Project, EPRI staff worked on this project in conjunction with participating utilities. The results of this work have been documented in several hundred EPRI reports and papers. Additionally, research results from international associates have been incorporated with EPRI and U.S. utility results. Altogether, these activities have resulted in a significant increase in steam generator availability, and in a reduction in lost capacity due to forced outages.

Objective: To integrate and summarize current PWR steam generator technology; to recommend design, operating, and maintenance improvements that will increase plant availability and life.

Approach: EPRI editors arranged the R&D results by operational issue and assigned EPRI staff and key consultants/contractors to collect, organize, and write chapters relating to each issue. Specifically, chapters in the Steam Generator Reference Book address each of the known and anticipated steam generator challenges and the factors affecting them. Included are causes of steam generator unavailability as well as possible actions to minimize problems. For ease of retrieval, recommendations from all chapters are listed in Chapter 4. Each area/issue has been critically reviewed by the editors, EPRI staff, and other experts in the field.

Results: The Steam Generator Reference Book summarizes options and recommendations for improving the operating life of PWR steam generators. Options will be utility specific and will depend on such factors as the age of the plant, design/construction, plant siting, and utility policies. The book emphasizes a variety of damage forms, addressing environmental factors likely to accelerate or inhibit/control damage initiation and growth. Recommendations describe modifications to water chemistry control, corrosion inhibitor use, alloy selection, and nondestructive examination (NDE) methods. Bibliographies have been collected and organized for each operational issue. The guide includes discussions of the following specific areas: steam generator performance history, steam generator design, operational guidelines to minimize

corrosion, steam generator degradation, thermal and hydrodynamic analysis of steam generators, primary water stress corrosion cracking (PWSCC), tube support and tubesheet corrosion, tube wastage and phosphate secondary water chemistry, tube pitting, tube supports and tubesheet corrosion (alkaline denting), secondary-side intergranular attack (IGA) and stress corrosion cracking (SEC), intergranular corrosion of alloy 600 from caustic compounds, intergranular corrosion from acidic compounds, lead cracking of alloy 600, tube corrosion and wear, tube fretting and wear, tube fatigue, water chemistry control, ionic impurity control, water chemistry options, corrosion product control, material selection and alternative designs for steam generators, PWSCC remedies, NDE methods, and major steam generator repairs/replacement.

EPRI Perspective: The Steam Generator Reference Book, Revision 1, documents the state of the art at the time each chapter was written. The format of this edition has been revised since publication of the original document so that chapters can be updated as needed and inserted into binders. EPRI has used the recommendations in this reference book to help utility staff implement equipment modifications as well as changes in operation and maintenance practices. As a result of this work and complementary work by others in the field, the availability of PWR steam generators has risen dramatically.

***Steam Plant Surface Condenser Leakage Study Update,* EPRI Report NP-2062, May 1982. This item is out of print.**

Abstract: This report describes a study performed as a supplement to a previous Electric Power Research Institute study published in 1977. A survey was conducted of electric utilities to collect information about additional operating experience since the time of the earlier study and to investigate selected topics which were not covered at that time. The topics included in this report are: condensers in cooling tower service, performance of titanium and AL-6X tubes, condenser drain collection system and impingement baffle experience, very small condenser water leaks, and air in-leakage and deaeration in condensers.

Project Description: In late 1975 EPRI initiated a project that involved the collection and analysis of information on all aspects on design, operation, and maintenance affecting the reliability of large steam plant surface condensers. The study was completed in January 1977, and the results were published in EPRI Final Report NP-481 “Steam Plant Surface Condenser Leakage Study,” Volumes I and II. RP1778 examined several important condenser-related issues that were not resolved in the earlier study. This report describes the results of analyses made in two general categories:

- The performance of condenser materials for which limited experience data existed at the time of the first study.
- Certain aspects of condenser design, operation, and maintenance that were not treated extensively in the earlier study, but to which considerable industry attention has been directed in recent years (The impact of cooling towers on main condenser availability and the capability of condensers to provide oxygen-free condense are two examples).

Project Objectives: The overall objective of this project was to provide the electric utility industry with additional experience data to support decisions in specifying, selecting, and operating condensers. Specific objectives were to collect and analyze U.S. electric utility experience data with respect to:

- The performance of titanium and AL-6X stainless steel condenser tubes
- Cooling-tower use in main condenser circuits
- Tube-to-tubesheet joint leaks
- Condenser drain collection systems
- Condenser deaeration capabilities

Project Results: The major conclusions derived from this study can be summarized as follows:

- Titanium and AL-6X condenser tubing can be relied upon to perform quite satisfactorily in terms of corrosion-erosion resistance. However, caution must be exercised in the application of these materials to prevent the onset of other problems such as tubesheet pitting and excessive tube vibration.
- Stainless steel and 90-10 copper nickel tubing will give satisfactory performance in condensers that operate in conjunction with cooling towers, provided the makeup water is fresh.
- Although recirculating water pH transients occur frequently in condenser-cooling-tower circuits, their effect on condenser leak tightness is not significant.
- There is a need for system designers and condenser manufacturers to develop a means for accomplishing rapid reduction of dissolved oxygen in condensate on plant startup and for preventing increases during reduced-load operation.

As previously indicated, this project was initiated to improve the experience database available to those in the electric utility industry that are responsible for making key condenser decisions. This project report should prove to be a valuable reference of the numerous architect-engineer firms engaged in power plant design and material-selection activities as well as for power plant owners and operators concerned about the availability of the generating unit.

It should be noted that this report describes the results of only one condenser-related project undertaken by EPRI. For a comprehensive discussion of the full scope of related EPRI activities, the reader should refer to EPRI Special Report CS-1841-SR, “EPRI Condenser-Related Research Projects,” May 1981.

Symposium on State-of-the-Art Condenser Technology, EPRI Report CS-3344, December 1983. This item is out of print.

Abstract: Participants at this international meeting agreed that anticipated improvements in the design, operation, and maintenance of condensers should substantially reduce costly power plant availability and performance losses.

Background: As the size and complexity of power plants have increased during recent decades, so have condenser problems. Currently, such problems cause a 3.8% loss of plant availability and a 1.5 to 2% average loss of plant performance in both nuclear plants and fossil fuel plants over 600 MW. From 1979 through 1984, loss of plant availability due to condenser problems is estimated at $9 billion.

Objective: To provide a forum for utilities to learn about state-of-the-art condenser technology and exchange information with all segments of the condenser industry.

Approach: A symposium featuring speakers from the United States, Europe, Japan, Australia, Canada, and Mexico was held in Orlando, Florida, June 7–9, 1983. International representatives from utility companies, equipment manufacturers, architect-engineering firms, and academic research organizations were invited to contribute papers on all aspects of condenser technology, from overall design to specific materials and equipment.

EPRI Perspective: In addition to providing an international perspective on solutions to condenser problems plaguing the utility industry, the meeting helped to identify areas for further condenser research and development. For an overview of EPRI-sponsored research to date, see report CS-3196-SR, "EPRI Condenser-Related Research Projects," which summarizes 54 projects on condenser design, specification, technology, and biofouling control. A detailed review of biofouling appears in EPRI report CS-3343, "Symposium on Condenser Macrofouling Control Technologies: The State of the Art."

Key Points: Participants presented 26 papers on the following topics: condenser reliability and improvement, tube joints, condenser performance, related systems and components, operations and maintenance, and performance testing. Important conclusions of the symposium were:

- Many current condenser problems are the result of design trends that, during the past 25–30 years, have squeezed more and more tube surface into the condenser envelope.
- The three most prevalent condenser problems are tube failures, cooling water system fouling and/or blockage, and reduction in deaeration efficiency caused by air leakage and/or air removal equipment problems.
- Approaches to improving the steam side performance of condensers include developing a tube nest design that reduces air blanketing, installing air removal and deaeration devices, and researching tube bundle design.
- Approaches to improving condenser integrity and thus plant availability include (1) reducing cooling water in-leakage by improving the design of high-energy dumps and by carefully selecting both tube materials and the design of the tube to tube sheet joint and (2) reducing air in-leakage through better design and maintenance of condenser shells, makeup water systems, expansion joints, turbine seals, and valves.

C
ON-LINE WATERBOX TEST PROCEDURE

C.1 Purpose

The purpose of this procedure is to provide a safe and efficient method for conducting on-line leak testing of the main surface condenser tubes using sulfur hexafluoride (SF_6). Personnel responsible for performing the test should ensure that all procedural steps and safety precautions are explicitly followed. Equipment maintenance should be performed by qualified personnel only.

C.2 Safety Precautions

C.2.1 Electrical Circuits

Electrical voltages from plant 115 vac power sources are used by the test equipment. In addition, some surfaces will be thermally hot, so caution should be exercised when operating the equipment. Maintenance should be performed by qualified personnel only.

C.2.2 Compressed Gases

Sulfur hexafluoride is a liquefied gas with a vapor pressure of 300 psig (21 kg/cm^2) at 70°F (21°C). At elevated temperatures, such as those present in power plant turbine buildings, bottle pressures will rise to a maximum of 532 psig (37 kg/cm^2). Some commercially available SF_6 analyzers use hydrogen in the presence of a catalyst to combine with oxygen and thus remove the oxygen from the air being sampled. Because hydrogen is explosive in air at concentrations greater than 4%, the manufacturer's operational and maintenance instructions should be strictly followed. No smoking, welding, or open flames are permitted in the immediate area when connecting or disconnecting hydrogen supply lines or when performing analyzer maintenance.

C.2.3 Radioactive Material

Many commercially available SF_6 analyzers use an electron capture cell that contains a radioactive substance. In its sealed condition, this device poses no threat to human health or safety. Due to possible ingestion or inhalation of radioactive material, do **not** open the detector cell. It is also a requirement to perform a swipe survey of the cell every six months and report the results to the U.S. NRC Regional office [1].

C.3 Initial Conditions

Before equipment setup and testing begins, certain pretest plant parameters should be noted and recorded:

- **Turbine load %.** The percent turbine load should be recorded at the start of a test because changes in station output will affect the response time and the magnitude of leak indication. Therefore, if the power output is expected to change during the test, anticipate changes in test response characteristics as well.
- **Total off-gas flow rate (in SCFM).** Total off-gas flow rate is a necessary component in calculating the required SF_6 injection rate for the test.
- **Station chemistry.** Current chemistry levels for the hotwell, condensate, feedwater, or boiler should be gathered to ascertain the location and/or the severity of leakage. It is possible, however, that there are no chemical indications that suggest water chemistry trouble.
- **Related Equipment Status.** A list should be recorded of all related equipment that is not in service, or that is in service and should not be, during the test. The potential effect on plant performance and leak test responses should be considered.
  - Air-removal vacuum pumps/steam jet air ejectors
  - Circulating water pumps
  - Waterbox vacuum priming pumps
  - Waterbox lifting jets
  - Condenser tube cleaning systems
  - Air-removal pumps motive bleed air
- **Circulating cooling-water system pressure in psig or kPa**. This parameter is necessary to determine the SF_6 injection pressure to be used during the test.

C.4 Systems Integration and Setup

Section 6.4.3.12 of this report, “Systems Integration,” contains the necessary information for evaluation and selection of sampling and test-shot injection points and equipment setup area. Section 6.4.3, “Leak Detection Equipment,” provides details for all equipment assembly. Selection of on-line waterbox leak test injection locations is described in Section 6.5, “Overview of On-Line Condenser Tube Leak Testing.”

Perform "System Integration" Evaluation

1. Determine the sample point.
2. Install the sample point.
3. Determine the test equipment location.
4. Determine the test-shot location.
5. Install the flow meter at the test-shot location.

Assemble All Equipment as Outlined in Section 6.4.3

1. SF_6 analyzer
2. SF_6 gas release equipment
3. Sampling equipment
4. Test-shot equipment
5. SF_6 injection equipment
6. Communications
7. Strip-chart recorder

Review Section 6.5 "Overview of On-Line Condenser Tube Leak Testing"

1. Determine the SF_6 injection locations.
2. Calculate the station chemistry sensitivity.
3. Calculate the required SF_6 injection rate.

C.5 Equipment Startup

Analyzer Startup

The SF_6 analyzer should be operated in accordance with the related equipment-specific documentation.

Sampling System

1. Assemble the sampling system components.
2. Empty any accumulated water from the water trap.
3. Check the condition of the silica gel in the desiccant tower.
4. If the gel is blue or unused, it is suitable for use.
5. If the gel is pink or used, replace it before testing.
6. Start the sampling pump.

Air-Removal Equipment

1. Set the valves on the air-removal equipment as required to draw a sample stream of off-gas for analysis.
2. Check for changes in the analyzer background as a result of the addition of the off-gas sample. If changes occur, make the necessary adjustments to obtain peak analyzer performance.
3. Prepare the SF_6 release mechanism for testing by referencing the applicable operating manual.
4. Using the release mechanism, spray the analyzer and the sample system to check for air in-leakage of the test equipment system.

C.6 Perform Test Shot

1. Confirm that the flow meter valve is closed.
2. Open the selection condenser penetration root (isolation) valve.
3. Slowly open the flow meter valve to establish an in-leakage rate of 1 SCFM.
4. Perform a three-second test-shot injection. At the instant the injection is stopped, start timing. At the moment an analyzer response is detected, stop the elapsed time count.
5. Record the response time and the maximum response magnitude.
6. For a cascading-type air-removal system, a test shot is required for each condenser section.
7. Close the flow meter and penetration root valves.

C.7 On-Line Condenser Leak Testing

Three fundamental plant air-removal and circulating cooling water configurations dictate the procedure to be used for a condenser tube (on-line) leak test.

C.7.1 Once-Through Parallel Cooling-Water System

This system, described in Figure 6-15, requires a separate injection point for each waterbox inlet feeder. The off-gas should be sampled from a common discharge if the system has multiple condensers. While sampling the common off-gas, SF_6 is injected into each waterbox inlet feeder (one after the other) using the given procedure.

C.7.2 Serial Cooling-Water System with Discrete Air-Removal Systems

This system, described in Figure 6-16, requires one SF_6 injection point for each serial cooling water train in the system. An injection is made into one train while sampling the first condenser off-gas discharge. If there is no response, the sample line is transferred to the next condenser air-removal system, and another injection is made at the original point.

This progression is repeated until each condenser section has been sampled while injecting into the original circulation water train. When complete, the injection equipment is moved to the second serial cooling water train, and the sample progression is repeated. Most systems do not have more than two serial cooling water trains, but the test should continue until all circulating cooling water trains and condenser air-removal section combinations have been tested.

C.7.3 Series Cooling Water System with Nondiscrete Air-Removal System

In the configuration, the off-gas is sampled from only one common air-removal discharge point. Injections are required at the inlet of each condenser section as noted in Figure 6-17. Generally, the test should be started at the last (most downstream) condenser of the cooling water train. An injection should be made into each train of that condenser before moving to the next condenser upstream. Continue moving one condenser section at a time until all sections have been tested.

Note: All tests should begin with a 1 SCFM injection rate. If there is no indication of leakage, then the rate should be increased to the maximum calculated rate (Equation 6-3).

Also note that an injection flow meter is calibrated for air. In order to correct for SF_6, a multiplier of 0.47 (-1/2) must be applied to the indicated rate to obtain an actual rate. For example, an indicated injection rate of 10 SCFM is equivalent to an actual rate of ~5 SCFM. Pressure corrections should also be applied (consult the specific flow meter operation manual).

1. Connect the SF_6 injection line to the waterbox injection port

2. Open the SF_6 gas cylinder isolation valve.

3. Leak test the valve packing and line regulator with a liquid bubble-indicating solution such as Snoop.

    a. If there are no leaks, proceed to step 4.

    b. If there are leaks, close the cylinder valve and eliminate the leakage.

    c. Repeat step 3.

4. Confirm that the flow meter valve is closed, and open (clockwise) the line regulator pressurizing the system to 100 psig (7.0 kg/cm^2).

5. Leak test the regulator body, pressure gauge, and outlet fittings.

6. Confirm that the waterbox penetration root valve is closed, and then open the flow meter valve to pressurize the system.

7. Leak test all remaining connections. If at any time injection system leakage is detected, depressurize the system, repair the leaks, and retest for leakage.

8. Through the communications system, confirm with the analyzer operator that the proper injection and sampling point combination is being tested. The analyzer response should be stable with no background indications from previously leaking SF_6.

    a. If stable, continue with test.

    b. If not stable, wait for stabilization. If stabilization dose not occur within 30 minutes consult the troubleshooting section of the equipment manual.

9. Close the flow meter valve.

10. Set the line regulator to a pressure 75 psig (5.3 kg/cm^2) above the circulating water system pressure.

11. Open the waterbox penetration root valve.

12. Open the flow meter valve and set the SF_6 flow rate to the targeted rate. As the injection begins, report “injection on” to the analyzer operator, and begin timing the injection. The analyzer operator should note the “on” time with the chart recorder event.

13. During the injection, complete leak testing for all flow paths downstream of the penetration.

14. Continue the injection for 1.5 minutes. Report “injection off” to the analyzer operator, and close the flow meter valve.

15. Wait for approximately twice the test-shot response time. The distance upstream from the injection point to the tubesheet will determine the response time of a leak indication.

    a. If there is no response, increase the injection rate to the maximum calculated rate.

b. If there is a response, wait for clearout of the SF_6 and retest.

16. After all the condenser sections have been tested, close the SF_6 gas cylinder isolation valve and remove the regulator.

C.8 Equipment Shutdown

1. Close all air-removal sampling valves.
2. Turn off the sampling pump.
3. Secure the SF_6 release mechanism according to the manual.
4. Shut down the analyzer according to the manual.
5. Empty the water from the sampling water trap, and replace the silica gel in the desiccant tower.

C.9 Reference

1. United States Nuclear Regulatory Commission, Rules and Regulations, Title 10, Chapter 1, Code of Federal Regulations – Energy, Part 31.

D
AIR IN-LEAKAGE TEST PROCEDURES

D.1 Purpose

The purpose of this procedure is to provide a safe and efficient method for conducting a main surface condenser air in-leakage inspection using sulfur hexafluoride (SF_6) or helium. Personnel responsible for performing the test should ensure that all procedural steps and safety precautions are explicitly followed. Equipment maintenance should be performed by qualified personnel only.

D.2 Safety Precautions

D.2.1 Electrical Circuits

Electric voltages from plant 115 vac power sources are used by the test equipment. In addition some surfaces will be thermally hot, so caution should be exercised when operating the equipment. Maintenance should be performed by qualified personnel only.

D.2.2 Compressed Gases

Sulfur hexafluoride is a liquefied gas with a vapor pressure of 300 psig (21 kg/cm^2) at 70°F (21°C). At elevated temperatures, such as are present in power plant turbine buildings, bottle pressures will rise to a maximum of 532 psig (37 kg/cm^2). Some commercially available SF_6 analyzers utilize hydrogen in the presence of a catalyst to combine with oxygen and thus remove the oxygen from the air being sampled. Because hydrogen is explosive in air at concentrations greater than 4%, the manufacturer's operational and maintenance instructions should be strictly followed. No smoking, welding, or open flames are permitted in the immediate area when connecting or disconnecting hydrogen supply lines or when performing analyzer maintenance.

D.2.3 Radioactive Material

Many commercially available SF_6 analyzers use an electron capture cell that contains a radioactive substance. In its sealed condition, this device poses no threat to human health or safety. Due to possible ingestion or inhalation of radioactive material, do **not** open the detector cell. It is also a requirement to perform a swipe survey of the cell every six months and report the results to the U.S. NRC Regional office [1].

D.3 Initial Conditions

Before equipment setup and testing begins, certain pretest plant parameters should be noted and recorded:

- **Turbine load %.** The percent turbine load should be recorded at the start of a test because changes in station output will affect the response time and the magnitude of leak indication. Therefore, if the power output is expected to change during the test, anticipate changes in test response characteristics as well.
- **Turbine back pressure (in. Hg or kPa).** Because this measure of condenser performance can be affected by air in-leakage rates, it should be recorded for comparison to readings after leak repairs have been made.
- **Total off-gas flow rate (SCFM).** The off-gas flow rate provides a direct measure of air in-leakage. Comparison to off-gas flow rates after leak repairs will provide an indication of the effectiveness of the inspection.
- **Condensate dissolved oxygen (ppb).** Dissolved oxygen levels can provide an indication of the amount of condenser air in-leakage occurring below the hotwell condensate waterline. Even low rates of leakage in this area can have a substantial effect on dissolved oxygen levels.
- **Out-of-service equipment.** A list should be recorded of all equipment that is not in service during the test. The potential effect on plant performance and leak test responses should be considered.
  - Condensate pumps
  - Boiler-feed pumps
  - Air-removal vacuum pumps/steam jet air ejectors

D.4 Systems Integration

Section 6.4.3.12 of this report, " Systems Integration," contains the necessary information for evaluation and selection of sampling and test-shot injection points and equipment setup area. Section 6.4.3 "Leak Detection Equipment," provides details for all equipment assembly.

Perform "System Integration" Evaluation

1. Determine the sample point
2. Install the sample point.
3. Determine the test equipment location.
4. Determe the test shot location.
5. Install the flow meter at the test-shot location.

Assemble All Equipment as Outlined in 6.4.3

- SF_6 analyzer
- SF_6 gas release equipment
- Sampling equipment
- Test-shot equipment
- Communication
- Strip-chart recorder

D.5 Equipment Startup

Analyzer Startup

The SF_6 analyzer should be operated in accordance with the related equipment-specific documentation.

Sampling System

1. Assemble the sampling system components.
2. Empty any accumulated water from the water trap.
3. Check the condition of the silica gel in the desiccant tower.
4. If the gel is blue or unused, it is suitable for use.
5. If the gel is pink or used, replace it before testing.
6. Start the sampling pump.

Air-Removal Equipment

1. Set the valves on the air-removal equipment as required to draw a sample stream of off-gas for analysis.
2. Check for changes in the analyzer standing current (background) as a result of the off-gas sample. If changes occur, make the necessary adjustments to obtain peak analyzer performance.
3. Prepare the SF_6 release mechanism by referring to the applicable operating manual.
4. Using the release mechanism, spray the analyzer and the sample system to check for air in-leakage to the test equipment system.

D.6 Perform Test Shot

1. Confirm that the flow meter valve is closed.
2. Open the selected condenser penetration root (isolation) valve.
3. Slowly open the flow meter valve to a rate of 1 SCFM.
   Note: The Control Room must be notified prior to breaking the vacuum.
4. Perform a three-second test-shot injection. At the instant the injection begins, start timing. At the moment an analyzer response is detected, stop the elapsed time count.
5. Record the response time and the maximum response magnitude.
6. For a cascading-type air-removal system, a test shot is required for each condenser section.
7. Close the flow meter and penetration root valve.

D.7 Air In-Leakage Testing

1. Begin the leak search using the information found in Section 11.5.
2. Record all results on the plant-specific checklist, or use the chart recorder to temporarily note responses.

   Note: One of the more difficult leaks to detect is one that has occurred in the drain piping connecting glands to the condenser. Occasionally, these develop leaks at pipe joints or welds and even corrode through, sometimes because of flow-accelerated corrosion. In these cases, a leak might be identified by pressurizing these pipes using live steam supplied at a suitable pressure.

D.8 Equipment Shutdown

1. Close all air-removal sampling valves.
2. Turn off the sampling pump.
3. Secure the SF_6 release mechanism according to the manual.
4. Shut-down the analyzer according to the manual.
5. Empty the water from the sampling system water trap, and replace the silica gel in the desiccant tower.

D.9 Reference

1. United States Nuclear Regulatory Commission, Rules and Regulations, Title 10, Chapter 1, Code of Federal Regulations – Energy, Part 31.

D.10 Example of Typical Plant In-Leakage Checklist

Checklist for Unit #

 # 1 LP Turbine

Direction of test is clockwise starting at plant north.

INSPECTION AREAS	**LEAK LOCATION**	**LEAK MAGNITUDE INITIAL/REPAIRED**
1) North gland seal: (case, bolts, and joints) Area "A".	_____	_____/_____
2) LP horizontal joint: East side, areas "B" Through "I".	_____	_____/_____
3) Manways:		
NE & SE	_____	_____/_____
4) Lower case penetrations:		
A) Areas "B" through "E": Consist of: (2) 3/4 inch threaded valves (1) 3/4 inch temperature probe (1) 2 inch Hood Spray penetration (3) 3/8 inch valve taps	_____	_____/_____
B) Areas "F" through "I": Consist of: (2) 3/4 inch threaded valves (1) 3/4 inch temperature probe (1) 2 inch Hood Spray penetration (3) 3/8 inch valve taps	_____	_____/_____
5) South gland seal: (case, bolts, and joints) Area "J"	_____	_____/_____

Initials -_____

 # 1 LP Turbine (Cont.)

INSPECTION AREAS	LEAK LOCATION	LEAK MAGNITUDE INITIAL/REPAIRED
6) Rupture Disks:RD-1	_____/_____	
RD 1 through 4	RD-2_____	_____/_____
	RD-3_____	_____/_____
	RD-4_____	_____/_____
7) Crossover Penetration: Expansion joint and penetration flange.	_____	_____/ _____

 # 2 LP Turbine

8) North gland seal: _____ _____/ _____
(case, bolts, and joints)
Area "A".

9) I.P horizontal ioint: _____ _____/ _____
East side, areas "B"
Through "I"

10) Manways: _____ _____/ _____
NE and SE

11) Lower case penetrations: _____ _____/ _____

A) Areas "B" through "E"
Consist of :
(2) 3/4 inch threaded valves
(1) 3/4 inch temperature probe
(1) 2 inch Hood Spray penetration
(3) 3/8 inch valve taps

B) Areas "F" through "I": _____ _____/_____
Consist of:
(2) 3/4 inch threaded valves
(1) 3/4 inch temperature probe
(1) 2 inch Hood Spray penetration
(3) 3/8 inch valve taps

Initials -_____

 # 2 LP Turbine (Cont.)

INSPECTION AREAS	LEAK LOCATION	LEAK MAGNITUDE INITIAL/REPAIRED
12) South gland seal: (case, bolts, and joints) Area "J"	_____	_____/ _____
13) Rupture Disks: RD-1	_____	_____/_____
RD 1 through 4	RD-2_____	_____/_____
	RD-3_____	_____/_____
	RD-4_____	_____/_____
14) Crossover Penetration: expansion joint and penetration flange	_____	_____/_____
15) LP horizontal joint: West side, areas "K" Through "P"	_____	_____/_____
16) Manways: SW & NW	_____	_____/ _____
17) Lower case penetrations::		
A) Areas "K" through "N" Consist of: (2) 3/4 inch threaded valves (1) 3/4 inch temperature probe (3) 3/8 inch valve taps	_____	_____/_____
B) Areas "O" through "R" Consist of : (2) 3/4 inch threaded valves (1) 3/4 inch temperature probe (3) 3/8 inch valve taps	_____	_____/_____

Initials -_____

 # 2 LP Turbine (Cont.)

INSPECTION AREAS	LEAK LOCATION	LEAK MAGNITUDE INITIAL/REPAIRED
18) LP horizontal joint: West side, areas "K" through "P"	_____	_____/ _____
19) Manways: SW & NW	_____	_____/_____
20) Lower case penetrations:		
A) Areas "K' through 'N': Consist of: (2) 3/4 inch threaded valves (1) 3/4 inch temperature probe (3) 3/8 inch valve taps	_____	_____/ _____
B) Areas "O" through "R": Consist of: (2) 3/4 inch threaded valves (1) 3/4 inch temperature probe (3) 3/8 inch valve taps	_____	_____/ _____

Moisture Separator Heaters

21) MSR # 1 (North) Vent line valve #____ Drains	_____	_____/_____
22) MSR # 2 (South) Vent line valve #____ Drains	_____	_____/_____

Main Boiler Feed Pumps

23) BFP # 1 (North):):	_____	_____/_____
A) Inboard shaft seal assembly (North) :		
B) Outboard. shaft seal): assembly (South):	_____	_____/_____

Initials -_____

 # 2 LP Turbine (Cont.)

Main Boiler Feed Pumps (Cont.)

INSPECTION AREAS	**LEAK LOCATION**	**LEAK MAGNITUDE INITIAL/REPAIRED**
C) Turbine case joints:	_____	_____/_____
D) Rupture disk.	_____	_____/_____
E) Steam stop valve drains:	_____	_____/_____
24) BFP # 1 (South):	_____	_____/_____
A) Inboard shaft seal assembly (North) :		
B) Outboard. shaft seal): assembly (South):	_____	_____/_____
C) Turbine case joints	_____	_____/_____
D) Rupture disk.	_____	_____/_____
E) Steam stop valve drains:	_____	_____/_____

Initials -_____

E
CONDENSER CONFIGURATIONS AND AIR-REMOVAL EQUIPMENT

E.1 Commentary On Responses To EPRI Questionnaire

During the early part of this project, a questionnaire was prepared to identify the range of condenser configurations and the design of their associated air-removal equipment that had been installed in nuclear plants within the United States. The questionnaire also sought to identify the methods that had been adopted in each plant for locating the sources of air and water in-leakage.

These questionnaires were sent out to some 50 nuclear plants, and responses were received from 20. Although most were from PWRs, there were also responses from four BWRs and one CANDU plant. One of the responders also offered to forward the questionnaire to the fossil plants in their organization, and responses were received from 12. An analysis of these results is contained in Tables E-1 through E-4, and it can be seen that they cover a broad spectrum of possible equipment configurations. The responses from these plants were grouped into the following four categories:

- Table E-1 Nuclear plants with steam jet air ejectors (SJAEs)
- Table E-2 Nuclear plants with liquid ring vacuum pumps (LRVPs)
- Table E-3 Fossil plants with steam jet air ejectors (SJAEs)
- Table E-4 Fossil plants with liquid ring vacuum pumps (LRVPs)

E.2 Plants with Steam Jet Air Ejectors (SJAE)

For plants that use steam jet air ejectors as their primary means for air removal (Tables E-1 and E-3), these tables contain 13 columns, identified as follows:

1. Condenser manufacturer (FW = Foster Wheeler, IR = Ingersoll Rand, BLH = Baldwin Lima Hamilton, W = Westinghouse, MHI = Mitsubishi)

2. Number of condenser compartments

3. Configuration of the water path—whether once-through, or two-pass, or flowing sequentially from compartment to compartment. One is shown as having continuous tubes running through all three compartments.

4. Whether a PWR, BWR, or CANDU reactor

5,6,7 Back pressure in each compartment. Where available, the design back pressure for each compartment is stated.

8. Number of SJAEs

9. Number of stages for each SJAE

10. SCFM for each SJAE

11. Dissolved oxygen concentration

12. Tracer gas employed for leak detection

13. Comments

E.3 Plants with Liquid Ring Vacuum Pumps (LRVP)

For plants that use liquid ring vacuum pumps as their primary means for air removal (Tables E-2 and E-4), these tables contain 12 columns. Columns 1–7 are the same as the SJAE plants. Columns 8–12 are as follows:

8. Number of liquid ring vacuum pumps (LRVPs)

9. SCFM for each LRVP

10. Dissolved oxygen concentration

11. Tracer gas employed for leak detection

12. Comments

E.4 Nuclear Plants

Column 4 in Tables E-1 and E-2 identifies whether the units are designed as pressurized water reactors (PWRs) or boiling water reactors (BWRs). Section 8 includes a discussion on the dissolved oxygen (DO) levels that are acceptable for each type of reactor. PWRs tend to operate below 10 ppb, while BWRs tend to operate at more than 20 ppb, although their DO can rise as high as 200 ppb in some cases. Table E-1 shows this distinction with the PWRs operating at well below the 10 ppb referred to above.

There is a wide variety of condenser configurations but no general rules; and while the most common SJAE configuration has two two-stage ejectors, other ejector configurations have also seem to have been chosen. Several plants, while relying on SJAEs as the primary source of air removal, have indicated that they use LRVPs during startup only, but that often these pumps cannot be used when the load rises above 5% of full load.

Almost all the PWR plants using LRVPs as their only air-removal equipment have three-compartment condensers; there were no BWRs in this category.

All the nuclear plants use tracer gas methods for in-leakage detection, but in some cases, plastic wrap and foam are shown as alternative leak detection methods.

E.4.1 Other Comments

Most plants acknowledged dissolved oxygen as being the principal concern resulting from air in-leakage, rather than excess condenser back pressure. Excess off-gas flow resulting from air in-leakage also caused problems with the off-gas desiccant bed.

One plant noted using 12 SCFM of nitrogen injection as the means for controlling the level of dissolved oxygen. The total vacuum pump load of 45 SCFM consisted of the 12 SCFM of nitrogen, 15 of SCFM vacuum pump seal leakage, and 18 SCFM of air in-leakage.

SJAE instability caused loss of the intercondenser loop seal and required that the equipment be operated in a stable condition for at least one hour in order to ensure that the loop could be maintained.

One plant found that the air-removal lines had a tendency to flood and required that drains be added. Another reported finding cracks in the stainless steel expansion bellows installed in an air-removal line. Although air in-leaks as large as 100 SCFM were the result, they were difficult to locate until the presence of the expansion bellows was identified and then subjected to testing.

In one plant, if the circulating water flow rate was too great for the amount of latent heat that had to be removed, the efficiency of the air-removal equipment was affected. However, throttling back the circulating water flow resulted in a back pressure improvement of 0.5 in. Hg (1.7 kPa).

E.5 Fossil Plants

The analysis of the responses from fossil plants is summarized in Tables E-3 and E-4.

Most of the twelve fossil plants that responded rely on LRVPs for air removal; only two have SJAEs as their primary air-removal equipment. The dissolved oxygen level in most of the plants is very low (< 10 ppb), but two plants report running at much higher levels.

Most plants report using helium as the preferred tracer gas for in-leakage detection, but some also use plastic wrap or foam to locate the source of leaks.

E.5.1 Other Comments

Almost all fossil plants are monitoring the air in-leakage (or off-gas flow) rate, as well as the dissolved oxygen concentration in the hotwell condensate or boiler feedwater. One plant also

monitored the hotwell temperature versus the vacuum pump suction to indicate if the vacuum had become air bound.

A plant that was equipped with two condenser compartments and two LRVPs normally ran with one pump connected to both shells. However, with the rising circulating water temperatures during the summer months, one pump was connected directly to each shell, and the pumps operated in parallel.

Only one plant reported running with an air in-leakage of less than 1 SCFM/100 MW. They also reported using RTV to seal leaks that were difficult to access.

Table E-1
Nuclear Plants with SJAEs

	1	2	3	4	5	6	7	8	9	10	11	12	13
Plant Name	Cond. Mfr.	No. of Comp.	Water Path	PWR/ BWR	Back Pressure C1	Back Pressure C2	Back Pressure C3	No. SJAEs	No. Stages	SCFM	DO Concen.	Tracer Gas	Comments
Browns Ferry	FW	3	Once through	BWR	2	2	2	2	3	20–40	56 (#2) 90 (#3)	He	2 LRVP 1700 SCFM
Clinton	W	1	Once through	BWR	1.5	-	-	2	2	50	14	He	2-LRVP for startup
Darlington, Ont.	FW	3	Once through	CANDU	.92	.92	.92	2	2	75	1-3	He and SF_6	
Dresden	IR	3	Sequen tial	BWR	1.2	1.5	1.8	2	2	60.5	30-50	He and water fill	
Farley	W	2	Once through	PWR	3.19	3.19	-	2	2	20	<2	He and SF_6	
Ginna	W	2	Once through	PWR	1.35	1.35	-	4-prim 2-second	2	30	3	He	
Indian Point #3	FW	3	Once through	PWR	1.5	1.5	1.5	6	2-1st 1-2nd	20	<4 wint. <2 sum.	He plastic wrap	
North Anna	IR	2	Once through	PWR	2	2	-	2	2	12	1.2–4	He, SF_6 plastic wrap	
Oyster Creek	Worthing ton	3	Once through	BWR	1.49	1.49	1.49	3	2	30	20–50	He and SF_6	Also LRVPs
Songs	IR	2-LP 1-HP	Continu os tubes	PWR	1.5	1.89	1.5	5-1st 3-2nd	2	40	5	He and plastic wrap	1-LRVP for startup
Surry	IR	2	Once through	PWR	1.6	1.6	-	2	2	12.5	2–5	He, SF_6 plastic wrap	
Vogtle	IR	3	Two pass	PWR	3.8	3.8	3.8	2	2	60	1.8–3.0	He, SF_6 acoust	2-LRVP infrared

Table E-2
Nuclear Plants with LRVPs

	1	2	3	4	5	6	7	8	9	10	11	12
Plant Name	Cond. Mfr.	No. of Comp.	Water Path	PWR/ BWR	Back Pressure C1	Back Pressure C2	Back Pressure C3	No. Pumps	SCFM	DO Concen.	Tracer Gas	Comments
Arkansas Nuclear Unit #1	Senior	3	Once through	PWR	1	1	1	2	25	3.3	He and SF_6	
Arkansas Nuclear Unit #2	Thermal Eng.	3	Once through	PWR				2	25	2.4	He and SF_6	
Palo Verde	W	3	Sequential	PWR	2.56	3.25	4.28	4	45	3	He	
Sequoyah	IR	3	Once through	PWR	1.88	1.88	1.88	3	15	3-5	He and SF_6	
V.C. Summer	Senior Eng.	2	Sequential	PWR	2.1	2.9	-	3	20	5	He and SF_6	
Three Mile Island	IR	3	Cont. tubes	PWR	1.7	2.25	2.8	3	15	7	SF_6	Use nitrogen injection
Waterford Unit #3	South-west Eng.	3	Once through	PWR	3.34	3.43	3.43	3	1–25 and 2–40	5	He and SF_6	
Wolf Creek	Ecolaire	3	Sequential	PWR	2.06	2.56	3.22	3	35	2.9	He	

Table E-3
Fossil Plants with SJAEsTable

	1	2	3	4	5	6	7	8	9	10	11	12	13
Plant Name	Cond. Mfr.	No. of Comp.	Water Path	Center WB	Back Pressure C1	Back Pressure C2	Back Pressure C3	No. SJAE'S	No. Stages	SCFM	DO Concen.	Tracer Gas	Comments
Lovett (SENY)	W	1	Once through	N	1.72	-	-	2	2	12.5	2	He and plastic wrap	
McIntosh (Savannah)	FW	2	Sequential	N	3.314	Unkn-own	-	1	2	12.5	<1	He and plastic wrap	

Table E-4
Fossil Plants with LRVPs

	1	2	3	4	5	6	7	8	9	10	11	12
Plant Name	Cond. Mfr.	No. of Comp.	Water Path	Center WB	Back Pressure C1	Back Pressure C2	Back Pressure C3	No. Pumps	SCFM	DO Concen.	Tracer Gas	Comments
Bowen	W	2	Sequential	N	3.5	3.5	-	2	24	10	He foam	
Branch	FW	2	Sequential	N	1.7	2.3	-	2	25	<10	He and Water	
Daniel	Senior	2	Sequential	N	4.19	3.1	-	2	15	<5.0	He and plastic wrap	
Hammond	BLH	2	Sequential	N	4.12	2.89	-	1	?	<5.0	He	
Miller	South-western	2	Sequential	N	2.93	4.39	-	3	25	<20	He	
McDonough	FW	1	Once through	N	1.8	-	-	1	700	5-15	He	
Pagbilao	MHI	2	Once through	N	1.98	-	-	2	15	20.1	He and plastic wrap	
Scherer	FW	2	Sequential	N	2.59	3.9	-	3	30	5	He	
Jack Watson #4	IR	1	Once through	N	2.29	-	-	2	?	2	Foam	
Jack Watson #5	FW	2	Sequential	N	1.88	2.82	-	2	?	5	Foam	



WARNING: This Document contains information classified under U.S. Export Control regulations as restricted from export outside the United States. You are under an obligation to ensure that you have a legal right to obtain access to this information and to ensure that you obtain an export license prior to any re-export of this information. Special restrictions apply to access by anyone that is not a United States citizen or a Permanent United States resident. For further information regarding your obligations, please see the information contained below in the section titled "Export Control Restrictions."

Export Control Restrictions

Access to and use of EPRI Intellectual Property is granted with the specific understanding and requirement that responsibility for ensuring full compliance with all applicable U.S. and foreign export laws and regulations is being undertaken by you and your company. This includes an obligation to ensure that any individual receiving access hereunder who is not a U.S. citizen or permanent U.S. resident is permitted access under applicable U.S. and foreign export laws and regulations. In the event you are uncertain whether you or your company may lawfully obtain access to this EPRI Intellectual Property, you acknowledge that it is your obligation to consult with your company's legal counsel to determine whether this access is lawful. Although EPRI may make available on a case by case basis an informal assessment of the applicable U.S. export classification for specific EPRI Intellectual Property, you and your company acknowledge that this assessment is solely for informational purposes and not for reliance purposes. You and your company acknowledge that it is still the obligation of you and your company to make your own assessment of the applicable U.S. export classification and ensure compliance accordingly. You and your company understand and acknowledge your obligations to make a prompt report to EPRI and the appropriate authorities regarding any access to or use of EPRI Intellectual Property hereunder that may be in violation of applicable U.S. or foreign export laws or regulations.

About EPRI

EPRI creates science and technology solutions for the global energy and energy services industry. U.S. electric utilities established the Electric Power Research Institute in 1973 as a nonprofit research consortium for the benefit of utility members, their customers, and society. Now known simply as EPRI, the company provides a wide range of innovative products and services to more than 1000 energy-related organizations in 40 countries. EPRI's multidisciplinary team of scientists and engineers draws on a worldwide network of technical and business expertise to help solve today's toughest energy and environmental problems.

EPRI. Electrify the World

Program:

Nuclear Power

TR-112819

© 2000 Electric Power Research Institute (EPRI), Inc. All rights reserved. Electric Power Research Institute and EPRI are registered service marks of the Electric Power Research Institute, Inc. EPRI. ELECTRIFY THE WORLD is a service mark of the Electric Power Research Institute, Inc.

Printed on recycled paper in the United States of America

EPRI • 3412 Hillview Avenue, Palo Alto, California 94304 • PO Box 10412, Palo Alto, California 94303 • USA
800.313.3774 • 650.855.2121 • askepri@epri.com • www.epri.com